KS1250,1,2,3,6,7,8BEX
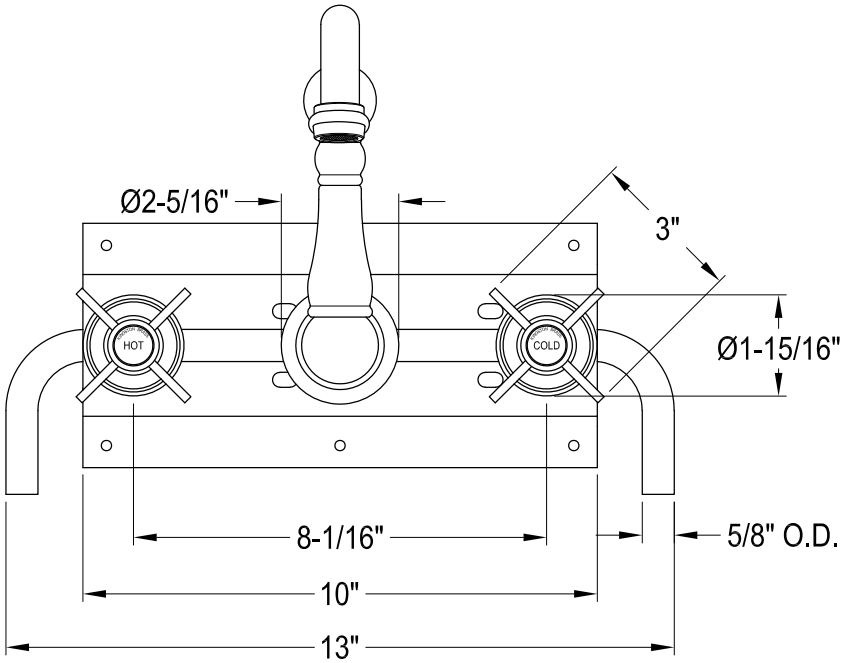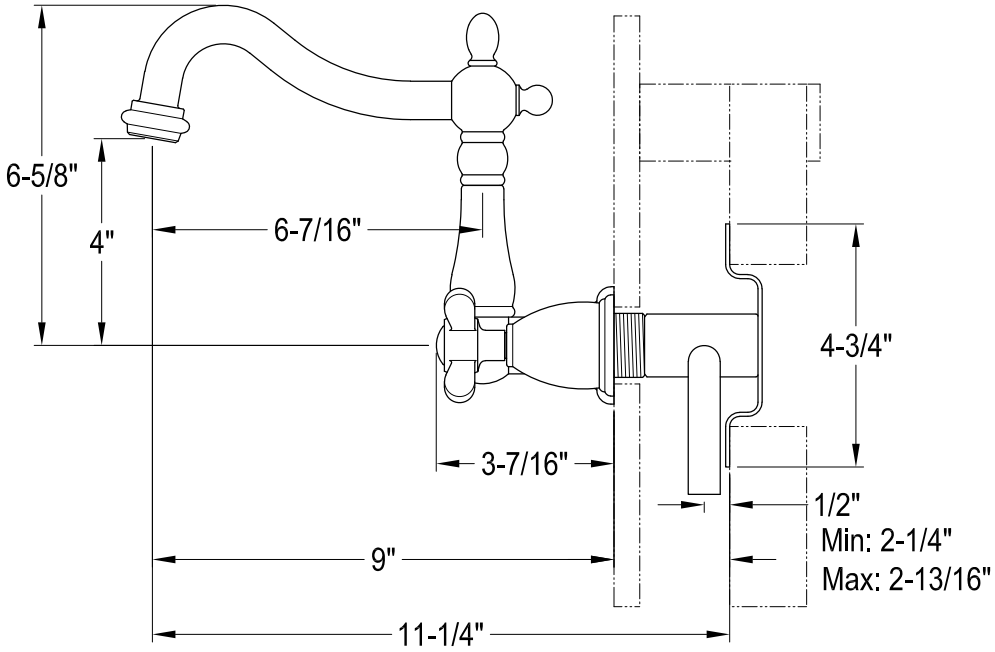
Twin Handles Wall Mount Bathroom Faucet