Voltaire

Drop-In Bathtub

SM-DB571

FEATURES:

- Easy-to-clean, high-gloss finish
- Fiberglass reinforced acrylic
- Adjustable feet
- Reversible drain

INSTALLATION:

Drop-In

COLORS & FINISHES:

☐ White: SM-DB571
■ Matte Black: SM-DB571MB

INCLUDED PARTS:

- Drop-In Bathtub: SM-DB571

SPECIFICATIONS:
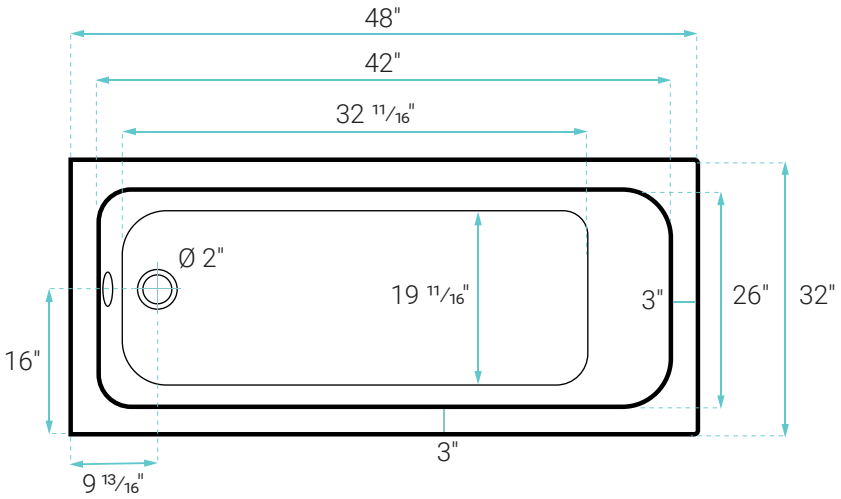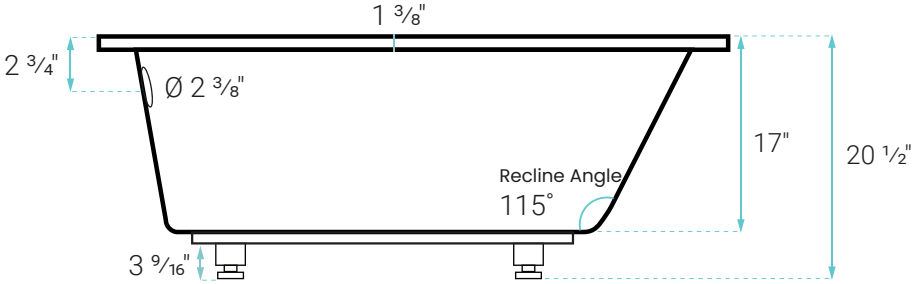
N.W: 30.86 lb.
L: 48" x W: 32" x H: 20 ½"
Soaking Depth: 12"