american drew
•inspired design•

Tel: 828-728-3261
www.americandrew.com

ASSEMBLY INSTRUCTIONS

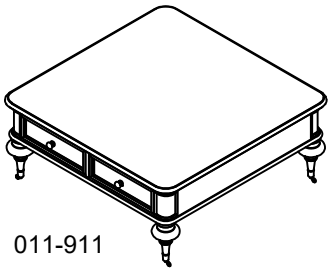

011-911

BEFORE YOU START:

1. Check the parts against the parts list to make sure all items are present.
2. Assemble your furniture on a soft, flat surface to avoid scratching the finish.
3. **CAUTION:** Do not over tighten screws, nuts or bolts during assembly.
4. Your furniture may require occasional tightening.

INSTRUCTIONS:

1. Attach the leg to table top. (See Figure 1).

Figure 1

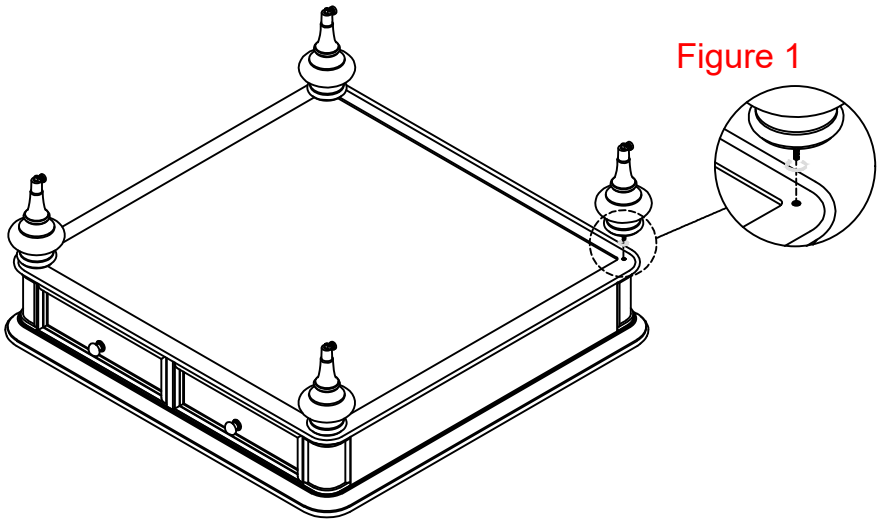

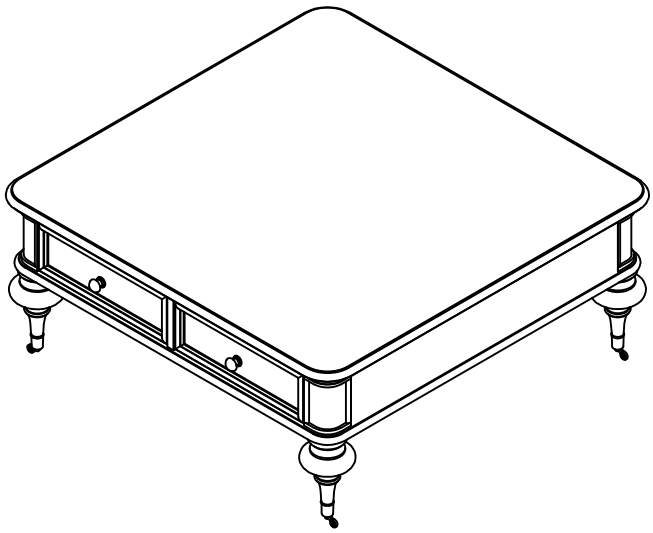

Thank you for purchasing furniture from american drew!