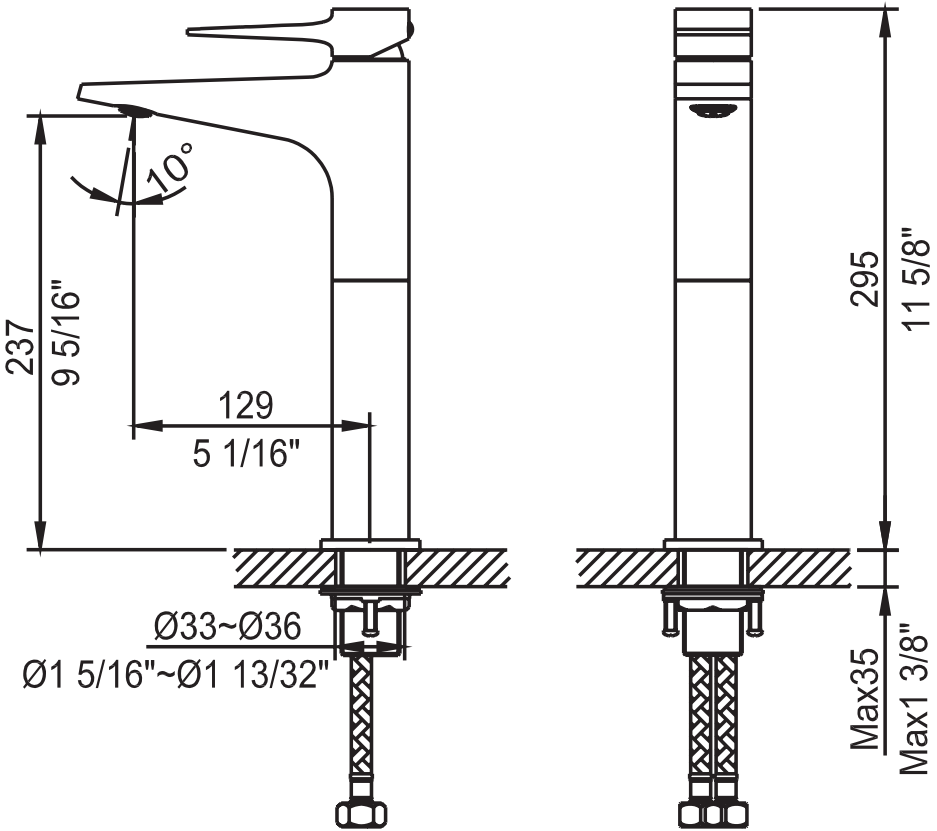
10°
237
9 5/16"
129
5 1/16"
Ø33~Ø36
Ø1 5/16"~Ø1 13/32"
295
11 5/8"
Max35
Max1 3/8"