ASSEMBLE Top Seat, Vertical and Cover 1in FRAME

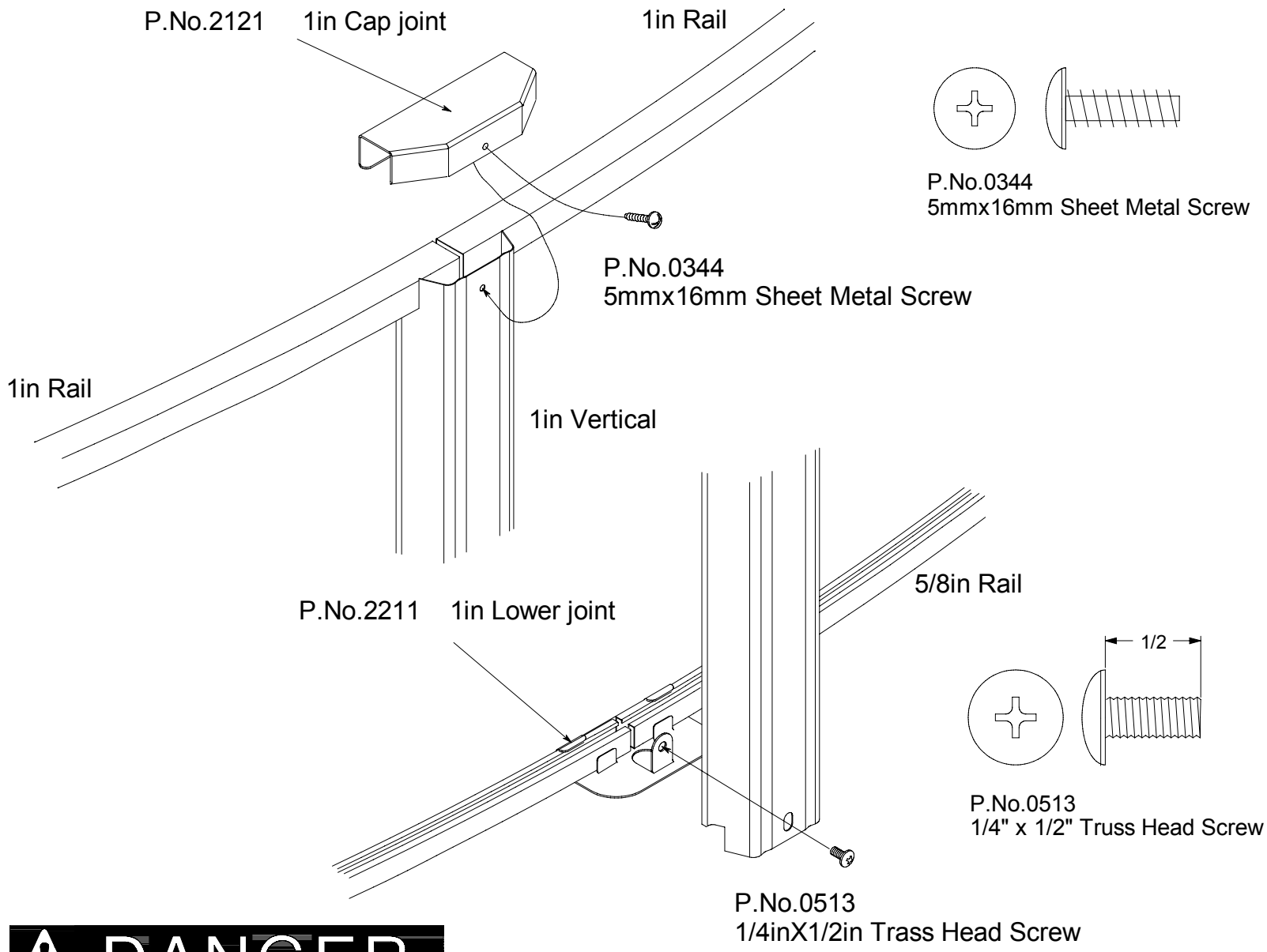

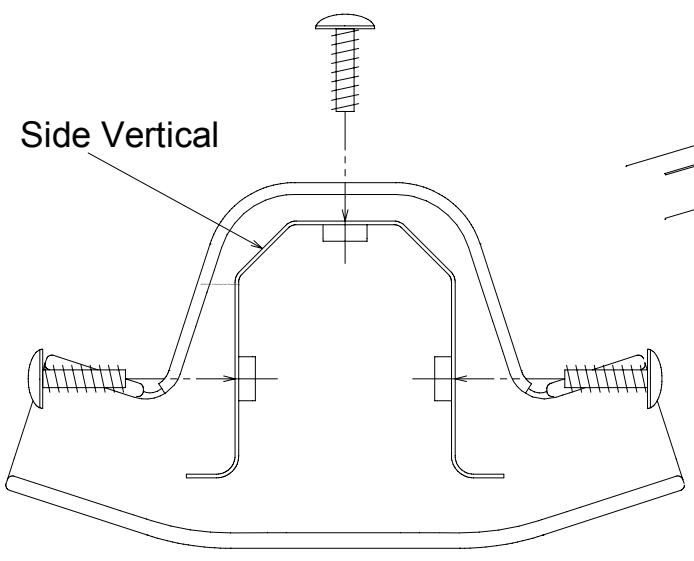

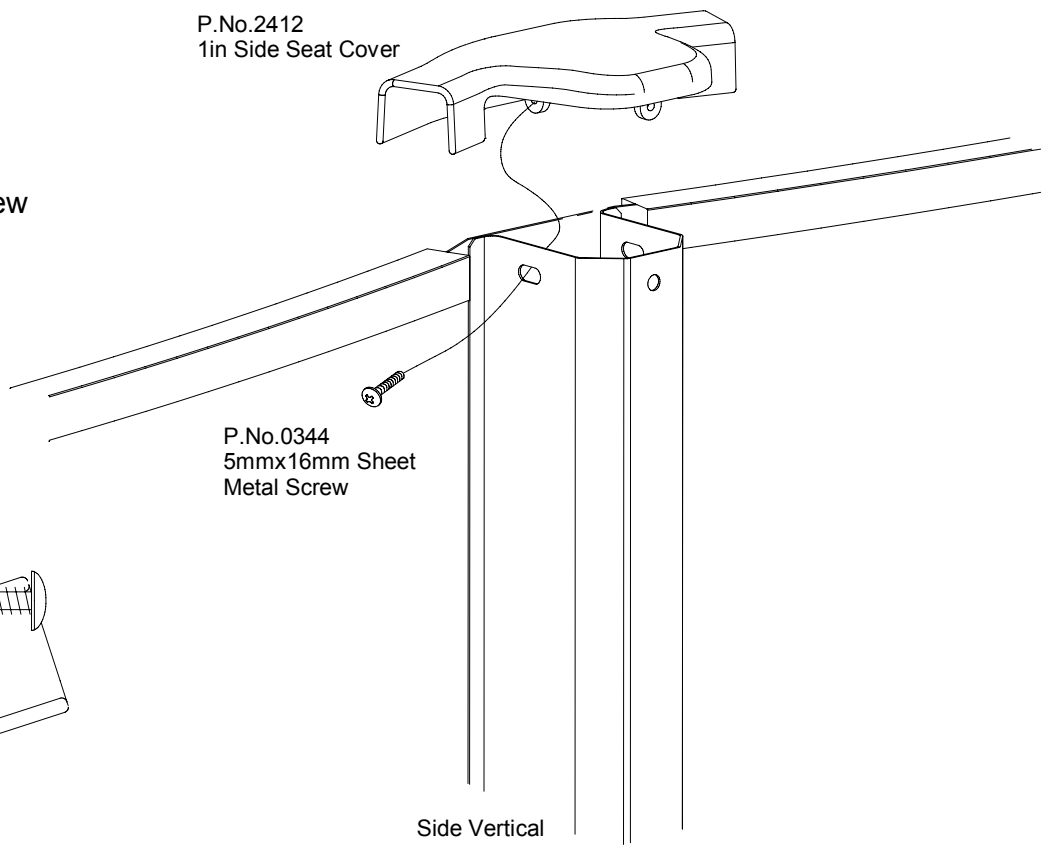

Printed in JAPAN Oct.2006