Concorde

Alcove Bathtub

SM-AB561

Swiss Madison®
well made forever

FEATURES:

- Easy-to-clean, high-gloss finish
- Fiberglass reinforced acrylic
- Integrated armrests
- 3-Sided flange
- Built-in apron
- Left-hand drain
- Slip-resistant floor

INSTALLATION:

Three-wall alcove

COLORS & FINISHES:

☐ White: SM-AB561

INCLUDED PARTS:

- Alcove Bathtub: SM-AB561

SPECIFICATIONS:
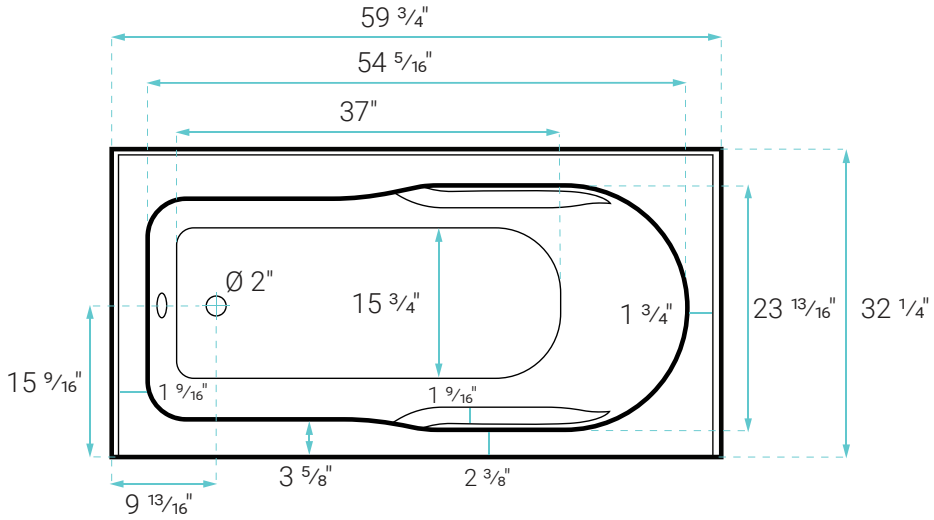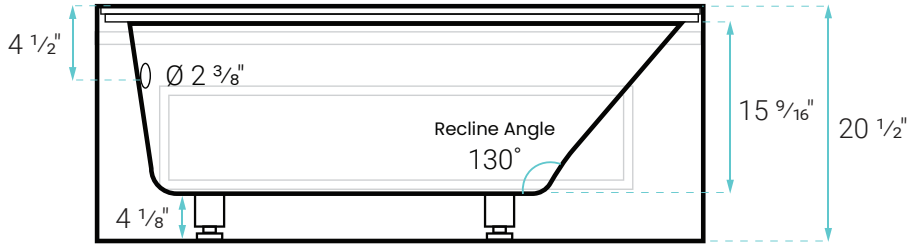
N.W: 52.91 lb.
L: 59 ¾" x W: 32 ¼" x H: 20 ½"
Soaking Depth: 12"