Char-Broil®

PLATINUM TRU-INFRARED™

ASSEMBLY INSTRUCTIONS

Estimated Assembly Time: 45 minutes

Model R67CC1518

CE 2531 CS 0004

P/N 80027340

22 PAP

Tools Suggeted:

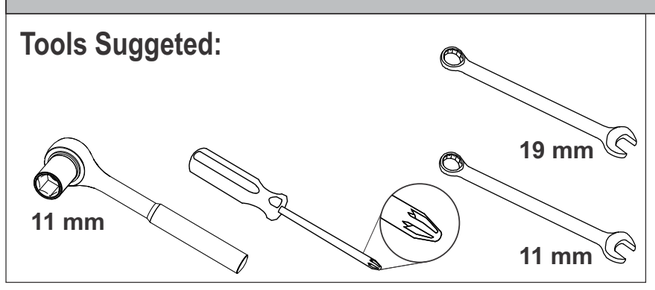

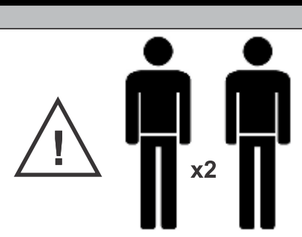

NOTE: Assemble your grill on a clean, level surface.

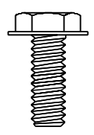

1/4-20x5/8" Hex Bolt - 51

#8-32x3/8" Screw - 16

Hose Clip - 1

1/4-20x1/2" Screw - 1

1/4-20 Nut - 1

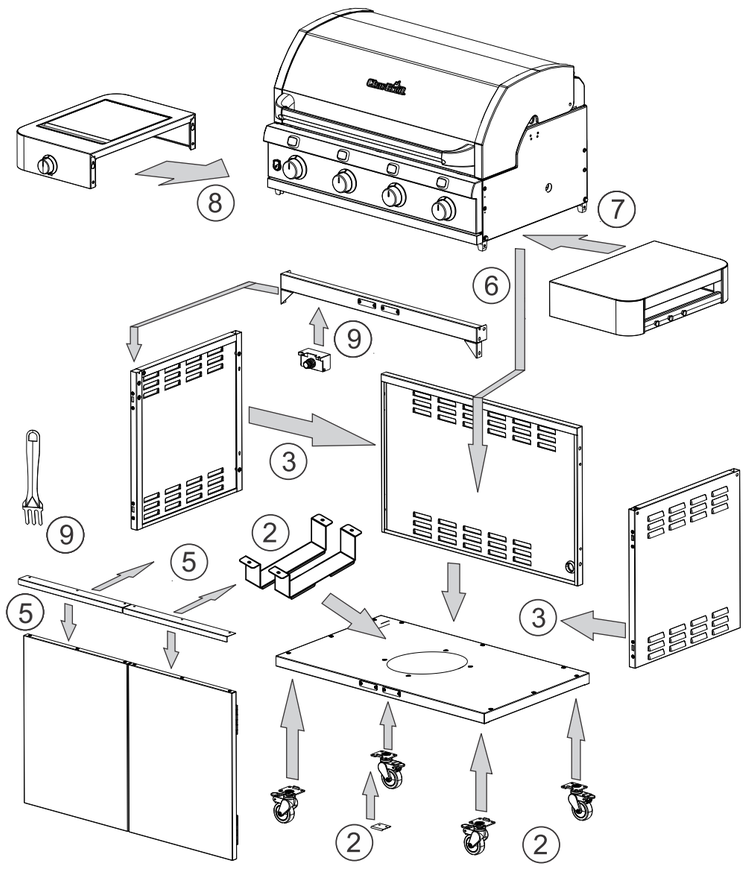

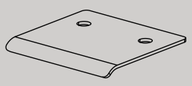

Door Closer Bracket - 1

Casters - 4

Ignition Module - 1

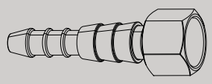

Universal Barb - 1

Door Handle - 2

Grate Cleaning Tool - 1

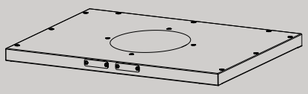

Bottom Shelf - 1

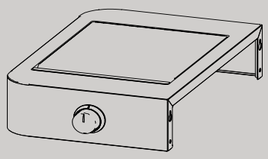

Side Burner Side Shelf - 1

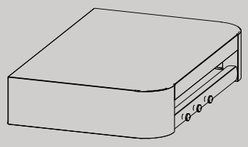

Side Shelf - 1

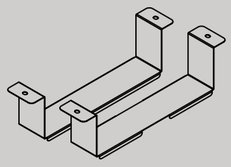

Tank Brackets - 2

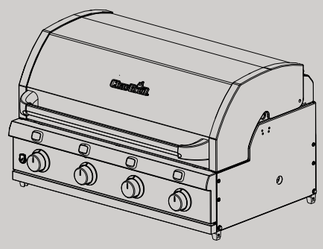

Firebox Assembly - 1

Front Door Brace - 1

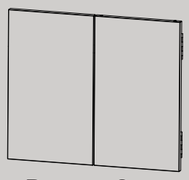

Doors - 2

Cart Panel - Left - 1

Cart Panel - Right - 1

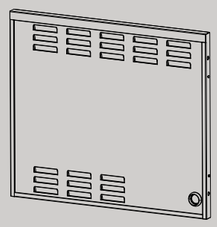

Rear Panel - 1

1

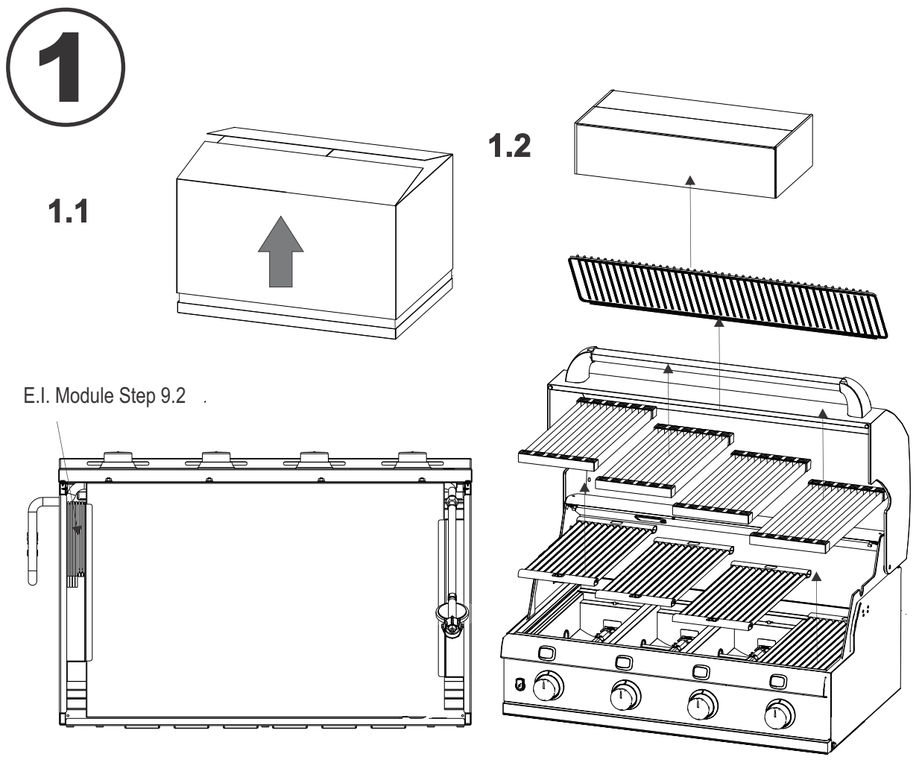

2

20 - 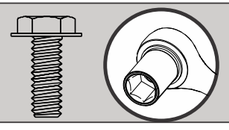

2 -

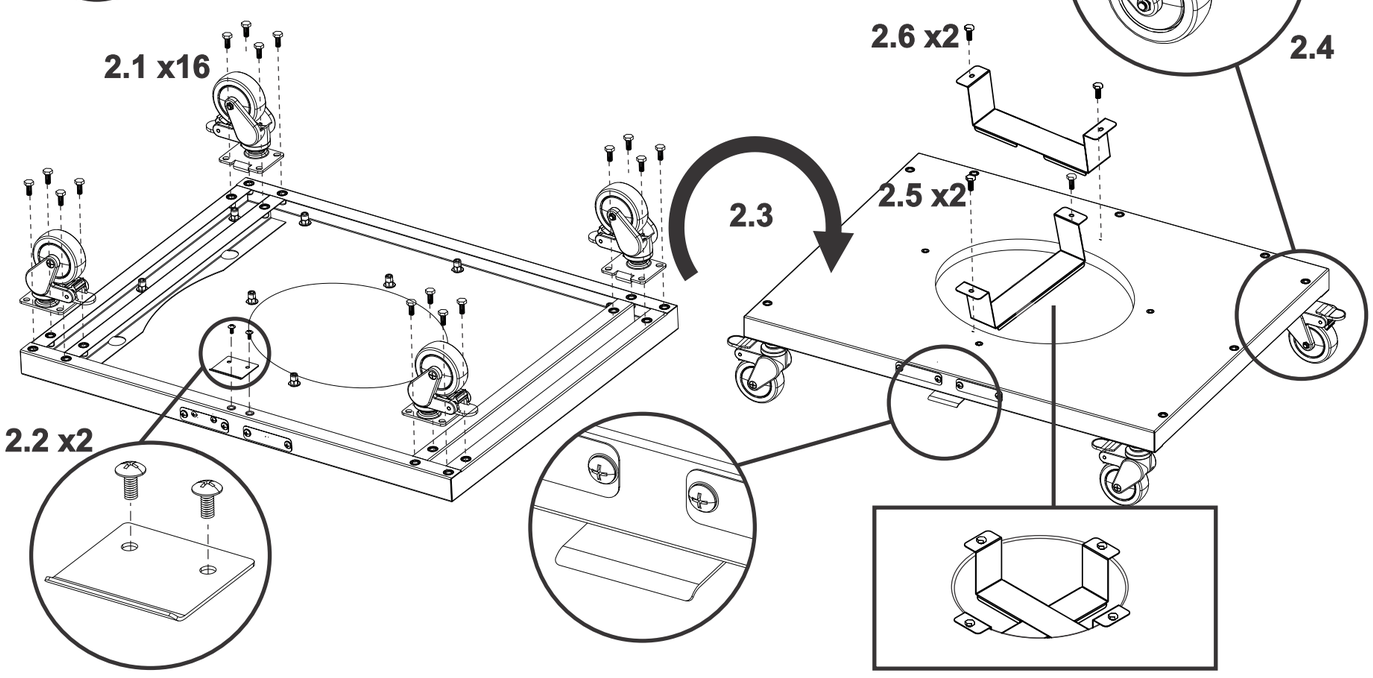

3

4 - 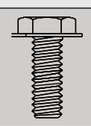

HAND TIGHTEN ONLY!

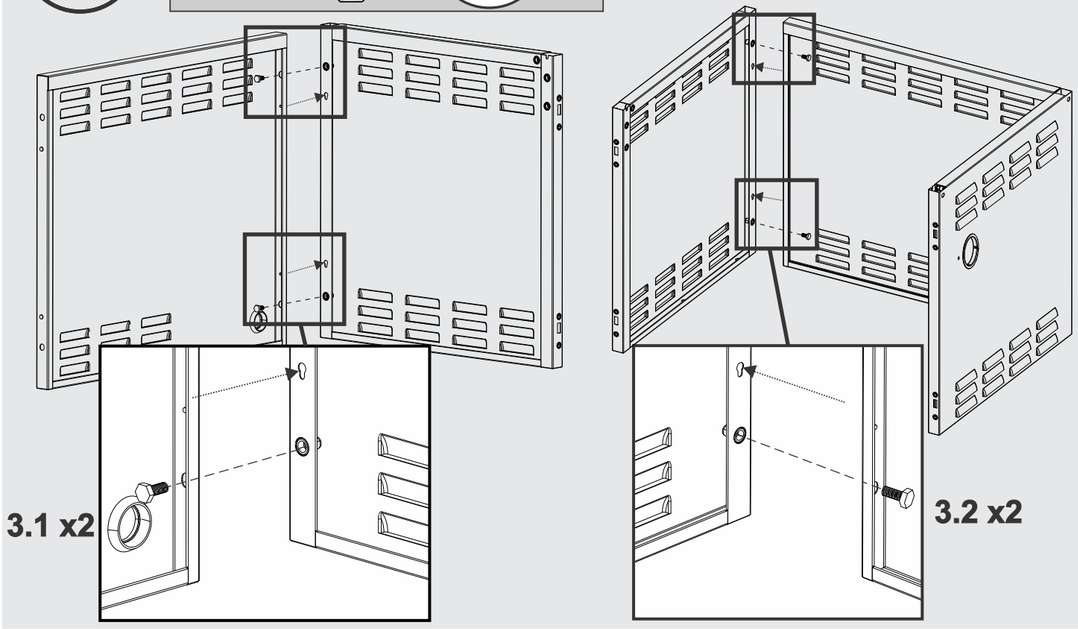

4

15 - 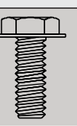

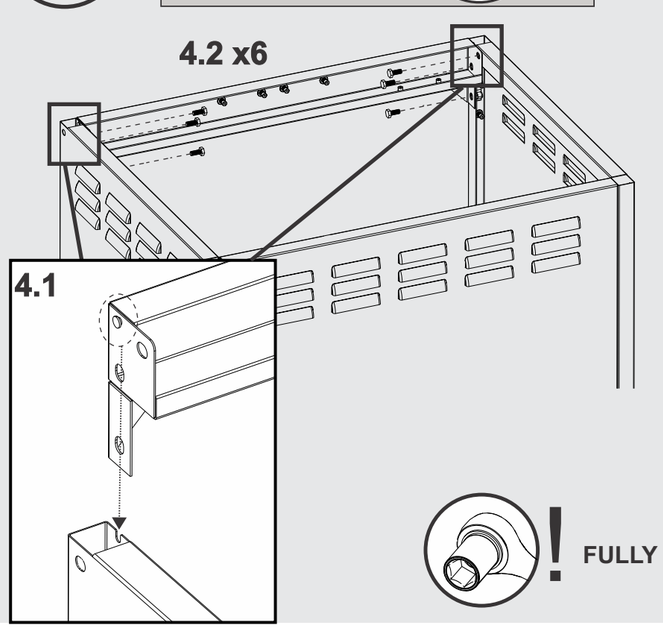

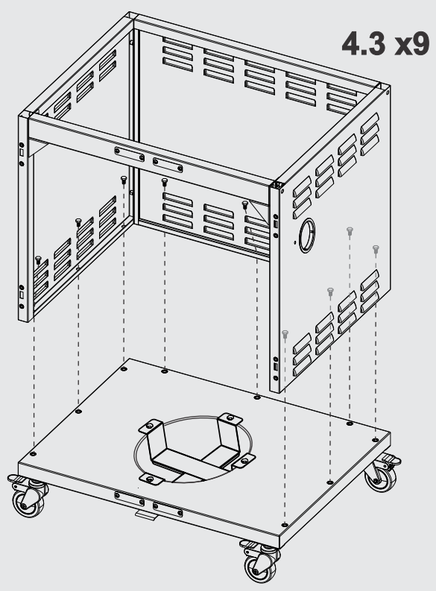

FULLY TIGHTEN ALL BOLTS AFTER 4.3

5

12 -

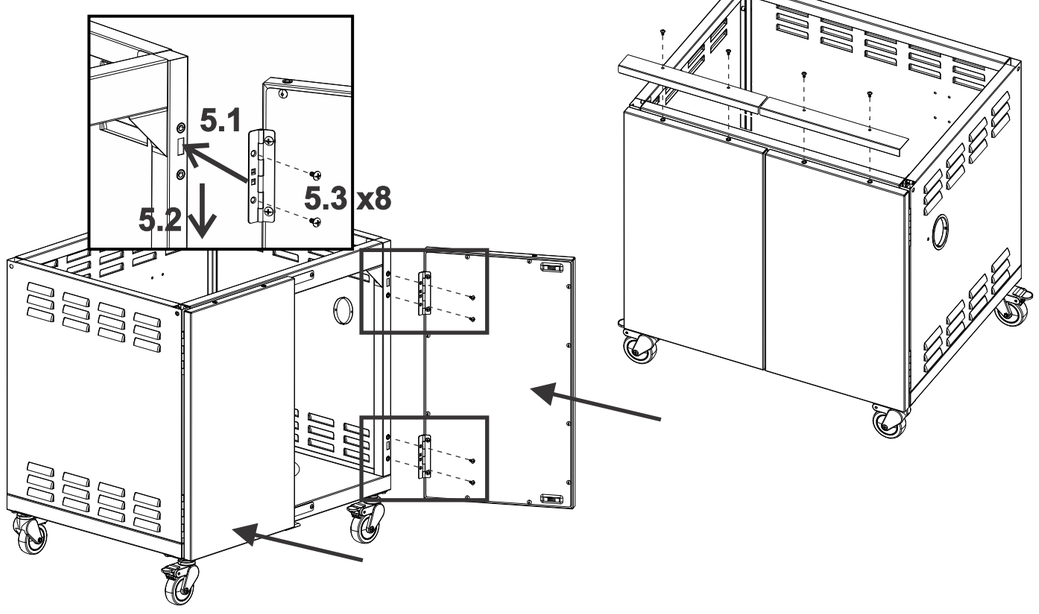

6

x2 4 -

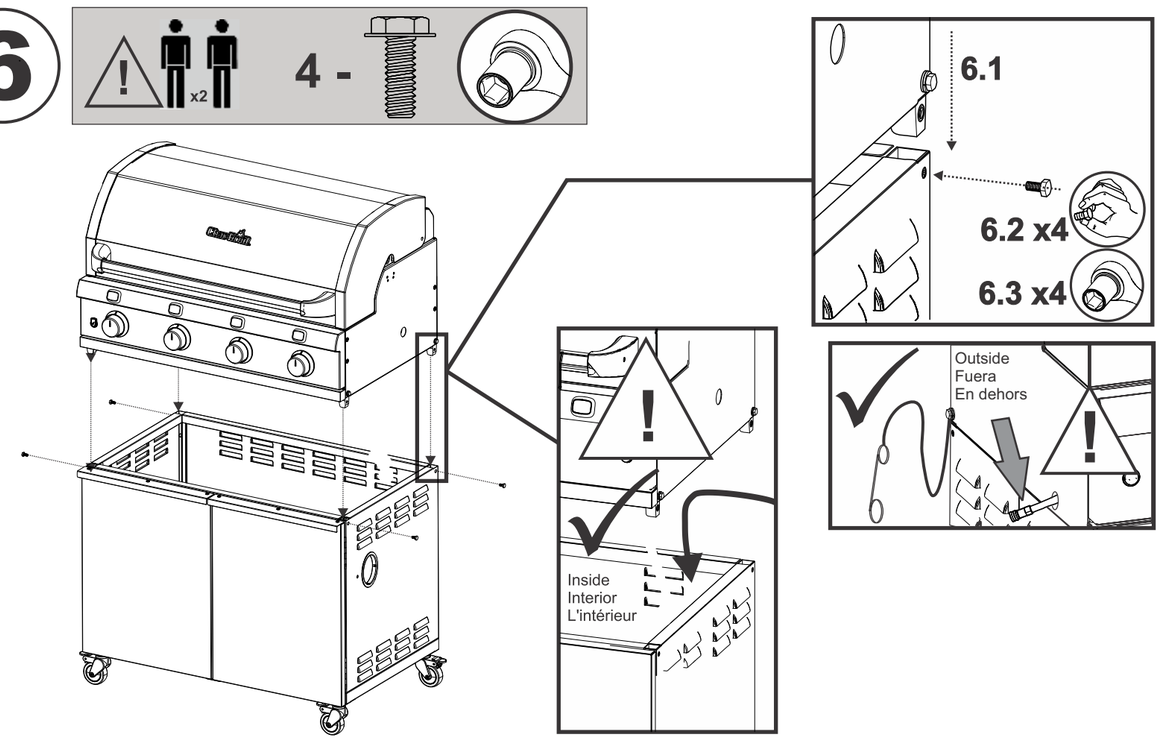

7

8 - 11 mm

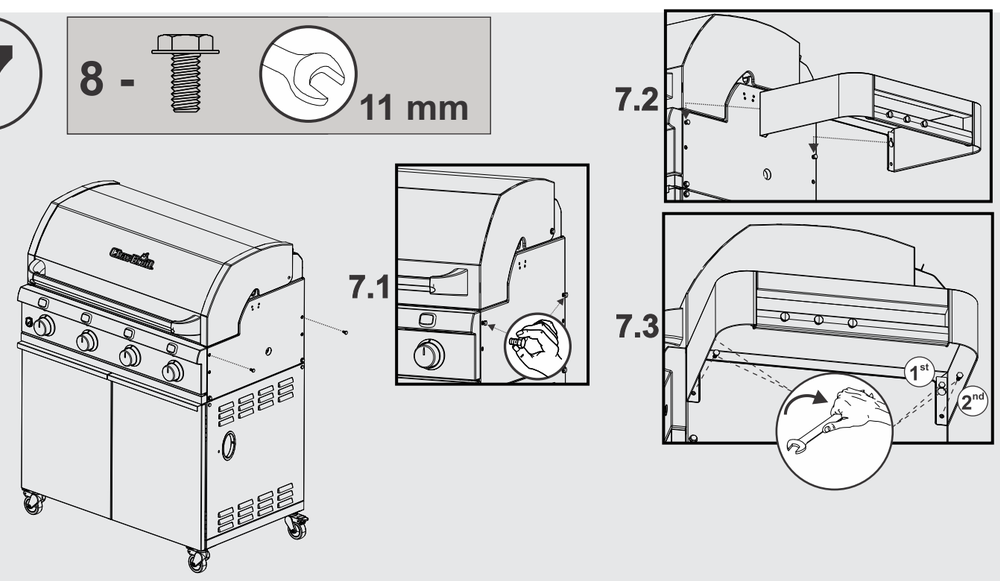

NOTE: Repeat for the LH side shelf.

8

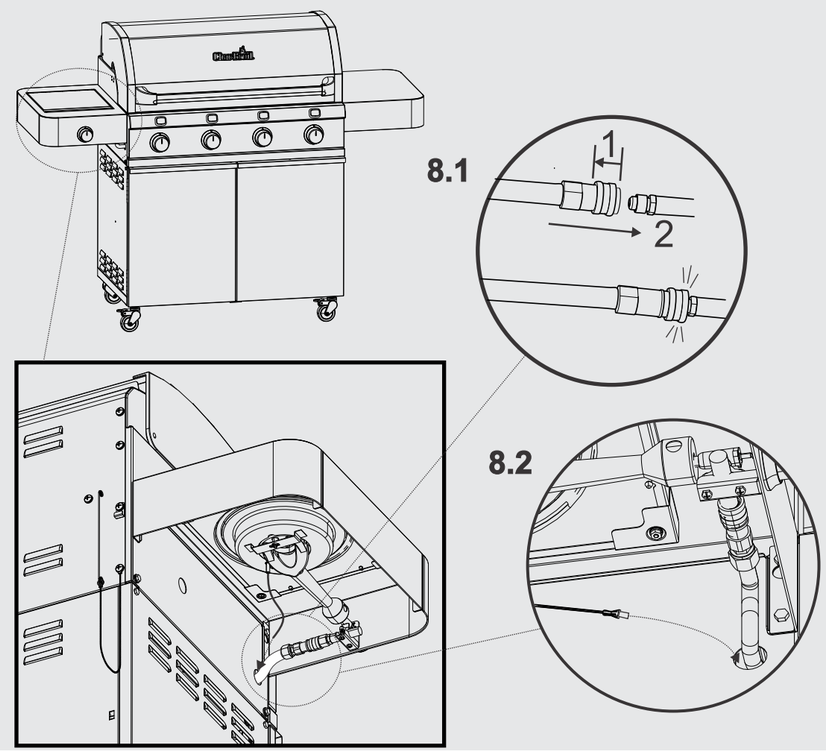

9

1 - 2 -

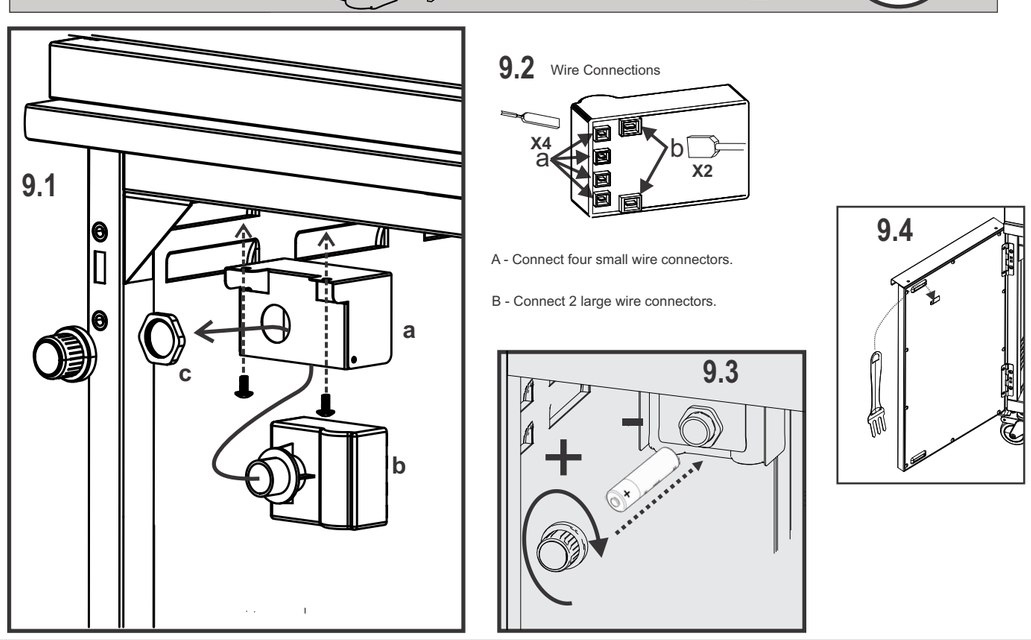

10

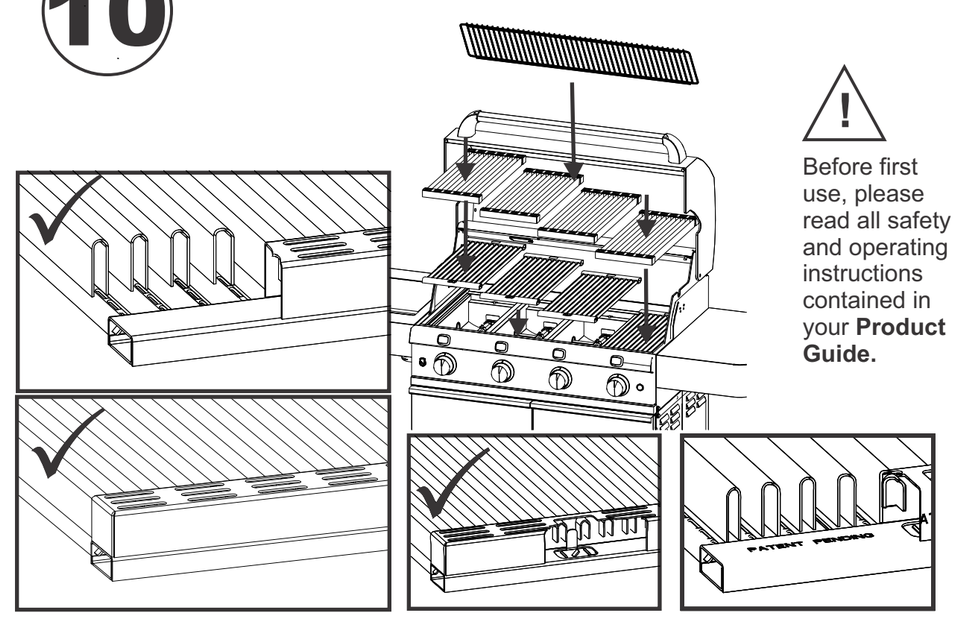

Before first use, please read all safety and operating instructions contained in your **Product Guide.**

11
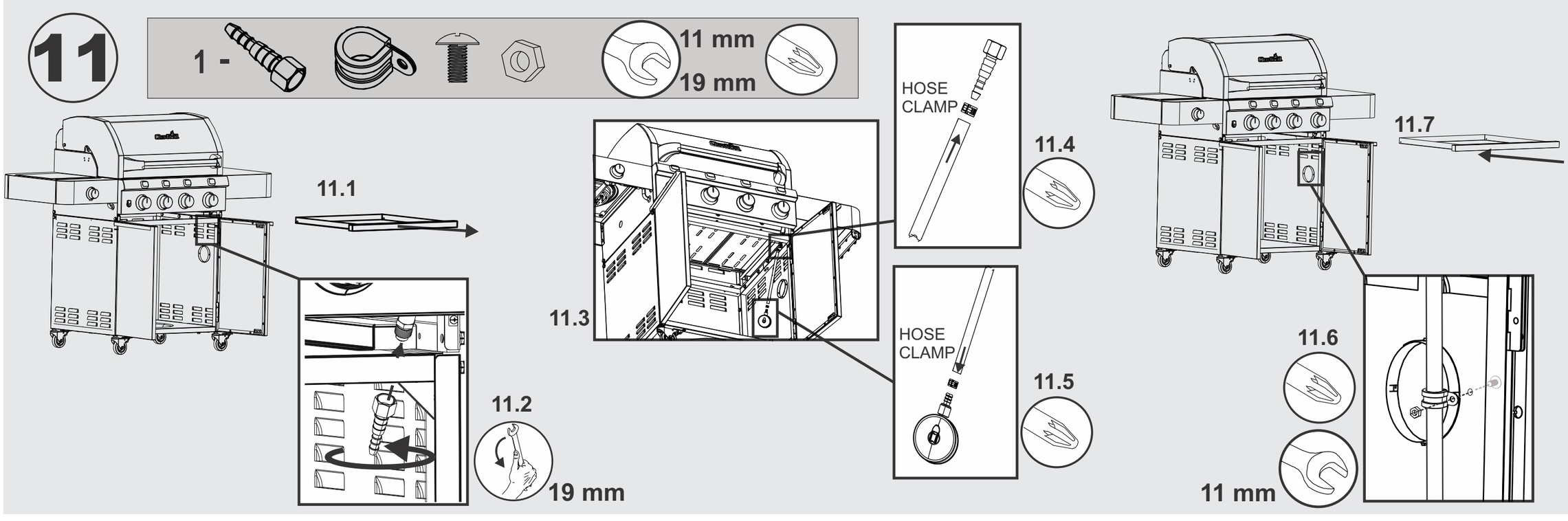
1 - 11 mm 19 mm