AXOR Starck Organic
Volume Control Trim 5" x 5"
Finishes : **chrome** Part no. : **12771001**

Description

Features
· Volume control for 1 outlet

Product image

Scale drawing

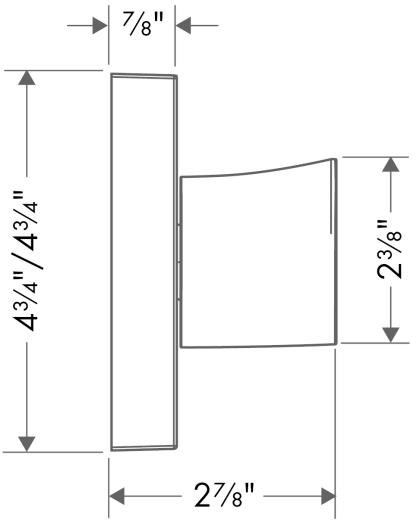

AXOR Starck Organic
Volume Control Trim 5" x 5"
Finishes : **chrome** Part no. : **12771001**

Exploded drawing

Year of production: **>03/13**

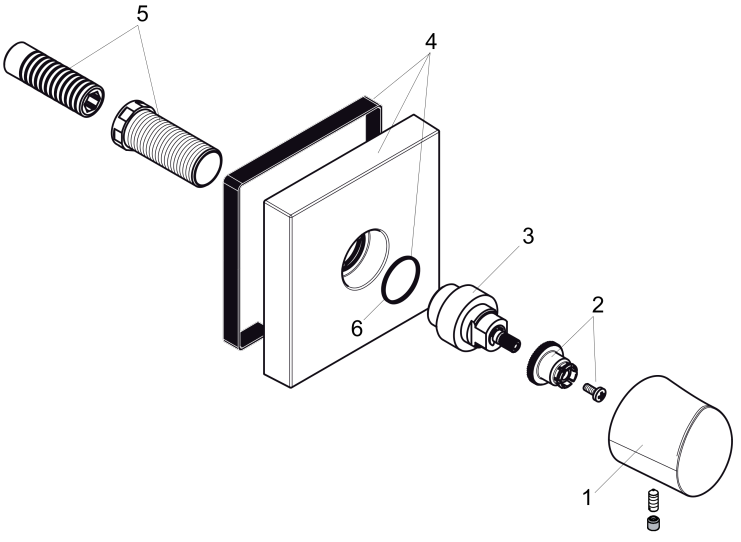

AXOR

AXOR Starck Organic
Volume Control Trim 5" x 5"
Finishes : **chrome** Part no. : **12771001**

Spare parts list

Year of production: **>03/13**

Pos.	Description	Part no.	PC	PU
1	handle	98312001	0	1
2	handle fixing set	94184000	0	1
3	adapter for handle	95153000	0	1
4	escutcheon	95358000	0	1
5	fixing set	96393000	0	1
6	O-ring 26x2	98147000	0	1
a	base body	10971181	0	1
b	base body	15974181	0	1
c	base body	15977181	0	1