LS8710,1,3,8CTLBS,CTLBSAB

Single Handle Kitchen Faucet with Brass Sprayer

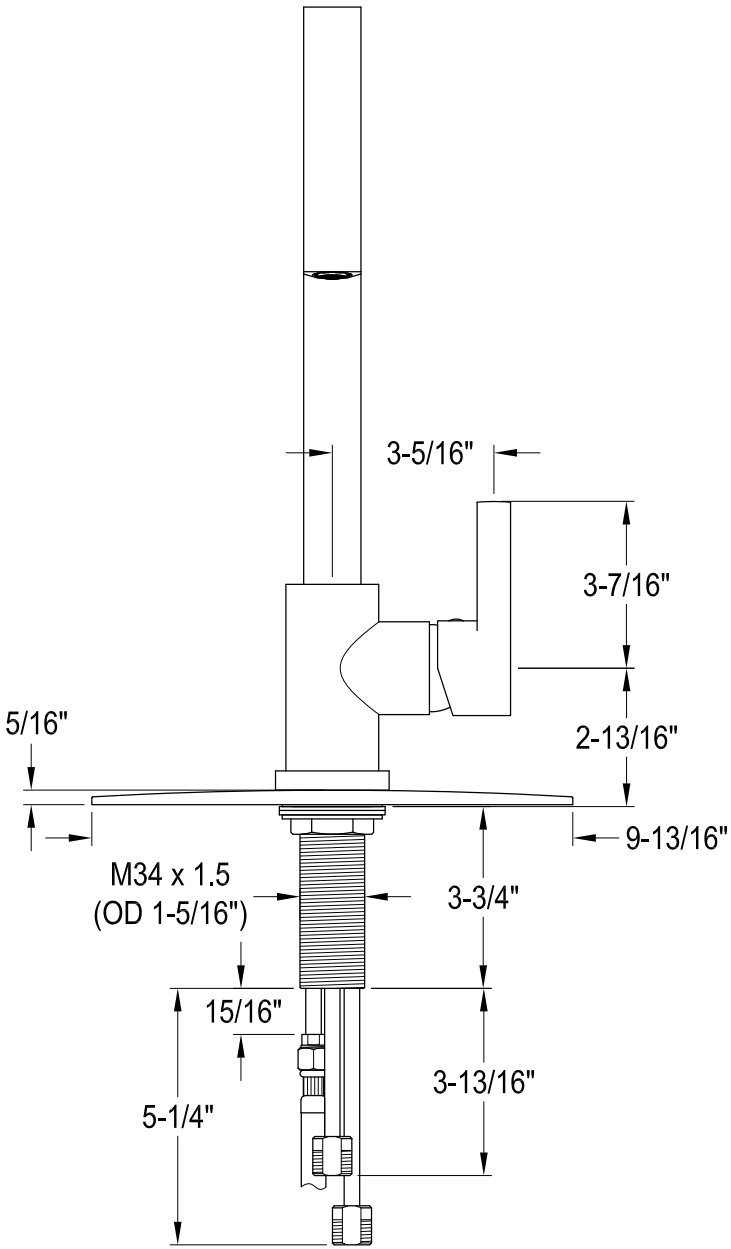

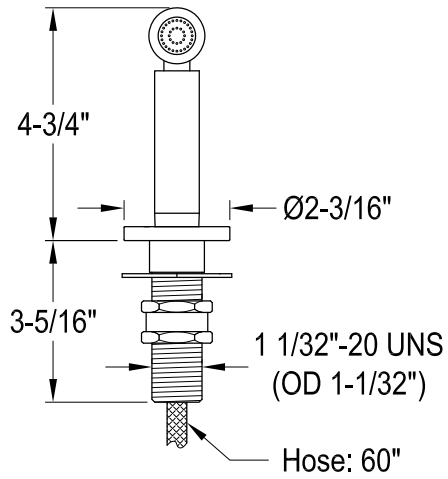

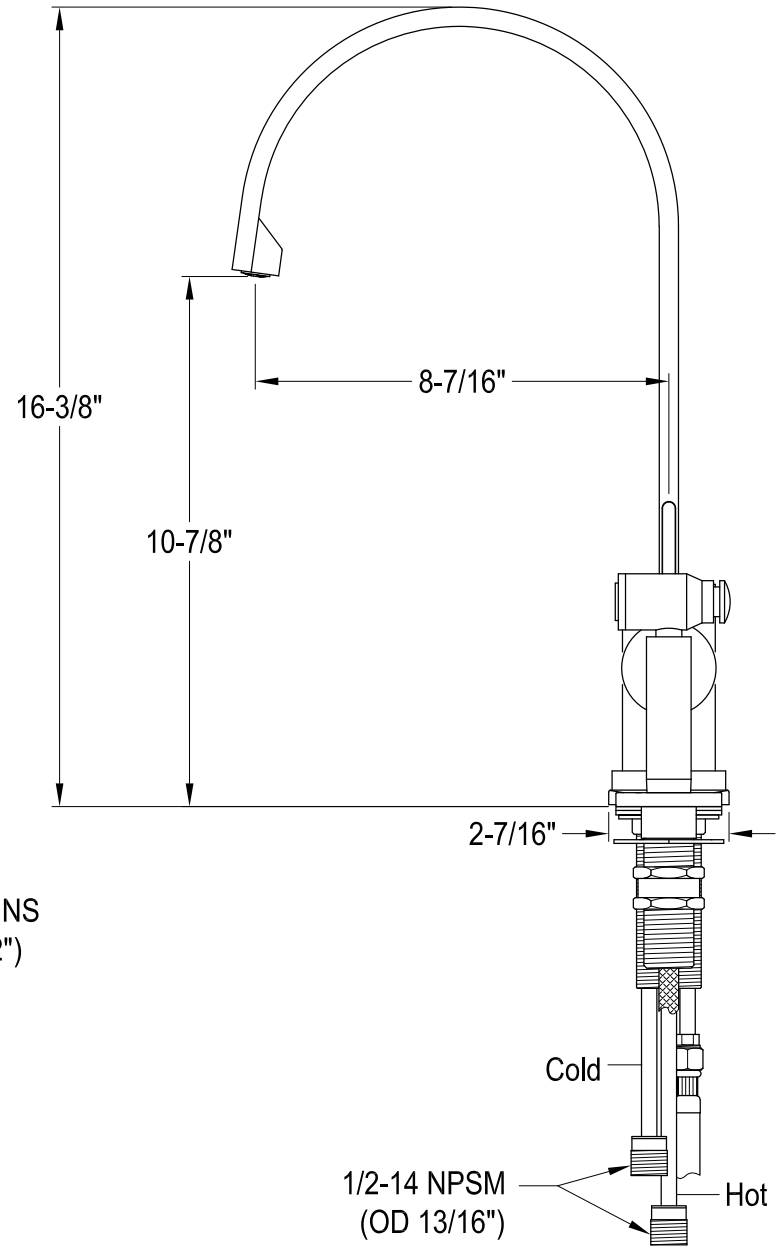

Ref# LS8710,1,3,8CTLBS,CTLBSAB | 2024-07-B