SHIMANO

STRADIC

STRADICC3000XGL

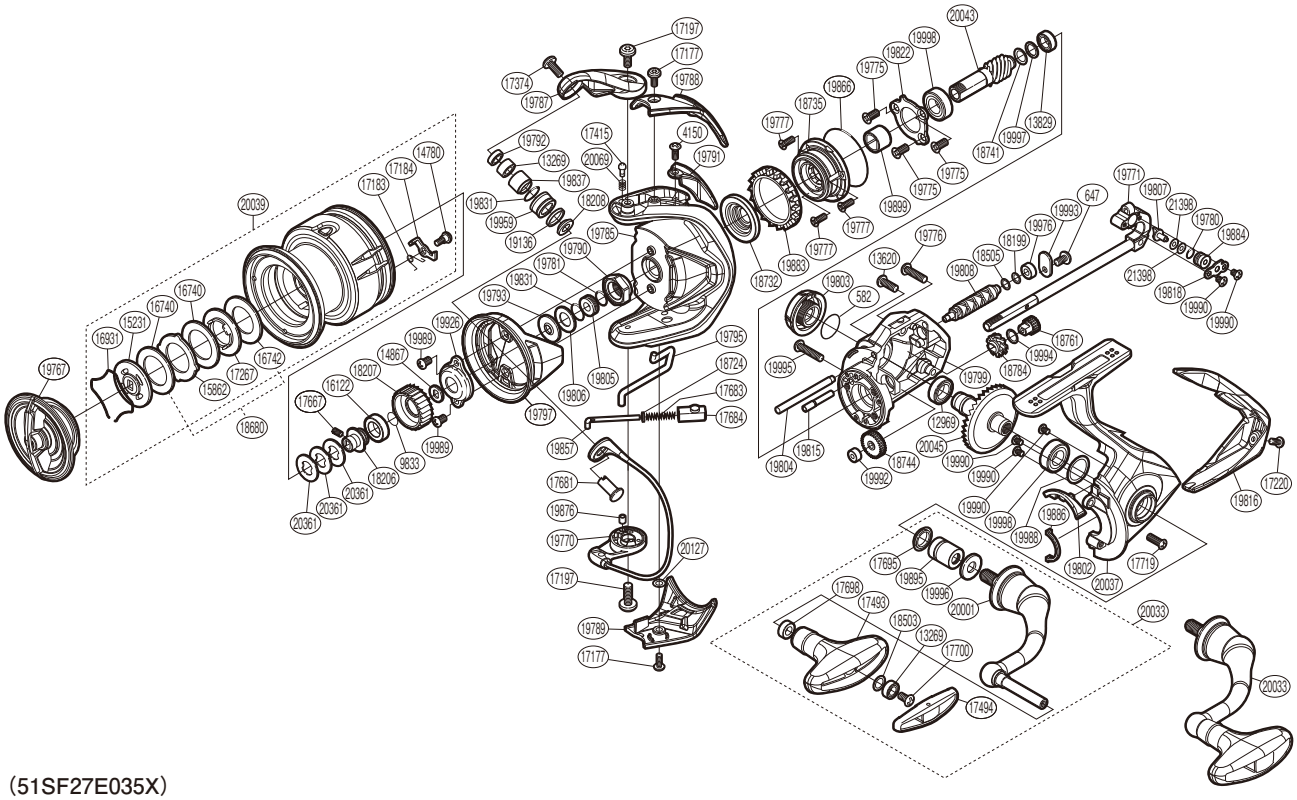

(51SF27E035X)

#	Part No.	Description	#	Part No.	Description	#	Part No.	Description
582	108WH	O Ring	18503	101BD	Washer	19816	10RS0	Rear Protector
647	10QG5	Screw	18505	101BS	Washer	19818	10182	Oscillating Pawl Cover
4150	103KS	Screw	18680	10SAD	Drag Washer	19822	10DWD	Bearing Retainer
9833	107V2	Ratchet Spring	18724	101D9	Spring Guide A Support	19831	1009E	O Ring
12969	107FA	Ball Bearing	18732	101D5	Rotor Ring	19837	1009K	Line Roller Bushing
13269	104VX	Ball Bearing	18735	10S2L	Roller Clutch Assembly	19857	10SAN	Bail Spring Guide A
13620	10L6D	Screw	18741	10SYU	Washer	19866	1009Z	O Ring
13829	104JZ	Ball Bearing	18744	10DK0	Idle Gear	19876	1009B	Bail Spring Guide A Bush
14780	10A6F	Screw	18761	10DK2	Idle Gear B Small	19883	10QXQ	Friction Ring
14867	103PE	Spool Support	18784	10DKY	Idle Gear B Large	19884	1009L	Oscillating Slider Bushing
15231	10QBU	Key Washer	19136	10RFZ	Line Roller Spacer	19886	1009W	Flange Water Proof
15862	102XW	Eared Washer	19767	10180	Drag Knob Assembly	19895	100A0	Handle Shaft Cover B
16122	10J3F	Spool Bushing	19770	10DZC	Bail Assembly	19899	1009Y	Roller Clutch Inner
16740	10345	Drag Washer	19771	10DYR	Main Shaft Assembly	19926	1076N	Rotor Nut Lock Plate
16742	10C1A	Drag Washer	19775	100WY	Screw	19959	1009A	Line Roller
16931	10B8N	Drag Washer Retainer	19776	100WP	Screw	19976	1009C	Worm Bushing (Rear)
17177	10PS2	Screw	19777	100WT	Screw	19988	10DZ3	Washer
17183	10BQF	Drag Click Spring	19780	100WX	O Ring	19989	103GW	Screw
17184	102H5	Drag Click	19781	10DXE	O Ring	19990	1055H	Screw
17197	10PS5	Screw	19785	10RRR	Rotor	19992	1009G	Worm Bushing (Front)
17220	10PRZ	Screw	19787	10RSF	Bail Arm	19993	10S7C	Worm Shaft Retainer
17267	10BCG	Key Washer	19788	10RS1	Bail Spring Cover	19994	10TBA	Washer
17374	10K90	Screw	19789	10RSA	Bail Hold Support Guard	19995	10L6N	Screw
17415	106ZC	Click Pin	19790	1018F	Rotor Nut	19996	10H9N	Washer
17493	10R38	Handle Knob Assembly	19791	10RRW	Counter Weight	19997	10HE5	Washer
17494	10R3A	Handle Knob Seal	19792	10187	Line Roller Collar	19998	10DZB	Ball Bearing
17667	10PN3	Set Screw	19793	1017W	Bearing Water Proof	20001	10DZJ	Handle Shank Assembly
17681	10TPC	Line Roller Support	19795	1018H	Bail Trip Lever	20033	10E1L	Handle Assembly
17683	105R6	Bail Spring	19797	10RSC	Rotor Brim	20037	10DZH	Side Cover Assembly
17684	107AB	Bail Spring Guide B	19799	10RSG	Body	20039	10E1H	Spool Assembly
17695	10PXV	Handle Shaft Seal	19802	1017Y	Bail Trip Strike	20043	10DX0	Pinion Gear
17698	10PXZ	Handle Knob Bushing	19803	10RSK	Handle Screw Cap	20045	10E9W	Drive Gear
17700	10LFA	Screw	19804	10DVX	Oscillating Guide A	20069	10HE7	Click Spring
17719	10M2G	Screw	19805	10RDL	Main Shaft Collar	20127	10RTV	Washer
18199	10ECK	Washer	19806	10DXD	Washer	20361	101TA	Spool Washer
18206	10THY	Bearing Bushing	19807	1018D	Oscillating Pawl	21398	10RKQ	Washer
18207	10SYS	Drag Click Ratchet	19808	10DVY	Worm Shaft			
18208	10TJM	Spacer	19815	10DVW	Idle Gear B Shaft			

Please note that the number of adjusting washers may not be the same as shown in the exploded views.
(Adjustment will vary with each individual product.)