ROHL

houseofrohl.com

MYRINA™ PULL-DOWN KITCHEN FAUCET WITH U-SPOUT

MY56D1

FEATURES

- 1.8 GPM
- Requires 2 1/2” clearance from backsplash to center of faucet hole
- 1 3/8” hole size
- 1 1/2” max deck depth
- 8 11/16” center to center reach- 10 1/4” total length
- 16 11/16” spout total height
- 9 7/8” Deck to the bottom of the hand spray
- 59” Nylon hand spray hose
- Dual-spray functionality with ability to toggle between stream and spray settings
- 24” supply hoses with 9/16” female connection

COLORS/FINISHES

- Polished Chrome
- Polished Nickel
- Satin Nickel
- Matte Black*
- Satin Gold*

WARRANTY

- Limited Lifetime

(*) 5-Year Limited Warranty

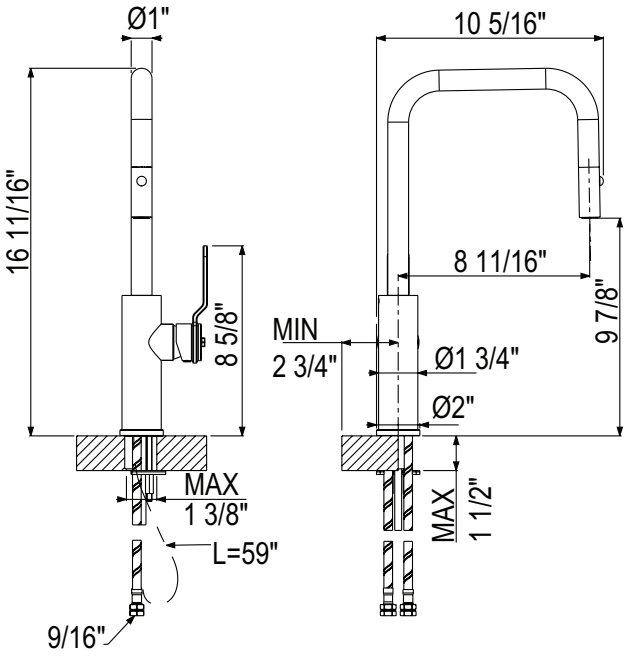

Consult your local House of Rohl showroom for additional information and specifications. For complete warranty details and a list of showrooms, go to houseofrohl.com

09/20/2023 SPEC1994 500000367707
Rev.Date:04/14