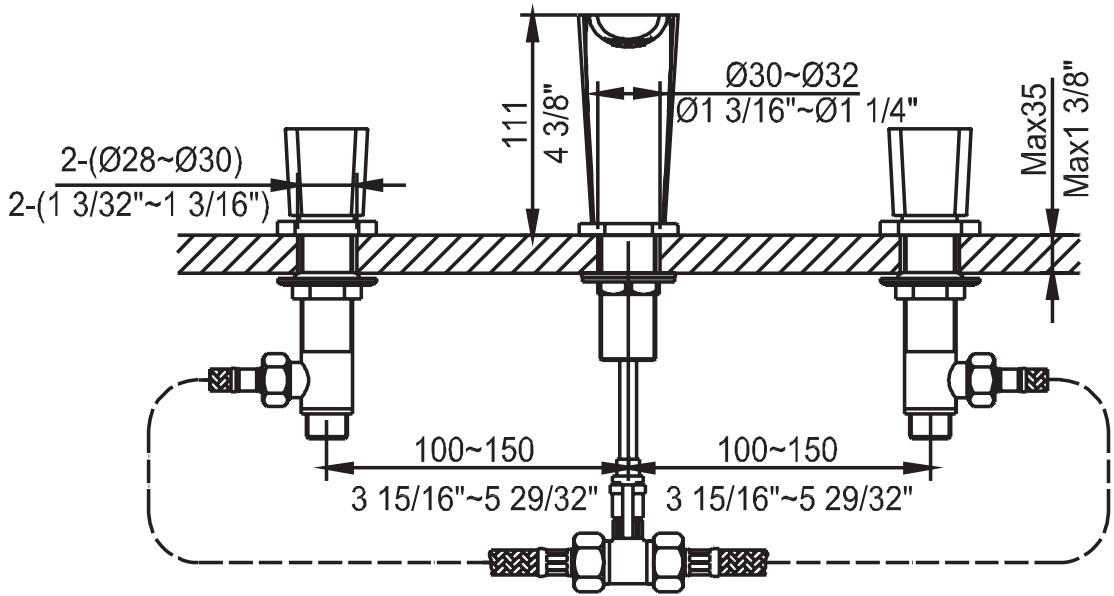
2-(Ø28~Ø30)
2-(1 3/32"~1 3/16")
111
4 3/8"
Ø30~Ø32
Ø1 3/16"~Ø1 1/4"
Max35
Max1 3/8"
100~150
3 15/16"~5 29/32"
100~150
3 15/16"~5 29/32"

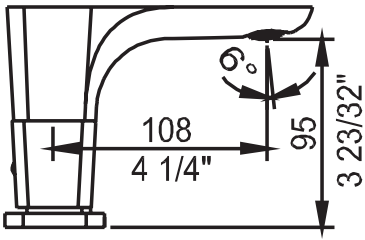
6°
108
4 1/4"
95
3 23/32"