EPA Standard of Performance for New Residential Wood Heaters

Certification Test Report

Confidential Business Information (CBI)

Manufacturer: Wolf Steel Ltd.
Heater Type: Wood-Fired, Freestanding Room Heater
Model: Timberwolf 2100, Napoleon S15

Prepared for: Wolf Steel Ltd.
24 Napoleon Road
Barrie, ON L4M 0G8
Canada

Prepared by: OMNI-Test Laboratories, Inc.
13327 NE Airport Way
Portland, OR 97230
(503) 643-3788

Test Period: January 28 - 29, 2019

Report Date: June 17, 2019

Report Number: 0415WS014E

All data and information contained in this report are confidential and proprietary to Wolf Steel Ltd. Its significance is subject to the adequacy and representative character of the samples and to the comprehensiveness of the tests, examinations, or surveys made. The contents of this report cannot be copied or quoted, except in full, without specific, written authorization from Wolf Steel Ltd. and OMNI-Test Laboratories, Inc. No use of the OMNI-Test Laboratories, Inc. name, logo, or registered mark (O-TL) is permitted, except as expressly authorized by OMNI-Test Laboratories, Inc. in writing.

AUTHORIZED SIGNATORIES

This report has been reviewed and approved by the following authorized signatories:

Evaluator:



Bruce Davis
Technician

Reviewer:

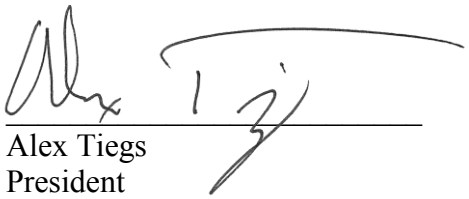

Alex Tiegs
President

TABLE OF CONTENTS

PREFACE .....(3 pages)

1. SAMPLING PROCEDURES AND TEST RESULTS 4
Introduction.....5
Individual Run summaries 6

Summary Tables
Table 1 - Particulate Emissions Results.....7
Table 2 - Particulate Emissions Results (First Hour).....7
Table 3 – B415.1 Efficiency and CO Emissions 7
Table 4 - Test Facility Conditions 8
Table 5 – Kindling and Start-up Fuel Description Summary 8
Table 6 - Fuel Measurements and Cordwood Descriptions - Test.....8
Table 7 - Dilution Tunnel Gas Measurements and Sampling Data 9
Table 10 - Test Configurations 9

2. QUALITY ASSURANCE / QUALITY CONTROL……10

Appendix A: Polytests Services Report PI-20184

Section 1

Sampling Procedures and Test Results

INTRODUCTION

Wolf Steel Ltd. retained *OMNI* to act as a third-party certifier for U.S. Environmental Protection Agency (EPA) certification on the Timberwolf 2100 and Napoleon S15 freestanding room heaters. The Timberwolf 2100 is a freestanding wood burning room heater, the firebox is constructed of mild steel and is refractory lined. Usable firebox volume was measured to be 1.45 cubic feet and the stove is vented through 6" flue collar located on the stove top.

Testing was performed at Polytests Services. The altitude of the laboratory is 100 feet above sea level. Polytest submitted a report and all relevant data to OMNI for review. This report serves as acceptance of the test report in meeting all the technical testing and reporting requirements. A copy of the Polytest report can be found in Appendix A. The unit was received in good condition and logged in during July 2018, Polytest services conducted all testing and was completed by January 29, 2019.

This report is organized in accordance with the EPA-recommended outline and is summarized in the Table of Contents immediately preceding this section. The results in this report are limited to the item submitted.

SAMPLING PROCEDURE

The Timberwolf 2100 was tested in accordance with the U.S. EPA 40 CFR Part 60, Subpart AAA – Standards of Performance for New Residential Wood Heaters using EPA ASTM E2515 and E3053 *per* EPA Alt-125's requirements for cordwood testing in accordance with the CFR. No 28R. Particulate emissions were measured using sampling trains consisting of two Teflon coated 47mm filters (front and back). See Appendix A for details on EPA Alt-125.

The model Timberwolf 2100 was tested for thermal efficiency and carbon monoxide (CO) emissions in accordance with CSA B415.1-10.

SUMMARY OF RESULTS

The weighted average emissions of the three test runs included in the results indicate a particulate emission rate of 1.57 grams per hour. Particulate emissions were sampled on one of the high burn fuel loads. The Timberwolf 2100 results are within the emission limit of 2.5 g/hr for affected facilities tested with cordwood, manufactured on or after May 15, 2020.

The proportionality results for all 3 test runs were acceptable when calculated at a 10-minute sample rate. Quality check results for each test run are presented in Section 2 of this report.

INDIVIDUAL RUN SUMMARIES

Run 1 - Test procedures followed to produce a high burn rate with a primary air setting of fully open. Observed burn rate was calculated at 3.91 kg/hr. Emissions results were calculated using particulate sampling from kindling, start-up fuel, and test fuel load combined (cold to hot). Burn rate, and efficiency were calculated using data from the test fuel load only (hot to hot). No sampling anomalies occurred, this test run was determined to be valid for inclusion in the weighted average.

Run 2 - Test procedures were followed to produce a low burn rate with a primary air setting of full closed. Observed burn rate was calculated at 1.05 kg/hr. Emissions and efficiency results were calculated using a hot to hot burn cycle, a coal bed generated by the high burn procedure was used. No sampling anomalies occurred, this test run was determined to be valid for inclusion in the weighted average.

Run 3 - Test procedures followed to produce a high burn rate with a primary air setting of fully open. Emissions sampling did not occur during this procedure, it was conducted to create a coal bed for run 4.

Run 4 - Test procedures were followed to produce a low burn rate with a primary air setting of 0.0157" from full closed. Observed burn rate was calculated at 1.13 kg/hr. Emissions and efficiency results were calculated using a hot to hot burn cycle, a coal bed generated by the high burn procedure was used. No sampling anomalies occurred, this test run was determined to be valid for inclusion in the weighted average.

Table 1 – Particulate Emissions

Run	**Burn Rate** Calculated from a Hot to Hot burn cycle (kg/hr dry)	**ASTM E2515 Emissions** (g/hr)	**ASTM E3053 Weighting Factor** (%)	**ASTM E3053 Weighted Emissions** (g/hr)
1	3.91	[1] 4.50	20	0.900
2	1.05	0.38	40	0.152
4	1.13	1.29	40	0.516
The sum of weighted particulate emission of 3 test runs: 0.900 + 0.152 + 0.516 = **1.57 g/hr.**				

1. Based on a cold start including kindling and start-up fuel.

Table 2 – Particulate Emissions (First Hour)

Run	**ASTM E2515 Emissions – First Hour** (g/hr)
1	6.49
2	1.70
4	3.96

Table 3 – B415.1 Efficiency and CO Emissions

Run	**Heat Output (BTU/hr)**	**HHV Efficiency (%)**	**LHV Efficiency (%)**	**ASTM E3053 Weighted HHV Efficiency**	**CO Emissions (g/h)**	**CO Emissions (g/min)**
1	30,042	68.87	74.10	13.77	21.5	0.358
2	14,582	72.60	78.12	29.04	63.0	1.05
4	15,299	70.70	76.07	28.28	66.7	1.11
Weighted average HHV efficiency of 3 tests: 13.77 + 29.04 + 28.28 = **71.1 %.**						
Average CO emissions: (0.358 + 1.05 + 1.11)/3 = **0.84 g/min**						

Table 4 – Test Facility Conditions

Run	Room Temperature (°F)		Barometric Pressure (Hg)		Air Velocity (ft/min)	
	Before	**After**	**Before**	**After**	**Before**	**After**
1-2	77	79	30.39	30.12	<50	<50
3-4	76	80	30.0	29.88	<50	<50

Table 5 – Kindling and Start-up Fuel Description Summary

Run	Kindling Weight Wet Basis (lbs)	Start-up Fuel Weight Wet Basis (lbs)	Residual Start-up fuel weight (lbs)
1	1.9	4.4	2.1
3	1.9	4.2	2.2

Table 6 – Fuel Measurement and Cordwood Description Summary – TEST

Run	Test Fuel Wet Basis (lbs)	Firebox Volume (ft^3)	Fuel Loading Density Wet Basis (lbs/ft^3)	Test Fuel Dry Basis (lbs)	[1.]Test Fuel Consumed During Test Dry Basis (lbs)	Piece Length (in)
1	14.8	1.45	10.2	12.02	13.9[1]	19
2	17.31	1.45	11.9	14.05	14.0	16
3	14.15	1.45	9.8	11.5	13.1[1]	19
4	16.86	1.45	11.6	13.68	13.7	16

1. Includes start-up and kindling fuel for high burn tests 1, 3

Table 7 – Dilution Tunnel Gas Measurements and Sampling Data Summary

Run	Length of Test (min)	Average Dilution Tunnel Gas Measurements		
		Velocity (ft/sec)	Flow Rate (dscf/min)	Temperature (°F)
1	90	15.9883	161.3	98.5
2	363	N/A	176.6	N/A
4	331	N/A	171.1	N/A

Table 10 – Test Configurations

Run	Startup Procedures	Combustion Air
1	Fuel Loading: Kindling and start-up fuel loaded together, a torch was used for 60 seconds to establish a fire. At 16 minutes placed fuel load into the firebox and closed the loading door immediately after loading. Loading required less than 1 minute to complete. Door: For kindling and start-up fuel, loading door was open for 1 minute, then closed. Test fuel load; fuel loading door was closed immediately after loading. Primary Air: Air control fully open for the entire test. Secondary: No user control for secondary air. Fan: Fan was set to an automatic setting that turns on to a desired setting after the firebox reaches a specified temperature. Bypass: N/A	Fully open for entire test.
2	Fuel Loading: Test fuel loaded onto coal bed generated by test number 1. Door: Closed immediately after loading. Primary Air: Fully open, then set to full closed by 15.0 minutes. Secondary: No user control for secondary air. Fan: Fan operates automatically, was set to high the entire test. Bypass: N/A	Fully open for first 15.0 minutes, then set to full closed.
4	Fuel Loading: Test fuel loaded onto coal bed generated by test number 3. Door: Closed immediately after loading. Primary Air: Fully open, then set to 0.156” from full closed by 15.0 minutes. Secondary: No user control for secondary air. Fan: Fan operates automatically, was set to high the entire test. Bypass: N/A	Fully open for first 15.0 minutes, then set to 0.156” from full closed.

Section 2
Laboratory Quality Assurance

QUALITY ASSURANCE/QUALITY CONTROL

OMNI follows the guidelines of ISO/IEC 17025, "General Requirements for the Competence of Testing and Calibration Laboratories," and the quality assurance/quality control (QA/QC) procedures found in *OMNI*'s Quality Assurance Manual.

OMNI's scope of accreditation includes, but is not limited to, the following:

- ANSI (American National Standards Institute) for certification of product to safety standards.
- To perform product safety testing by the International Accreditation Service, Inc. (formerly ICBO ES) under accreditation as a testing laboratory designated TL-130.
- To perform product safety testing as a "Certification Organization" by the Standards Council of Canada (SCC).
- Serving as a testing laboratory for the certification of wood heaters by the U.S. Environmental Protection Agency.

This report is issued within the scope of *OMNI*'s accreditation. Accreditation certificates are available upon request.

The manufacturing facilities and quality control system for the production of the Timberwolf 2100 at Wolf Steel Ltd. were evaluated to determine if sufficient to maintain conformance with OMNI's requirements for product certification. OMNI has concluded that the manufacturing facilities, processes, and quality control system are adequate to produce the appliance congruous with the standards and model codes to which it was evaluated.

This report shall not be reproduced, except in full, without the written approval of OMNI-Test Laboratories, Inc.

Appendix A
PolyTest Certification Report

POLYTESTS
TESTING THROUGH YOUR REALITY

TEST REPORT

TEST OF A NON-CATALYTIC WOOD HEATER FOR EMISSIONS AND EFFICIENCY

PER EPA METHODS ALT-125, ASTM E2515, ASTM E3053 and CSA B415.1,

Client:

Wolf Steel ltd.

24 Napoleon Road, Barrie,
Ont. L4M 0G8
Model Name: Timberwolf 2100

Attention: Rafael Sanchez

TESTED BY:
Services Polytests inc.
695-B Gaudette
St-jean-sur-Richelieu, QC, J3B 7S7

TEST DATES: January 28th and 29th 2019
REPORT DATE: February 8th 2019
Project number: PI-20184

All services undertaken are subject to the following general policy: Reports are submitted for exclusive use of the clients to whom they are addressed. Their significance is subject to the adequacy and representative character of the samples and to the comprehensiveness of the tests, examinations or surveys made. This document may not be reproduced except in its entirety without the written permission from Services Polytests Services Polytests have not been involved in any R&D design consulting regarding this unit as requested by the NSPS..

Tested:
Maxime Martin



written by:
Danick Power, P. Eng



Verified by third party certifier (Omni):

SUMMARY

1 Introduction 3
1.1 General 3
1.2 Test unit information 3
1.3 Results 3
1.4 Pretest information 4
2 Summary of test results 4
2.1 Model identification 4
2.2 Laboratory information 4
2.3 Test condition Summary 4
2.4 Test run results summary 6
2.5 Weighted average summary 7
2.6 Weighted average Final results 7
2.7 Test facility conditions 7
2.8 Dilution tunnel flow rate measurements and sampling data (ASTM E2515) 8
2.9 Dilution tunnel dual train precision 8
3 Process description 9
3.1 Discussion 9
3.2 Unit dimensions 9
3.3 Air supply system 10
3.4 operation during test 11
3.5 Start-up operation 11
3.6 Sampling locations 11
3.7 Drawings 11
3.8 Emissions efficiency testing equipment list 11
4 Sampling methods 12
4.1 Particulate sampling 12
5 Quality assurance 12
5.1 Instrument calibration 12
5.1.1 Gas meters 12
5.1.2 SCALES 12
5.1.3 Gas analyzers 12
5.2 Test method procedures 12
5.2.1 Leak check procedures 12

5.2.2 Tunnel velocity flow measurement 12

5.2.3 Pm sampling proportionality (ASTM E2515) 12

List of appendix

APPENDIX 1: Raw data, forms and results

APPENDIX 2: Proportionality results

APPENDIX 3: Calibration data

APPENDIX 4: Unit pre-burn

APPENDIX 5: Participants

APPENDIX 6: Drawings and specifications

APPENDIX 7: Manual & Label

APPENDIX 8: Photographs of test set up

APPENDIX 9: Test load photographs

APPENDIX 10: Laboratory Operating Procedures

APPENDIX 11: Sample calculations

APPENDIX 12: Volume calculations

APPENDIX 13: Operating instruction

APPENDIX 14: Drawing Air flow pattern

APPENDIX 15: Application for wood stove program

1 INTRODUCTION

1.1 GENERAL

Laboratory

- Location: Services Polytests Inc., 695-B Gaudette St-jean-sur-Richelieu QC, Canada J3B 7S7
- Elevation: 100 feet above sea level

Test program

- Purpose: unit qualification NSPS 2020 cord wood
- Test dates: January 28th and 29th 2019
- Test methods used:
    - Particulate emissions: ASTM E3053-17 ; ASTM E2515-11 methods ALT-125 as referred into 40 CFR Part 60 Subpart AAA
    - Efficiency: CSA B415.1-10

1.2 TEST UNIT INFORMATION

General

- Manufacturer: Wolf Steel ltd
- Product type: wood heater
- Combustion system: non-catalytic
- Unit tested: Timberwolf 2100

Particularities

- Timberwolf 2100 – Stove with pedestal
- S15- Stove with legs

In Summary:

All 2 models are built from the same firebox configuration. All primary and secondary airflows are exactly the same at that point where they enter the unit. The viewing area and latching mechanism is the same for all door configurations. Optional stove pedestal/leg accessories are provided as are optional blowers.

1.3 RESULTS

Emission results obtained

- Weighted Average Emissions Rate: 1.57 g/hr
- Weighted Average Overall Efficiency: 71 %

Conformity: NSPS Phase 2020 cord wood.

1.4 PRETEST INFORMATION

Unit condition: The unit was received by carrier in July 2018 in good condition. The 50hrs of aging was made by Polytests Services.

Set up

- Venting system type: diameter 6-inch steel pipe and insulated chimney
- System height from floor: 15 feet
- Particularities: Optional convection fan can be provided with the heater

2 SUMMARY OF TEST RESULTS

2.1 MODEL IDENTIFICATION

Model name number	Timberwolf 2100
Manufacturer	Wolf Steel ltd
address	24 Napoleon Road, Barrie, Ont. L4M 0G8
appliance category	wood stove
Usable Firebox Volume - ft3	1,45
Catalytic/Non-Cat	Non-Cat
convection air fan (no, standard, Optional)	optional

2.2 LABORATORY INFORMATION

Testing laboratory	Polytests Services
address	695-B Gaudette, St-jean-sur-richelieu
ISO/ Accreditation info	17025
Dates tested	January 28th and 29th 2019
Test Methods / Standard	ALT-125
Dilution Tunnel Inside diameter - in	6
Filter diameter	47
Filter material	PTFE Pall

2.3 TEST CONDITION SUMMARY

Model Name(s) / number(s)	2100		
Usable firebox Volume-ft3	1,45		
Convection Air Fan (No, Standard, Optional)	OPTION		
Test runs #	1,1	1,1	2,1
Date tested	28-01-2019	28-01-2019	29-01-2019
test run category (L,M,H)	H	L	M
average barometric pressure – in Hg	30,25	30,25	29,94

Max observe Ambient temp. °F	79,28	78,89	80,59
Min observe Ambient Temp °F	71,36	73,64	76,16
Max observe Filter temp °F	89,73	87,87	89,74
Run air settings			
Primary (measured up from minimum)	full open	Minimum setting	medium setting
Secondary (measured up from minimum)	fix	fix	fix
Convection air setting	on	on	on
Test fuel load			
Cordwood fuel species	Oak	Oak	Oak
specific Gravity (from Table 1)	0,66	0,66	0,66
Higher heating value - Btu/lb (from Annex A1)	8690	8690	8690
Nom. Test fuel piece length - in	19	16	16
Number of test fuel pieces	4	5	5
Test fuel Weight			
Kindling - as fired lb.	1,90	NA	NA
Kindling Wt. - as % of test fuel load	12,8%	NA	NA
Kindling Moisture % Db	9,0	NA	NA
Kindling Kg DB	0,79	NA	NA
SU Fuel Wt- as fired lb	4,40	NA	NA
SU Fuel wt. - as % of test fuel load	29,7%	NA	NA
SU Fuel moisture - % DB	20,0	NA	NA
SU fuel- Kg DB	1,66	NA	NA
Test Fuel Load - As Fired lb	14,80	17,31	16,86
Ave. Test Fuel Load MC % DB	23,13	23,22	23,19
Test Fuel Load - kg DB	5,45	6,37	6,21
Test fuel Loading density lb./ft3	10,21	11,94	11,63
Residual SU fuel wt. - as fired lb.	2,1	NA	NA
Residual SU fuel wt.- as % of test fuel load	14,2%	NA	NA
Test run duration - minutes	90	363	331
Test run duration - h	1,50	6,05	5,52
Test fuel load wt at the end of the test - as fired lb	1,4	0	0
total fuel burned kg Db	6,32	6,37	6,21
% test fuel load wt at end of the test	9,5%	0,0%	0,0%

2.4 TEST RUN RESULTS SUMMARY

Model name / number	2100		
Usable Firebox volume	1,45		
Convection air Fan (no, Standard, option)	OPTION		
Test runs nu.	1,1	1,2	2,2
Date tested	28-01-2019	28-01-2019	29-01-2019
Test run category	H	L	M
Burn rate - Kg/hr DB	3,91	1,05	1,13
Burn rate as % of low to high Midpoint	NA	27,0%	28.9%
Burn duration - h	1,50	6,05	6
Heat output btu/hr	30 042	14 582	15 299
Average Dilution Tunnel Flow Rate - dscfm	161,3	176,6	171,1
Average Sample Flow Rates - dscfm			
Train 1	0,1888	0,1874	0,1901
train 2	0,1813	0,1777	0,1792
Total PM Emissions - g			
Train 1 g	6,44	2,45	7,31
train 2 g	7,06	2,19	6,89
Average	6,75	2,32	7,10
PM emission train precision %	4,63%	5,68%	2,91%
PM emission g/kg	1,07	0,36	1,14
PM emission rate g/h	4,50	0,38	1,29
Total Co Emission g	26,2	381,3	367,1
Co emission Rate g/h	21,5	63,0	66,7
Co emission Rate g/min	0.36	1.05	1.11
1st hour emission rate g/h	6,5	1,7	4,0
Overall Efficiency - CSA B415,1			
% HHV Basis	68,87%	72,60%	70,70%
% LHV Basis	74,10%	78,12%	76,07%

2.5 WEIGHTED AVERAGE SUMMARY

Model name / number	2100		
Usable Firebox volume	1,45		
Convection air Fan (no, Standard, option)	OPTION		
average for each test run category	L	M	H
burn rate kg/h DB	1,05	1,13	3,91
PM Emission rate - g/h	0,38	1,29	4,50
Co emission rate - g/h	63,03	66,75	21,53
Overall Efficiency - CSA B 415,1			
% HHV Basis	72,6%	70,7%	68,9%
% LHV Basis	78,1%	76,1%	74,1%
Heat output - Btu/hr	14582	15299	30042
Category weighting	0,4	0,4	0,2

2.6 WEIGHTED AVERAGE FINAL RESULTS

ASTM E 3053 Weighted averages			
PM Emission Rate - g/h	1,57		
CO Emission Rate g/h	56,2		
Overall Efficiency - CSA B415,1			
% HHV Basis	71,09%		
% LHV Basis	76,50%		
Heat output range - Btu/h	14 582	to	30042
Co Arithmetic average g/min	0,84		

2.7 TEST FACILITY CONDITIONS

Run Number	*Room Temperature*		*Barometric pressure*		*Relative humidity*		*Air Velocity*	
	Before	*After*	*Before*	*After*	*Before*	*After*	*Before*	*After*
	(F)	*(F)*	*(in.Hg)*	*(in.Hg)*	*(%)*	*(%)*	*(ft/min)*	*(ft/min)*
1	77	79	30,39	30,12	11,2	13,3	0	0
2	76	80	30,00	29,88	16,2	15,1	0	0

2.8 DILUTION TUNNEL FLOW RATE MEASUREMENTS AND SAMPLING DATA (ASTM E2515)

Average dilution tunnel measurements				*Sample Data*			
Run Number/ test category	*Burn Rate (Min)*	*Volumetric Flow Rate (dscf/min)*	*Total Temperatures (°R)*	*Volume sampled (DSCF)*		*Particulate catch (mg)*	
				1	*2*	*1*	*2*
high Fire test	90	161,25	626,83	16,991	16,321	7,70	8,10
Low fire test	363	176,58	558,48	68,041	64,514	2,60	2,20
medium fire test	331	171,10	563,32	62,909	59,323	8,20	7,30

2.9 DILUTION TUNNEL DUAL TRAIN PRECISION

Run Number / test category	*Sample Ratio*		*Total Emission (g)*		
	Train 1	*Train 2*	*Train 1*	*Train 2*	*% Deviation*
high Fire test	854,14	889,20	6,44	7,06	4,63%
Low fire test	942,06	993,57	2,45	2,19	5,68%
medium fire test	900,26	954,67	7,31	6,89	2,91%

3 PROCESS DESCRIPTION

3.1 DISCUSSION

The heater was received in a good shape by a carrier in July 2018. Pre-burn was done as preliminary testing with cord wood at Polytests facility. The side walls of the combustion chamber are lined with Firebricks. The secondary air inlet is fixed and the primary air damper is located at the underneath the firebox. Post combustion is ensured by the secondary 4 tubes located at the top of the firebox. Above the tubes a is a deflector made of Ceramic fiber.

3.2 UNIT DIMENSIONS

Baffle

- Location: between top of combustion chamber and hearth
- Restriction: 2 ¾ X 23 inches at the front of unit
- Dimensions: covers the hearth area minus the restriction at front
- Material: 1-inch thick Ceramic Fiber

Bricks

- Firebrick 1 ¼ thick lining bottom, back and side of the firebox.

Flue gas exhaust

- Location: top
- Dimensions: 6 in. diameter
- Material: Steel

Gasket

- Door gasket - Outer: 0.5” DIA black woven fiberglass rope
- Door gasket – Inner: 0.25” black woven fiberglass rope
- Glass gasket: 0.75” x 0.062” black woven fiberglass

Overall unit dimension

- Firebox dimensions: W=20.86”, D=11.70”, H Max=11.79”
- Usable volume: 1.45 cuft
- Overall dimension: 26-inch-wide x 20-inch-deep x 30-inch-high

Convection fan

- The 110 CFM blower drawing containing its specifications is included in SUBASSEMBLIES drawings.

Catalyst

- none

3.3 AIR SUPPLY SYSTEM

Description

- Primary air: Bottom front of the heater
- Secondary air: sides of the heater Refer appendix 6 for drawing details

Characterization

The following table shows the inlet and outlet sections of each system. The air introduction system number is referred to on a set of drawings in Appendix 6.

AIR INTRODUCTION SYSTEM		INLET (1) sq. in.			OUTLET
Identification	Type	Imin	Imax	Controlled	(sq. in.)
A *	Primary	0.11	2.773	Yes	6.105
B *	Secondary	2.054	2.054	Fix	2.545
C *	Pilot	0.113	0.113	Fix	0.028

* This section would be filled by measuring and comparing with the manufacturer's drawings included in the test report.

Legend
Identification: Tag name referred to on drawings in Appendix 14, section airflow pattern
Type: Characterization of air intake
Imin: Minimum air intake of a particular air channel
Imax: Maximum air intake of a particular air channel
Controlled: Determines if a provision for air control is present
Outlet: Total air outlet of a particular air channel

3.4 OPERATION DURING TEST

Run #1.1
This run was performed on January 28th 2019. It lasted 90 minutes and a maximum burn rate was obtained at 3.9 kg/hr & emission at 4.5 gr/hr. The air inlet damper was fully open.

Run #1.2
This run was performed on January 28th 2019 as a continuation of the maximum burn rate (run1.1). It lasted 363 minutes and a Minimum burn rate was obtained at 1.05 kg/hr & emission at 0.38 gr/hr. The air inlet damper was at the minimum setting.

Run #21
This run was performed on January 29th 2019. It lasted 331 minutes and a medium burn rate was obtained at 1.13 kg/hr & emission at 1.29 gr/hr. The air inlet damper was at the medium setting.

- Details: Refer to the front page of each test run data sheets found in appendix for the detailed test sequence showing air supply settings and adjustments, fuel bed adjustments and operational specifics of the test unit.

Test fuel cribs

- Type of wood: Red Oak, 18 to 28% dry basis moisture content
- Description: for each test, description of the fuel crib is found on the front page of each test run data sheet together with photograph in appendix.

3.5 START-UP OPERATION

The complete manufacturer's firing procedure of each burn rate category is fully described in appendix 13.

3.6 SAMPLING LOCATIONS

Particulate samples are collected from the dilution tunnel at a point 15 feet from the tunnel entrance. The tunnel has two elbows in the system ahead of the sampling section. The sampling section is a continuous 20-foot section of 8-inch diameter pipe straight over its entire length. Tunnel velocity pressure is determined by a standard pitot tube located 48 inches from the beginning of the sampling section. Thermocouple is installed on the pitot tube to measure the dry bulb temperature. MC is assumed, as allowed, to be 4%. Tunnel samplers are located 56 inches downstream of the pitot tube and 24 inches upstream from the end of this section.

3.7 DRAWINGS

Various drawings of the stack gas sampling train and of dilution tunnel system are found in Appendix 6.

3.8 EMISSIONS EFFICIENCY TESTING EQUIPMENT LIST

The complete test equipment list together with all corresponding calibration data can be found in Appendix 3.

4 SAMPLING METHODS

4.1 PARTICULATE SAMPLING

Particulates were sampled in strict accordance with ASTM E2515. This method uses two identical sampling systems with Gelman A/E 61631 binder free (or equivalent), 47 mm diameter EMFAB TX40H 120-WW Pall filters. The dryers used in the sample systems are filled with "Drierite" before each test run.

5 QUALITY ASSURANCE

5.1 INSTRUMENT CALIBRATION

5.1.1 GAS METERS

At the conclusion of each test program the gas meters are verified using the reference dry gas meter. This process involves sampling the train operation for 1 cubic foot of volume. With readings made to .01 fr', the resolution is 1 %, giving an accuracy higher than the 2% required by the standard.

5.1.2 SCALES

Before each test program, the different scales used are checked with traceable calibration weights to ensure their accuracy.

5.1.3 GAS ANALYZERS

The continuous analyzers are zeroed and spanned before each test with NBS traceable gases. A mid-scale multi-component calibration gas is then analyzed (values are recorded). At the conclusion of a test, the instruments are checked again with zero, span and calibration gases (values are recorded only). The drift in each meter is then calculated and must not exceed 5% of the scale used for the test.

5.2 TEST METHOD PROCEDURES

5.2.1 LEAK CHECK PROCEDURES

Before and after each test, each sample train is tested for leaks. Leakage rates are measured and must not exceed 0.02 CFM or 4% of the sampling rate. Leak checks are performed checking the entire sampling train. Pre-test and post-test leak checks are conducted with a vacuum of 5 inches of mercury. Vacuum is monitored during each test and the highest vacuum reached is then used for the post-test vacuum value. If leakage limits are not met, the test run is rejected. During these tests, the vacuum is typically less than 2 inches of mercury. Thus, leakage rates reported are expected to be much higher than actual leakage during the tests.

5.2.2 TUNNEL VELOCITY FLOW MEASUREMENT

The tunnel velocity is calculated from a center point pitot tube signal multiplied by an adjustment factor. This factor is determined by a traverse of the tunnel as prescribed in EPA Method 1. Final tunnel velocities and flow rates are calculated from EPA Method 2, Equation 6.9 and 6.10. (Tunnel cross sectional area is the average from both lines of traverse.)

Pitot tubes are cleaned before each test and leak checks are conducted after each test.

5.2.3 PM SAMPLING PROPORTIONALITY (ASTM E2515)

Proportionalities were calculated in accordance with ASTM E2515. The data and results are found in appendix.

APPENDIX 1: Raw data, forms and results

POLYTESTS
TESTING THROUGH YOUR REALITY

Date: 2019-01-28 Manufacturer: WolfSteel Model: 2100
Project #: PT 20184 Run: 1 Tech: MM Reviewer: DP

- kindling 63LBS start fire No paper
- 1 min torche
- close Door immediatly
- Fan on (High) (on thermodisque)
- At 21LBS insert load
- close Door immediatly
At 34LBS stop pompe Fan
et mis Buche arrière en avant
At 21LBS insert load
- close Door immediatly
- ~~At 60 min~~ ~~Ope~~ ~~mm~~
At 13 min close air inlet ~~progress~~ gradually
At 15 min close air inlet completely ~~(...)~~ MM.
At 60 min open Fan (High)

TEST LOAD CONFIGURATION

POLYTESTS
TESTING THROUGH YOUR REALITY

PRE / POST CHECKS

Date: 2019-01-28 Manufacturer: Wolf Steel Model: 2100

Project #: PI 20184 Run: 1 Tech: MM Reviewer: [illegible]

	Equipment #	Time	12%	22%
Moisture Meter Calibration Check:	EM 191	7:00	ok	ok

	Pre-Test	Post-Test
Facility Conditions:		
Air Velocity from less than 2 feet	0 (max50 Fpm)	0 (max50 Fpm)
Smoke Capture Check	ok	ok
Picture	4 sides ok	ok

Wood Heater Conditions:

Date Wood Heater Stack Cleaned	2019-01-28
Date Dilution Tunnel Cleaned	2019-01-28
Induced Draft Check (max 0.005 H2O)	ok
Traverse before ignition	ok

Temperature System:

Ambient (65°-90°F)	ok °F

Proportional Checks:

Thermocouple check	ok
Pitot Clean	ok
Pitot verification	ok

Sampling Train ID Numbers:

	High fire test			Medium low fire test		
	1st hour	Train 1	Train 2	1st hour	Train 1	Train 2
Probe	009	16	30	32	36	43
Filter Front	811	815	817	804	806	808
Filter Back	812	816	818	805	807	809
Filter Thermocouple	11	11	12	11	11	12
Filter (80°F ≥ <90°F)	ok	ok	ok	ok	ok	ok

POLYTESTS
TESTING THROUGH YOUR REALITY

SAMPLING EQUIPMENT CHECK OUT

Date: 2019-01-28 Manufacturer: Wolf Steel Model: 2106

Project #: PJ 20184 Run: 1 Tech: M M Reviewer: DP

Leakage Checks Tunnel Samplers

High fire test	System 1st hour		System 1		System 2	
Unplugged Flow Rate = .25cfm	Pre-Test ASTM (-15) CSA B415 (-5)	Post-Test (max test)	Pre-Test ASTM (-15) CSA B415 (-5)	Post-Test (Max test)	Pre-Test ASTM (-15) CSA B415 (-5)	Post-Test (Max test)
Vacuum (inches Hg.)	-15	-15	-15	-15	-15	-15
Final 1minute DGM (Liter)	854952.30	854951.26	854952.53	854951.31	804919.63	805411.82
Initial 1minute DGM (Liter)	854952.30	854951.26	854952.53	854951.31	804919.60	805411.81
Change © (Liter)	∅	∅	∅	∅	0.03	0.02
Allowable leakage .04 x Sample rate or 0.28Lpm CSA B415 (0.56)						
Check OK	ok	ok	ok	ok	ok	ok

Low medium fire test	System 1st hour		System 1		System 2	
Unplugged Flow Rate = .25cfm	Pre-Test ASTM (-15) CSA B415 (-5)	Post-Test (max test)	Pre-Test ASTM (-15) CSA B415 (-5)	Post-Test (Max test)	Pre-Test ASTM (-15) CSA B415 (-5)	Post-Test (Max test)
Vacuum (inches Hg.)	-15	-15	-15	-15	-15	-15
Final 1minute DGM (Liter)	854953.58	856946.32	854953.88	856946.39	805413.31	807352.00
Initial 1minute DGM (Liter)	854953.58	856946.38	854953.86	856946.38	805413.31	807352.00
Change © (Liter)	∅	0.02	0.02	0.01	∅	∅
Allowable leakage .04 x Sample rate or 0.28Lpm CSA B415 (0.56)	0.2	0.2	0.2	0.2	0.2	0.2
Check OK	ok	ok	ok	ok	ok	ok

POLYTESTS
TESTING THROUGH YOUR REALITY

SAMPLING EQUIPMENT CHECK OUT

Date: 2019-01-28 Manufacturer: Wolf Steel Model: 2100

Project #: PJ 20184 Run: 1 Tech: M M Reviewer: SP

Leakage Checks Flue Gas Sampler

Plugged Probe	Pre-Test	Post Test
Vacuum (inches Hg.)	-5	-5
Rotameter Reading (mml/min.)	6	6
Flow Rate (lpm)	1.5	1.5
Allowable (.02 x Sample Rate)	30	30
Check OK	Ok	ok

Leakage Checks Pitot

Plugged Probe	Pre Test 3 H2o static	Pre Test 0.4-0.5 H2o velocity	Post Test 3 H2o Static	Post Test 0.4-0.5 H2o velocity
Vacuum (inches Hg.)	3	.4	3	.5
Check OK (no change after 15 sec.)	ok	ok	ok	ok

POLYTESTS
TESTING THROUGH YOUR REALITY

PRE-TEST SCALE AUDIT

Date: 2019. 01. 28 Manufacturer: Wolf Steel Model: 2100

Project #: PI 184 Run: 1 Tech: MM Reviewer: AP

Scale Type	Audit		Measured Weight
	Equipment #	Weight	
Platform	EM-090	44 lbs, Class F	44 lbs
Wood	EM-090	44 lbs, Class F	44 lbs
Analytical	EM-128	100 mg, Class S	100 mg
Analytical	EM-129	200 g, Class S	200 g

LIMITS OF WEIGHT RANGES

ANALYTICAL SCALE: ..... 50%-150% of dry filter weight, ± 0.1 mg
PLATFORM SCALE.....20%-80% of ideal test load weight, ± 0.1 lbs or 1%
WOOD SCALE .....20%-80% of ideal test load weight, ± 0.01 lbs or 1%

POLYTESTS
TESTING THROUGH YOUR REALITY

CONTINUOUS ANALYZERS

Date: 2019-01-28 Manufacturer: Wolf Steel Model: 2100

Project #: PT 20184 Run: 1 Tech: M M Reviewer: AP

FOR TUNNELS < 12 in

Barometric pressure (P_{bar}) 102.9 (KPa) Static pressure (P_q) −0.37 (inches w.c.)
Inside diameter: Port A _____ Port B _____.
Tunnel cross sectional area: .1963Ft^2
Pitot tube type: Standard

Traverse Point	Position (inches)			Velocity Head Δ_p (inches H_2O)	Tunnel Temperature (°F)
	6 po	7 po	8 po		
A- Centroid	3.00	3.50	4	0060	82.37
B - Centroid	3.00	3.50	4	0061	82.09
A-1	0.40	0.50	0.50	0048	82.62
A-2	1.50	1.75	2	0060	82.21
A-3	4.50	5.25	6	0053	81.99
A-4	5.60	6.5	7.5	0047	81.84
B-1	0.40	0.50	0.50	0048	82.37
B-2	1.50	1.75	2	0065	82.83
B-3	4.50	5.25	6	0052	83.41
B-4	5.60	6.5	7.5	0048	83.90
				AVERAGE	

$$v_s = K_p C_p (\sqrt{\Delta p})_{avg} \sqrt{\frac{(T_s)_{avg}}{P_s M_s}}$$

Where,
C_p = pitot tube coefficient, dimension less = 0.99 for standard pitot.
Δ_p = manometer reading (inches H_2O)
T_s = average absolute dilution tunnel temperature (°F + 460)
P_s = absolute dilution tunnel gas pressure or $P_{bar} + P_{dg}$
P_q = static pressure $\frac{\text{in. } H_2O}{\{\ 13.6\ \}}$
M_s = 28.56, wet molecular weight of stack gas (alternatively, it may be measured)
K_p = 85.49 pitot tube constant, (conversion factor for English units)

$\Delta_p$avg. = average of the square roots of the velocity heads (Δ_p) measured at each traverse point.

POLYTESTS
TESTING THROUGH YOUR REALITY

CONTINUOUS ANALYZERS

Date: 2019-01-28 Manufacturer: W&P Steel Model: 2108

Project #: PI 20184 Run: 1 Tech: M M Reviewer: BP

Pre-Test (Adjust and Record)

	ZERO		SPAN		CAL. (Record Only)	
CO	0	0	2,990	3,000	0,991	1,000
Tolerance CO		+/- 0.02		+/- 0.15		+/- 0.05
CO_2	0	0	17,91	18,00	9,73	10,00
Tolerance CO2		+/- 0.02		+/- 0.5		+/- 0.5
O_2 informative CSA B415 calculated value	na	na	na	na	na	na
	Actual	Should Be	Actual	Should Be	Actual	Should Be

Post Test (Record Only)

	Zero	Span	Cal.	Zero Drift	Limit	Span Drift	Limit	Cal. Drift	Limit	OK?	Not OK*
CO	0	2,994	0983	0	0.02	0,004	0.15	0,008	0.05	✓	
CO_2	0	17,85	9,70	0	0.02	0,06	0.5	0,03	0.5	✓	

POLYTESTS
TESTING THROUGH YOUR REALITY

TEST DATA LOG

Date: 2019-02-28 Manufacturer: Wall Steel Model: 2100

Project #: PI 20184 Run: 1 Tech: M M Reviewer: DP

RAW DRY GAS METER READINGS

		System 1	System 2	Blank
High fire test	Final (Liter)	854950,58	805410,32	642,42
	Initial (Liter)	854453,56	804921,11	621,48
Low medium fire test	Final (Liter)	856945,35	807351,08	725,83
	Initial (Liter)	854955,40	805414,98	643,42

AMBIENT CONDITIONS

	Before	After
Barometer (kPa):	102,9	102,0
Dry Bulb (F):	76,98	78,81
Humidity (%):	11,2	13,3

POLYTESTS
TESTING THROUGH YOUR REALITY

FUEL DATA

Date: 2019-01-28 Manufacturer: Wolf Steel Model: 2100

Project #: PT 20184 Run: 1 Tech: MM Reviewer: DP

FUEL DESCRIPTION:

Type of wood:

KINDLING AND START-UP LOAD

Piece Size				Weight		Meter Moisture Content (% dry)				
	x	x 11	in. MM	~~19~~ 190	lbs.	9		9		9
	x	x 11	in. MM	~~44~~ 44	lbs.	20		20		20
	x	x	in.		lbs.					
	x	x	in.		lbs.					
	x	x	in.		lbs.					
	x	x	in.		lbs.					
	x	x	in.		lbs.					
	x	x	in.		lbs.					
	x	x	in.		lbs.					

Low or medium MM

~~HIGHFIRE~~ TEST LOAD

Piece Size				Weight		Meter Moisture Content (% dry)				
325	x 350	x 16	in.	3 214	lbs.	191		198		226
350	x 350	x 16	in.	3 358	lbs.	218		216		219
375	x 350	x 16	in.	3 902	lbs.	232		230		229
	x	x	in.		lbs.					
278	x 275	x 16	in.	2036	lbs.	191		192		193
375	x 375	x 16	in.	4400	lbs.	277		278		270
	x	x	in.		lbs.					
	x	x	in.		lbs.					
	x	x	in.		lbs.					

POLYTESTS
TESTING THROUGH YOUR REALITY

FUEL DATA

Date: 2019-01-28 Manufacturer: Wolf Steel Model: 2100

Project #: PI 20184 Run: 1 Tech: MM Reviewer: BP

FUEL DESCRIPTION:

Type of wood: High mc

LOW OR MEDIUM TEST LOAD

Piece Size	Weight	Meter Moisture Content (% dry)					
x x 19 in.	2 428 lbs.	24		20		19
x x 19 in.	3 034 lbs.	26		23		19
x x 19 in.	3 156 lbs.	25		26		23
x x in.	lbs.					
x x 19 in.	5 94 lbs.	25		23		19
x x in.	lbs.					
x x in.	lbs.					
x x in.	lbs.					
x x in.	lbs.					
x x in.	lbs.					
x x in.	lbs.					
x x in.	lbs.					
x x in.	lbs.					
x x in.	lbs.					
x x in.	lbs.					

POLYTESTS
TESTING THROUGH YOUR REALITY

DILUTION TUNNEL PARTICULATE SAMPLER DATA

Date: 2019-01-28 Manufacturer: Wolf Steel Model: 2100

Project #: PT 20184 Run: 1 Tech: M M Reviewer: [illegible]

		HIGHFIRE TEST FILTERS								
		SYSTEM 1 – 1st hour				SYSTEM 1				
Pre-test Weight Record		Probe & Housing Number	Front Filter Number	Back Filter Number	gaskets	Probe & Housing Number	Front Filter Number	Back Filter Number	gaskets	Blanck
Date	Time	009	811	812	1	16	815	816	25	819
2019-01-24	17:00	61,4470		0,1611	35,3620	108,7535		0,1631	34,1021	0,1222
2019-01-28	8:00	61,4469		0,1610	35,3621	108,7536		0,1632	34,1022	0,1222

		SYSTEM 1 – 1st hour				SYSTEM 1				
Post-test Weight Record		Probe & Housing Number	Front Filter Number	Back Filter Number	gaskets	Probe & Housing Number	Front Filter Number	Back Filter Number	gaskets	Blanck
Date	Time	009	811	812	1	16	815	816	25	819
2019-01-28	13:00	61,4478		0,1675	35,3664	108,7537		0,1628	34,1036	0,1224
2019-02-07	8:00	61,4476		0,1643	35,3657	108,7537		0,1627	34,1028	0,1224
2019-02-08	10:00	61,4476		0,1643	35,3657	108,7537		0,1626	34,1028	0,1224

POLYTESTS
TESTING THROUGH YOUR REALITY

DILUTION TUNNEL PARTICULATE SAMPLER DATA

Date: 2019-01-24 Manufacturer: Wolf Steel Model: 2100

Project #: pI 20184 Run: 1 Tech: MM Reviewer: [illegible]

		HIGH FIRE TEST FILTERS			
		SYSTEM 2			
Pre-test Weight Record		Probe & Housing Number	Front Filter Number	Back Filter Number	gaskets
Date	Time	30	817	818	36
2019-01-24	17:00	110 2309		01624	34 6334
2019-01-28	8:00	110 2309		01625	34 6333

		SYSTEM 2			
Post-test Weight Record		Probe & Housing Number	Front Filter Number	Back Filter Number	gaskets
Date	Time	30	817	818	36
2019-01-28	13:00	110 2319		01679	34 6377
2019-02-07	8:00	110 2317		01657	34 6375
2019-02-08	10:08	110 2317		01656	34 6375

POLYTESTS
TESTING THROUGH YOUR REALITY

DILUTION TUNNEL PARTICULATE SAMPLER DATA

Date: 2019-01-24 Manufacturer: WolfSteel Model: 2100

Project #: PT 20184 Run: 1 Tech: MM Reviewer: [illegible]

		LOW OR MEDIUM TEST FILTERS								
		SYSTEM 1 – 1st hour				SYSTEM 1				
Pre-test Weight Record		Probe & Housing Number	Front Filter Number	Back Filter Number	gaskets	Probe & Housing Number	Front Filter Number	Back Filter Number	gaskets	Blanck
Date	Time	32	804	805	5	36	806	807	6	810
2019-01-24	17:00	110,1777		0,1651	35,4641	107,7343		0,1632	34,8605	0,1221
2019-01-28	8:00	110,1776		0,1651	35,4642	107,7343		0,1633	34,8604	0,1220

		SYSTEM 1 – 1st hour				SYSTEM 1				
Post-test Weight Record		Probe & Housing Number	Front Filter Number	Back Filter Number	gaskets	Probe & Housing Number	Front Filter Number	Back Filter Number	gaskets	Blanck
Date	Time	32	804	805	5	36	806	807	6	810
2019-01-28	18:00	110,1786		0,1653	35,4665	107,7350		0,1636	34,8622	0,1220
2019-02-07	8:00	110,1779		0,1643	35,4664	107,7345		0,1631	34,8611	0,1220
2019-02-08	10:00	110,1779		0,1644	35,4664	107,7345		0,1632	34,8611	0,1220

POLYTESTS
TESTING THROUGH YOUR REALITY

DILUTION TUNNEL PARTICULATE SAMPLER DATA

Date: 2019-01-24 Manufacturer: Wolf Steel Model: 2100

Project #: PT 20184 Run: 1 Tech: MM Reviewer: [illegible]

		LOW OR MEDIUM FIRE TEST FILTERS			
		SYSTEM 2			
Pre-test Weight Record		Probe & Housing Number	Front Filter Number	Back Filter Number	gaskets
Date	Time	43	808	809	810
2019-01-24	17:00	109 1650		0 1631	33 4120
2019-01-28	8:30	109 1651		0 1632	33 4119

		SYSTEM 2			
Post-test Weight Record		Probe & Housing Number	Front Filter Number	Back Filter Number	gaskets
Date	Time	43	808	809	810
2019-01-28	18:30	109 1657		0 1633	33 4154
2019-02-07	8:00	109 1654		0 1628	33 4141
2019-02-08	10:30	109 1654		0 1629	33 4141

Paramètres

Tous les facteurs de corrections et autres paramètres qui peuvent être modifiés par l'utilisateur du fichier sont regroupés ici.

Code verrouillage:	WOL

Description du test

Test standard	EPA	
Run #	1	
Date	28-01-2019	
Technicien	M.M	
Project #	PI 20184	

Description de l'unité

Manufacturier	WOLFSTEEL	
Modèle	2100	
Combustion system	Non-Cat	
Appliance type	WOODSTOVE	
Firebox volume	1,45	cu ft.
Appliance weight empty	n.a	lbs
Fan (no, Standard, Option)	OPTION	

Paramètres du test

Logging time	1	min
Manufacturer's rated heat output	n.a	BTU/h Donnée fournie par le manfacturier
Targeted category	1	
Targeted output	n.a	BTU/h
Cp steel	n.a	BTU/lb-°F

Échantillonnage

Blank sampling rate	0,20	cuft/min
Internal probe diameter	0,18	in.
Calibration Factor (DGM #1):	1,010	Dimensionless
Equipment number (DGM #1):	EM 178	
Calibration Factor (DGM #2):	0,987	Dimensionless
Equipment number (DGM #2):	EM 179	
Calibration Factor (DGM #3):	0,996	
Equipment number (DGM #3):	EM 070	Dimensionless

Tunnel

Targeted tunnel flow rate	140	scfm
Tunnel diameter	6	in.
Molecular weight	28,78	May be assumed to be 28,78 (EPA) Si B-415 = 29
Pitot tube type	Standard	
Pitot tube coefficient	0,99	Dimensionless

Project nu.	PI 20184
Date	28-01-2019
Technicien	m.m

Fuel data

Fuel type	Cord	
Fuel specie	Oak	
HHV	20207,0	kJ/kg
%C	49,5	
%H	6,6	
%O	43,7	
%Ash	0,2	
HHV	8689,9	Btu/lb
LHV	7600,4	Btu/lb

Default Fuel Values

	D. Fir	Oak/Maple
HHV	19 810	20 207
%C	48,73	49,5
%H	6,87	6,62
%O	43,9	43,7
%Ash	0,5	0,2
HHV (Btu/lb)	8519	8690
LHV (Btu/lb)	7451	7600

Adjunct to ASTM E XXXX Wood Heater Cordwood Test Method - May 10, 2017 Version

Cordwood Fuel Load Calculators - 10 lb/ft^3 Nominal Load Density

Core 45-65% of Total Load Weight, Remainder 35-55% of Total Load Weight

Values to be input manually

For All Usable Firebox Volumes - High Fire Test Only

Nominal Required Load Density (wet basis)	10	lb/ft^3				
Usable Firebox Volume	1,45	ft^3				
Total Nom. Load Wt. Target	14,50	lb				
Total Load Wt. Allowable Range	13,80	to	15,20	lb		
Core Target Wt. Allowable Range	6,50	to	9,40	lb		
Remainder Load Wt. Allowable Range	5,10	to	8,00	lb		
						Mid-Point
Core Load Pc. Wt. Allowable Range	2,20	to	3,60	lb		2,90
Remainder Load Pc. Wt. Allowable Range	1,50	to	8,00	lb		4,75
	Pc. #					
Core Load Piece Wt. Actual	1	2,43	lb	In Range		
	2	3,27	lb	In Range		
	3	3,16	lb	In Range		
Core Load Total. Wt. Actual		8,86	lb	In Range		
	Pc. #					
Remainder Load Piece Wt.	1	5,94	lb	In Range		
(1 to 3 Pcs.)	2		lb	NA		
	3		lb	NA		
Remainder Load Tot. Wt. Act		5,94	lb	In Range		
Total Load Wt. Actual		14,80	lb	In Range		
Core % of Total Wt.		60%		In Range	45-65%	
Remainder % of Total Wt.		40%		In Range	35-55%	
Actual Load % of Nominal Target		102%		In Range	95-105%	
Actual Fuel Load Density		10,2	lb/ft^3			
Kindling and Start-up Fuel						
Maximim Kindling Wt. (20% of Tot. Load Wt.)		2,96	lb			
Actual Kindling Wt.		1,90	lb	In Range	12,8%	
Maximum Start-up Fuel Wt. (30% of Tot. Load Wt.)		4,44	lb			
Actual Start-up Fuel Wt.		4,40	lb	In Range	29,7%	
Allowable Residual Start-up Fuel Wt. Range	1,5	to	3,0	lb		Mid-Point
Actual Residual Start-up Fuel Wt.		2,1	lb	In Range		2,2
Total Wt. All Fuel Added (wet basis)		21,10	lb			
High Fire Test Run End Point Range	Low		High			Mid-Point
Based on Fuel Load Wt. (w/tares)	1,3	to	1,6	lb		1,5
Actual Fuel Load Ending Wt.		1,4	lb	In Range		

Load pieces Length in. 19 in.

Fuel Piece Moisture Reading (%-dry basis)						Pc. Wt. Dry Basis	
1	2	3	Ave.				
24,6	22,3	19,1	22,0	In Range		1,99 lb	0,90 kg
26,3	23,1	19,4	22,9	In Range		2,66 lb	1,21 kg
25,1	26,9	23,1	25,0	In Range		2,52 lb	1,14 kg
25,1	23,1	19,9	22,7	In Range		4,84 lb	2,20 kg
			NA	NA		NA lb	NA kg
			NA	NA		NA lb	NA kg
Total Load Ave. MC (%-dry basis)			23,1	In Range			
Total Load Ave. MC % (wet basis)			18,8				
Total Test Load Weight (dry basis)						12,02 lb	5,45 kg
Kindling Moisture (%-dry basis)							
9	9	9	9,0	In Range		1,74 lb	0,79 kg
Start-up Fuel Moisture Readings (%-dry basis)							
20	20	20	20,0	In Range		3,67 lb	1,66 kg
Total Wt. All Fuel Added (dry basis)						17,43 lb	7,91 kg
Total Wt. All Fuel Burned (dry basis)						13,9 lb	6,3 kg

Load high fire

Adjunct to ASTM E XXXX Wood Heater Cordwood Test Method - May 10, 2017 Version

Cordwood Fuel Load Calculators - 12 lb/ft^3 Nominal Load Density

Core 45-65% of Total Load Weight, Remainder 35-55% of Total Load Weight

Values to be input manually

THIS DOCUMENT IS NOT AN ASTM STANDARD; IT IS UNDER CONSIDERATION WITHIN AN ASTM TECHNICAL COMMITTEE BUT HAS NOT RECEIVED ALL APPROVALS REQUIRED TO BECOME AN ASTM STANDARD. IT SHALL NOT BE REPRODUCED OR CIRCULATED OR QUOTED, IN WHOLE OR IN PART, OUTSIDE OF ASTM COMMITTEE ACTIVITIES EXCEPT WITH THE APPROVAL OF THE CHAIRMAN OF THE COMMITTEE HAVING JURISDICTION AND THE PRESIDENT OF THE SOCIETY. *COPYRIGHT ASTM, 100 BARR HARBOR DRIVE, WEST CONSHOHOCKEN, PA 19428. ALL RIGHTS RESERVED.*

For Usable Firebox Volumes up to 3.0 ft^3 - Low and Medium Fire

Nominal Required Load Density (wet basis)	12	lb/ft^3					
Usable Firebox Volume	1,45	ft^3					
Total Nom. Load Wt. Target	17,4	lb					
Total Load Wt. Allowable Range	16,53	to	18,27	lb			
Core Target Wt. Allowable Range	7,83	to	11,31	lb			
Remainder Load Wt. Allowable Range	6,09	to	9,57	lb			
						Mid-Point	
Core Load Fuel Pc. Wt. Allowable Range	2,61	to	4,35	lb		3,48	
Remainder Load Pc. Wt. Allowable Range	1,74	to	5,22	lb		3,48	
	Pc. #						
Core Load Piece Wt. Actual	1	3,21	lb	In Range			
	2	3,76	lb	In Range			
	3	3,90	lb	In Range			
Core Load Total. Wt. Actual		10,87	lb	In Range			
	Pc. #						
Remainder Load Piece Wt.	1	2,04	lb	In Range			
(2 or 3 Pcs.)	2	4,40	lb	In Range			
	3		lb	NA			
Remainder Load Piece Weight Ratio - Small/Large		46%		In Range		≤ 67%	
Remainder Load Tot. Wt. Act		6,44	lb	In Range			
Total Load Wt. Actual		17,31	lb	In Range			
Core % of Total Wt.		63%		In Range		45-65%	
Remainder % of Total Wt.		37%		In Range		35-55%	
Actual Load % of Nominal Target		99%		In Range		95-105%	
Actual Fuel Load Density		11,9	lb/ft^3				
Allowable Charcoal Bed Wt. Range (lb)	1,8	to	3,4			Mid-Point	
Actual Charcoal Bed Wt.		2,2	lb	In Range		2,6	
Actual Fuel Load Ending Wt.		0,0	lb	Valid Test		≥ 90%	
Total Wt. of Fuel Burned During Test Run lb.		17,3	lb				
Load pieces Length in.		16	in.				

Fuel Piece Moisture Reading (%-dry basis)

1	2	3	Ave.		Pc. Wt. Dry Basis		
19,1	19,8	27,6	22,2	In Range	2,63 lb	1,19	kg
21,8	21,6	21,9	21,8	In Range	3,09 lb	1,40	kg
23,2	23	22,9	23,0	In Range	3,17 lb	1,44	kg
19,1	19,2	19,3	19,2	In Range	1,71 lb	0,77	kg
27,7	27,8	27	27,5	In Range	3,45 lb	1,57	kg
			NA	NA	NA lb	NA	kg

Total Load Ave. MC % (dry basis)	23,2	In Range		
Total Load Ave. MC % (wet basis)	18,8			
Total Test Load Weight (dry basis) →			14,05 lb	6,37 kg
Total Fuel Weight Burned During Test Run (dry basis)			14,0 lb	6,37 kg

For Usable Firebox Volumes above 3.0 ft^3 - Low and Medium Fire

Nominal Required Load Density (wet basis)	12	lb/ft^3					
Usable Firebox Volume		ft^3					
Total Nom. Load Wt. Target	0	lb					
Total Load Wt. Allowable Range	0,00	to	0,00	lb			
Core Target Wt. Allowable Range	0,00	to	0,00	lb			
Remainder Load Wt. Allowable Range	0,00	to	0,00	lb			
						Mid-Point	
Core Load Fuel Pc. Wt. Allowable Range	0,00	to	0,00	lb		0,00	
Remainder Load Pc. Wt. Allowable Range	0,00	to	0,00	lb		0,00	
	Pc. #						
Core Load Piece Wt. Actual	1		lb	In Range			
	2		lb	In Range			
	3		lb	In Range			
Core Load Total. Wt. Actual		0,00	lb	In Range			
	Pc. #						
Remainder Load Piece Wt.	1		lb	In Range			
(3 or 4 Pcs.)	2		lb	In Range			
	3		lb	In Range			
	4		lb	NA			
Remainder Load Piece Weight Ratio - Small/Large		#NOMBRE!		#NOMBRE!		≤ 67%	
Remainder Load Tot. Wt. Act		0,00	lb	In Range			
Total Load Wt. Actual		0,00	lb	In Range			
Core % of Total Wt.		#DIV/0!		#DIV/0!		45-65%	
Remainder % of Total Wt.		#DIV/0!		#DIV/0!		35-55%	
Actual Load % of Nominal Target		#DIV/0!		#DIV/0!		95-105%	
Actual Fuel Load Density		#DIV/0!	lb/ft^3				
Allowable Charcoal Bed Wt. Range (lb)	0,1	to	-0,1			Mid-Point	
Actual Charcoal Bed Wt.			lb	Out of Range		0,0	
Actual Fuel Load Ending Wt.			lb	Valid Test		≥ 90%	
Total Wt. of Fuel Burned During Test Run lb.		0,0	lb				

Fuel Piece Moisture Reading (%-dry basis)

1	2	3	Ave.		Pc. Wt. Dry Basis		
			#DIV/0!	#DIV/0!	#DIV/0! lb	#DIV/0!	kg
			#DIV/0!	#DIV/0!	#DIV/0! lb	#DIV/0!	kg
			#DIV/0!	#DIV/0!	#DIV/0! lb	#DIV/0!	kg
			#DIV/0!	#DIV/0!	#DIV/0! lb	#DIV/0!	kg
			#DIV/0!	#DIV/0!	#DIV/0! lb	#DIV/0!	kg
			#DIV/0!	#DIV/0!	#DIV/0! lb	#DIV/0!	kg
			NA	NA	NA lb	NA	kg

Total Load Ave. MC % (dry basis)	#DIV/0!	#DIV/0!		
Total Load Ave. MC % (wet basis)	#DIV/0!			
Total Test Load Weight (dry basis) →			#DIV/0! lb	#DIV/0! kg
Total Fuel Weight Burned During Test Run (dry basis)			#DIV/0! lb	#DIV/0! kg

	Start	End
Barometer (kPa):	102,9	102
Barometer (in.Hg):	30,386359	30,12058866
Dry Bulb (F):	76,98	78,81
Humidity (%):	11,2	13,3
Air velocity (ft/min)	0	0

High fire test						
DGM #1	Final:	30192,295	cuft	Final:	854950,580	Liter
	Initial:	30174,743	cuft	Initial:	854453,560	Liter
DGM #2	Final:	28442,798	cuft	Final:	805410,320	Liter
	Initial:	28425,521	cuft	Initial:	804921,110	Liter
DGM room				Final:	642,420	cuft
				Initial:	621,480	cuft

min or med burnrate						
DGM #1	Final:	30262,740	cuft	Final:	856945,350	Liter
	Initial:	30192,466	cuft	Initial:	854955,400	Liter
DGM #2	Final:	28511,335	cuft	Final:	807351,080	Liter
	Initial:	28442,962	cuft	Initial:	805414,980	Liter
DGM room				Final:	725,830	cuft
				Initial:	642,420	cuft

Numéro de la ligne dans "Raw data" à partir duquel les données du test commence	99
Numéro de la ligne dans "Raw data" à partir duquel les données du highfire test commence	115
Numéro de la ligne dans "Raw data" à partir duquel les données du min ou medium fire test commence	217

Autres données à rentrer: dans preload data, load data, traverse et filter set weight

Project nu.	PI 20184
Date	28-01-2019
Technicien	M.M

Tunnel Traverse Worksheet (for velocity calculations)

Static Pressure: -0,37 in. H20
Barometer: 30,386 in. Hg

Pour un tunnel de 12" et plus, prendre 6 lectures

	TUNNEL VELOCITY	TUNNEL TEMP	SQUARE ROOT
	In. wc	°F	
A center			0,0000
B center			0,0000
A1			0,0000
A2			0,0000
A3			0,0000
A4			0,0000
A5			0,0000
A6			0,0000
B1			0,0000
B2			0,0000
B3			0,0000
B4			0,0000
B5			0,0000
B6			0,0000
AVERAGE	#DIV/0!	#DIV/0!	0,0000

PITOT CONSTANT=
0,945

Pour un tunnel moins de 12", prendre 4 lectures

	TUNNEL VELOCITY	TUNNEL TEMP	SQUARE ROOT
	In. wc	°F	
A center	0,060	82,37	0,2449
B center	0,061	82,09	0,2470
A1	0,048	82,62	0,2191
A2	0,060	82,21	0,2449
A3	0,053	81,99	0,2302
A4	0,047	81,84	0,2168
B1	0,048	82,370	0,2191
B2	0,065	82,830	0,2550
B3	0,052	83,410	0,2280
B4	0,048	83,980	0,2191
AVERAGE	0,0542	82,5710	0,2324

Project nu.	PI 20184
Date	28-01-2019
Technicien	M.M

Filter set weight highfire

	System 1 (g) 1st hour				System 1 (g)				System 2 (g)				Ambient blank (g)	Date	Heure
	probe	front	back	gasket	probe	front	back	gasket	probe	front	back	gasket	Filter		
Number	9	811	812	1	16	815	816	25	30	817	818	36	819		
Before (1)															
Before (2)															
Before (3)															
Before (4)															
Before (5)	61,4470		0,1611	35,3620	108,7535		0,1631	34,1021	110,2309		0,1624	34,6334	0,1222	2019-01-24	17:00
Before (6)	61,4469		0,1610	35,3621	108,7536		0,1632	34,1022	110,2309		0,1625	34,6333	0,1222	2019-01-28	08:00
After (1)	61,4478		0,1675	35,3664	108,7537		0,1628	34,1036	110,2319		0,1679	34,6377	0,1224	2019-01-28	13:00
After (2)	61,4476		0,1643	35,3657	108,7537		0,1627	34,1028	110,2317		0,1657	34,6375	0,1224	2019-02-07	08:00
After (3)	61,4476		0,1643	35,3657	108,7537		0,1626	34,1028	110,2317		0,1656	34,6375	0,1224	2019-02-08	10:00
After (4)															
After (5)															
After (6)	61,4476		0,1643	35,3657	108,7537		0,1626	34,1028	110,2317		0,1656	34,6375	0,1224	2019-02-08	10:00
Difference	0,0007	0,0000	0,0033	0,0036	0,0001	0,0000	-0,0006	0,0006	0,0008	0,0000	0,0031	0,0042	0,0002		
Total (mg)		7,6				7,7				8,1			0,2		
Total ajusté (mg)		**7,40**				**7,50**				**7,90**					

Project nu.	PI 20184
Date	28-01-2019
Technicien	M.M

Filter set weight Low/ medium fire

	System 1 (g) 1st hour				System 1 (g)				System 2 (g)				Ambient blank (g)	Date	Heure
	probe	front	back	gasket	probe	front	back	gasket	probe	front	back	gasket	Filter		
Number	32	804	805	5	36	806	807	6	43	808	809	40	810		
Before (1)															
Before (2)															
Before (3)															
Before (4)															
Before (5)	110,1777		0,1651	35,4641	107,7343		0,1632	34,8605	109,1650		0,1631	33,4120	0,1221	2019-01-24	17:00
Before (6)	110,1776		0,1651	35,4642	107,7343		0,1633	34,8604	109,1651		0,1632	33,4119	0,1220	2019-01-28	08:00
After (1)	110,1786		0,1653	35,4665	107,735		0,1636	34,8622	109,1657		0,1633	33,4154	0,1220	2019-01-28	18:00
After (2)	110,1779		0,1643	35,4664	107,7345		0,1631	34,8611	109,1654		0,1628	33,4141	0,1220	2019-02-07	08:00
After (3)	110,1779		0,1644	35,4664	107,7345		0,1632	34,8611	109,1654		0,1629	33,4141	0,1220	2019-02-08	10:00
After (4)															
After (5)															
After (6)	110,1779		0,1644	35,4664	107,7345		0,1632	34,8611	109,1654		0,1629	33,4141	0,1220	2019-02-08	10:00
Difference	0,0003	0,0000	-0,0007	0,0022	0,0002	0,0000	-0,0001	0,0007	0,0003	0,0000	-0,0003	0,0022	0,0000		
Total (mg)		1,8				2,6				2,2			0		
Total ajusté (mg)		**1,80**				**2,60**				**2,20**					

Project nu.	PI 20184
Date	28-01-2019
Technicien	M.M

SFBA EPA EMISSION RESULTS

Test Duration: **90** min

PRESSURE FACTOR:	DGM 1	0,98247	
	DGM 2	0,98058	
	DGM 3	1,01115	
TEMPERATURE FACTORS	DGM 1	0,97550	
	DGM 2	0,97583	
	DGM 3	0,98606	
VOLUMES SAMPLED	DGM 1	16,991	SCft
	DGM 2	16,321	Scft
	DGM 3	20,790	SCft

TOTAL TUNNEL VOLUME : 14513

SAMPLE RATIOS

Sample Train 1:	854,140
Sample Train 2:	889,200

Paticulate concentration

Sample Train 1	**0,000453**	g/dscf
Sample Train 2	**0,000496**	g/dscf
Room	**0,000010**	g/dscf

TOTAL EMISSIONS

Sample Train 1	**6,44**	g
Sample Train 2	**7,06**	g

EMISSION RATES

Sample Train 1	**4,29**	g/hr
Sample Train 2	**4,71**	g/hr

1st hour emission rate **6,49** g/hr

	Train 1	Train 2
Cs	0,0004532	0,00049628

RESULTS

Average emission rate: 4,5 g/hr

Burn Rate : 3,905 Dry kg/hr

BAROMETRIC PRESSURE

Average:	30,25347361	in Hg
Start:	30,38635856	in Hg
End:	30,12058866	in Hg

DGM CONTROLLER VALUES

DGM 1	Final:	30192,295	Cuft
	Initial:	30174,743	Cuft
DGM 2	Final:	28442,798	Cuft
	Initial:	28425,521	Cuft
DGM #3	Final:	642,420	Cuft
	Initial:	621,480	Cuft

TEMPERATURES

DGM 1	541,262	°R
DGM 2	541,080	°R

CALIBRATION FACTORS

DGM 1	1,0101
DGM 2	0,9873
DGM #3	0,9958

TUNNEL FLOW RATE: 161,255 Dscfm

PARTICULATE CATCH

Total Sample Train 1:	7,70	mg
Total Sample Train 2:	8,10	mg
Total Sample Train 1 1st hour:	7,60	mg

DEVIATION: 4,63%

*		*	*	*	*1	*2	*3	*4	*5	*6	*7	*8	Mass flow 1	DGM 1	DGM 1	Filter 1	Mass flow 2	DGM 2	DGM 2	Filter 2
Elapsed		Weight			Flue	Room	Tunnel	Unit	Unit	Unit	Unit	Unit	Reading	Inlet T	Outlet T	Temp	Reading	Inlet T	Outlet T	Temp
Time	Raw data row	Remaining	CO	CO_2	Gas	Temp	Dry Bulb	Top	Back	R.Side	L.Side	Bottom								
min		lbs	%	%	°F	°F	°F	°F	°F	°F	°F	°F	cuft/min	oF	oF	oF	cuft/min	oF	oF	oF
0,00	99,00	6,3	0,0	0,1	163,7	71,4	103,9	83,6	71,2	72,1	71,8	70,9	0,19	76,25	76,61	81,94	0,18	76,80	77,17	82,21
1,0	100,0	5,9	0,1	1,3	331,2	71,4	105,8	119,7	72,1	73,6	73,4	70,9	0,19	76,11	76,63	81,91	0,18	76,73	77,20	81,85
2,0	101,0	5,8	0,1	1,4	403,2	71,5	112,9	170,9	75,0	77,7	77,5	70,9	0,19	75,92	76,64	82,18	0,18	76,61	77,22	81,55
3,0	102,0	5,6	0,1	1,4	393,5	71,5	113,0	208,4	80,2	84,0	82,8	71,0	0,19	75,75	76,64	82,30	0,18	76,53	77,21	81,29
4,0	103,0	5,5	0,1	1,2	414,4	71,6	117,1	239,6	86,9	90,7	88,7	71,1	0,19	75,63	76,63	82,36	0,18	76,46	77,21	81,04
5,0	104,0	5,3	0,1	1,3	474,7	71,4	126,0	280,6	94,5	98,9	96,3	71,4	0,19	75,56	76,65	82,73	0,18	76,42	77,24	80,85
6,0	105,0	5,1	0,1	1,6	514,4	71,6	132,9	324,9	102,9	107,6	105,0	72,0	0,19	75,51	76,65	84,15	0,18	76,36	77,24	80,69
7,0	106,0	4,9	0,1	1,7	569,6	71,4	141,4	377,4	112,5	117,6	114,8	72,7	0,19	75,55	76,64	86,68	0,18	76,34	77,25	81,64
8,0	107,0	4,6	0,1	2,0	625,2	71,6	153,2	444,0	123,4	129,8	126,1	73,6	0,19	75,60	76,67	87,38	0,18	76,37	77,25	84,13
9,0	108,0	4,3	0,1	2,3	656,4	72,0	160,4	502,3	135,3	144,4	138,3	74,8	0,19	75,71	76,68	88,01	0,18	76,40	77,30	85,33
10,0	109,0	4,0	0,1	2,4	694,1	71,9	169,5	557,8	147,8	159,4	152,4	76,1	0,19	75,88	76,70	88,84	0,18	76,49	77,32	85,55
11,0	110,0	3,6	0,1	2,7	696,7	71,9	175,5	607,0	160,8	176,5	169,2	78,0	0,19	75,99	76,74	89,61	0,18	76,53	77,35	85,42
12,0	111,0	3,3	0,2	2,9	712,8	72,2	179,0	644,1	174,3	195,4	188,5	80,4	0,19	76,14	76,77	89,32	0,18	76,60	77,35	85,27
13,0	112,0	3,0	0,1	3,0	727,9	72,3	182,8	678,8	188,0	215,7	210,2	83,2	0,19	76,38	76,82	89,64	0,18	76,77	77,41	85,16
14,0	113,0	2,7	0,2	3,1	736,3	72,7	185,4	707,8	201,9	236,9	233,6	86,5	0,19	76,72	76,88	88,60	0,18	76,92	77,47	85,16
15,0	114,0	2,4	0,2	3,1	753,9	73,2	188,8	737,7	216,1	258,6	257,8	90,4	0,19	77,22	76,99	88,03	0,18	77,24	77,53	85,17
16,0	115,0	11,0	0,4	3,2	750,1	73,8	270,4	752,2	204,2	280,9	282,8	95,2	0,19	77,92	77,15	89,00	0,18	77,65	77,65	85,63
17,0	116,0	16,4	0,2	9,7	645,7	73,9	253,3	724,2	197,3	300,8	302,8	100,9	0,19	78,69	77,31	89,38	0,18	78,14	77,82	85,64
18,0	117,0	16,2	0,2	8,2	701,0	74,5	211,2	724,3	196,2	317,3	319,9	107,2	0,19	79,27	77,49	89,52	0,18	78,55	77,98	85,95
19,0	118,0	15,9	0,2	12,2	709,5	74,6	200,6	728,7	197,1	331,2	334,5	114,0	0,19	79,80	77,69	89,67	0,18	78,97	78,13	85,99
20,0	119,0	15,6	0,2	12,6	705,9	74,9	195,0	730,9	198,2	343,8	347,7	121,1	0,19	80,29	77,87	87,77	0,18	79,36	78,31	85,99
21,0	120,0	15,3	0,2	12,1	692,7	74,8	189,3	728,2	199,5	355,5	359,1	128,3	0,19	80,62	78,07	87,13	0,18	79,72	78,49	86,14
22,0	121,0	15,0	0,1	11,5	682,7	75,0	184,8	721,3	200,3	366,3	369,6	135,5	0,19	80,85	78,23	87,01	0,18	79,99	78,65	86,43
23,0	122,0	14,8	0,1	11,2	675,7	74,7	182,1	714,3	201,2	376,5	379,3	142,7	0,19	81,01	78,37	86,64	0,18	80,22	78,79	86,55
24,0	123,0	14,5	0,1	11,1	676,8	74,6	180,6	709,4	201,9	386,2	388,1	149,6	0,19	81,06	78,47	85,03	0,18	80,36	78,87	85,43
25,0	124,0	14,3	0,1	11,3	677,5	74,8	179,2	706,0	202,5	395,0	395,9	156,2	0,19	81,13	78,57	84,41	0,18	80,47	78,98	84,49
26,0	125,0	14,0	0,1	11,5	682,7	74,2	179,5	704,7	203,2	403,3	403,8	162,4	0,19	81,21	78,65	84,38	0,18	80,61	79,06	83,91
27,0	126,0	13,8	0,1	11,9	690,1	74,6	180,5	707,1	203,9	411,5	411,7	168,2	0,19	81,37	78,74	84,62	0,18	80,74	79,17	83,54
28,0	127,0	13,5	0,1	12,1	692,8	74,3	180,6	707,9	205,0	419,5	419,5	173,6	0,19	81,43	78,84	84,90	0,18	80,83	79,26	83,29
29,0	128,0	13,2	0,1	12,2	695,4	74,9	181,4	710,9	206,0	426,9	426,8	178,4	0,19	81,53	78,91	85,25	0,18	80,93	79,33	83,19
30,0	129,0	13,0	0,1	12,4	699,2	74,5	181,5	713,8	206,9	434,2	434,2	183,0	0,19	81,66	78,98	85,61	0,18	81,06	79,41	83,06
31,0	130,0	12,7	0,1	12,4	703,1	75,0	181,6	716,1	208,5	441,4	441,3	187,2	0,19	81,69	79,03	85,99	0,18	81,08	79,47	83,03
32,0	131,0	12,4	0,1	12,5	705,5	75,1	182,4	719,1	210,2	448,7	448,6	191,3	0,19	81,64	79,07	86,36	0,18	81,08	79,50	82,82
33,0	132,0	12,2	0,1	12,4	708,5	75,6	182,5	723,0	212,0	455,9	455,5	195,5	0,19	81,77	79,13	86,74	0,18	81,18	79,54	82,73
34,0	133,0	11,9	0,1	12,6	710,0	75,2	182,4	727,3	213,8	463,3	462,8	199,7	0,19	81,99	79,17	87,02	0,18	81,32	79,58	82,75
35,0	134,0	11,6	0,2	12,7	712,7	75,2	183,2	729,8	215,4	470,3	469,1	203,7	0,19	82,22	79,27	87,25	0,18	81,47	79,65	82,84
36,0	135,0	11,4	0,2	12,7	712,6	75,5	183,1	732,3	217,7	477,2	475,6	207,7	0,19	82,38	79,31	87,62	0,18	81,61	79,72	83,00
37,0	136,0	11,1	0,2	12,7	711,4	75,8	183,3	734,6	219,7	483,3	481,6	211,5	0,19	82,53	79,39	87,98	0,18	81,71	79,78	83,16
38,0	137,0	10,8	0,2	12,6	709,8	75,7	182,3	736,7	222,2	489,8	487,6	215,4	0,19	82,59	79,44	87,33	0,18	81,73	79,82	83,31
39,0	138,0	10,6	0,2	12,5	708,1	75,7	181,9	738,7	223,7	495,8	493,0	219,3	0,19	82,81	79,53	86,69	0,18	81,90	79,90	83,43
40,0	139,0	10,3	0,2	12,3	707,8	75,9	182,1	739,7	225,4	501,7	498,4	223,2	0,19	82,97	79,59	86,57	0,18	82,02	79,97	83,60
41,0	140,0	10,1	0,2	12,3	706,8	75,0	181,4	739,4	227,2	507,1	503,3	227,1	0,19	83,20	79,69	86,70	0,18	82,16	80,06	83,75
42,0	141,0	9,9	0,2	12,2	705,2	75,6	180,9	739,7	228,9	511,5	507,5	231,1	0,19	83,32	79,76	86,89	0,18	82,26	80,10	83,86
43,0	142,0	9,6	0,2	12,2	701,5	75,3	180,2	739,1	230,3	516,4	512,1	235,1	0,19	83,39	79,83	87,13	0,18	82,31	80,16	84,01
44,0	143,0	9,4	0,3	12,1	699,3	74,9	179,5	738,3	231,9	520,1	515,8	239,1	0,19	83,40	79,89	87,37	0,18	82,32	80,22	84,11
45,0	144,0	9,1	0,2	12,2	696,2	75,2	178,9	736,7	234,1	525,1	519,5	243,2	0,19	83,30	79,96	87,64	0,18	82,33	80,28	84,21
46,0	145,0	8,9	0,2	12,1	693,6	75,8	178,6	735,7	235,7	528,7	522,9	247,3	0,19	83,24	80,03	87,87	0,18	82,36	80,34	84,33
47,0	146,0	8,7	0,2	12,0	690,5	75,2	177,7	733,9	237,7	533,5	526,4	251,4	0,19	83,28	80,10	88,13	0,18	82,43	80,41	84,39
48,0	147,0	8,5	0,2	12,0	688,2	75,5	176,7	731,8	238,5	537,5	529,4	255,4	0,19	83,29	80,15	88,36	0,18	82,45	80,48	84,50
49,0	148,0	8,2	0,2	11,9	683,4	75,7	176,2	729,3	241,1	541,9	532,1	259,5	0,19	83,23	80,20	88,54	0,18	82,46	80,53	84,55
50,0	149,0	8,0	0,2	11,8	682,1	75,4	175,0	728,5	243,1	545,8	535,3	263,6	0,19	83,25	80,24	88,49	0,18	82,47	80,58	84,61
51,0	150,0	7,8	0,2	11,8	684,1	75,1	174,7	727,7	244,6	549,8	538,3	267,7	0,19	83,33	80,32	87,45	0,18	82,52	80,62	84,64
52,0	151,0	7,6	0,2	11,9	683,5	75,7	174,1	727,2	246,5	553,8	540,5	271,9	0,19	83,43	80,35	87,40	0,18	82,55	80,66	84,64
53,0	152,0	7,4	0,2	11,9	682,5	75,7	174,7	726,7	248,7	557,8	543,1	276,1	0,19	83,43	80,39	87,64	0,18	82,55	80,68	84,69
54,0	153,0	7,2	0,2	11,9	678,9	75,0	173,8	727,0	250,3	561,7	545,5	280,3	0,19	83,41	80,40	87,84	0,18	82,56	80,72	84,71
55,0	154,0	7,0	0,2	11,9	678,4	75,6	173,1	726,3	251,5	565,5	548,0	284,6	0,19	83,48	80,43	88,00	0,18	82,63	80,75	84,75
56,0	155,0	6,7	0,2	11,8	676,0	75,4	172,4	726,0	252,7	568,9	550,1	289,1	0,19	83,55	80,50	88,19	0,18	82,67	80,81	84,80
57,0	156,0	6,6	0,2	11,7	673,6	75,3	172,0	726,1	254,4	571,5	552,4	293,5	0,19	83,40	80,52	88,30	0,18	82,62	80,83	84,79
58,0	157,0	6,4	0,2	11,6	670,6	75,8	170,3	725,4	256,4	573,2	554,7	298,0	0,19	83,44	80,53	88,42	0,18	82,61	80,87	84,83
59,0	158,0	6,2	0,1	11,2	661,9	76,0	169,2	721,5	257,7	576,2	556,6	302,5	0,19	83,47	80,55	88,55	0,18	82,62	80,87	84,82
60,0	159,0	6,0	0,1	10,8	653,7	76,1	167,0	715,3	259,4	577,4	558,4	307,0	0,19	83,66	80,62	88,61	0,18	82,76	80,93	84,21
61,0	160,0	5,9	0,1	10,4	643,9	76,2	165,4	706,4	260,8	578,9	559,4	311,6	0,19	83,83	80,68	88,62	0,18	82,85	80,98	84,05
62,0	161,0	5,7	0,1	10,1	637,4	76,3	163,1	697,8	261,9	580,5	559,8	316,2	0,19	83,81	80,71	88,66	0,18	82,86	81,01	84,00
63,0	162,0	5,6	0,1	9,6	627,9	76,4	162,5	688,1	263,5	581,8	559,8	320,9	0,19	84,06	80,78	88,71	0,18	82,97	81,03	83,99
64,0	163,0	5,5	0,1	9,2	622,0	77,0	161,5	678,6	264,6	582,1	559,3	325,6	0,19	84,40	80,88	88,74	0,18	83,17	81,11	83,93
65,0	164,0	5,4	0,1	9,0	613,0	77,2	160,5	668,9	266,2	582,8	558,3	330,2	0,19	84,81	81,02	88,83	0,18	83,50	81,22	83,89
66,0	165,0	5,2	0,1	8,7	604,9	77,0	159,6	660,8	267,4	582,4	557,1	334,9	0,19	85,14	81,18	88,88	0,18	83,78	81,36	83,83
67,0	166,0	5,1	0,1	8,4	596,0	77,3	158,3	651,8	269,0	581,5	555,8	339,7	0,19	85,48	81,35	88,93	0,18	84,09	81,52	83,79
68,0	167,0	5,0	0,1	8,2	589,4	77,8	157,9	644,4	270,5	580,4	554,4	344,3	0,19	85,78	81,51	88,98	0,18	84,35	81,65	84,81
69,0	168,0	4,9	0,1	8,1	584,2	78,0	157,7	637,8	271,6	578,1	552,7	349,1	0,19	86,10	81,64	88,96	0,18	84,62	81,77	84,23
70,0	169,0	4,8	0,1	8,0	576,5	77,6	156,8	629,0	273,2	576,0	551,2	353,8	0,19	86,45	81,81	88,91	0,18	84,91	81,95	89,56
71,0	170,0	4,7	0,1	7,8	569,4	77,9	154,8	619,7	273,8	573,4	549,2	358,5	0,19	86,77	81,99	88,96	0,18	85,16	82,08	89,73
72,0	171,0	4,6	0,1	7,5	560,9	77,5	153,7	608,8	274,4	570,8	547,3	363,3	0,19	86,98	82,16	88,95	0,18	85,42	82,22	89,56
73,0	172,0	4,5	0,1	7,2	552,2	78,3	153,1	598,4	274,9	568,6	545,3	368,0	0,19	87,04	82,31	88,97	0,18	85,57	82,35	89,42
74,0	173,0	4,4	0,1	7,0	544,3	78,2	152,4	588,0	275,2	565,0	543,4	372,7	0,19	87,18	82,45	88,99	0,18	85,76	82,49	89,32
75,0	174,0	4,4	0,1	7,0	537,1	78,1	151,7	579,2	275,7	561,7	541,5	377,4	0,19	87,34	82,59	88,98	0,18	85,94	82,61	89,21
76,0	175,0	4,3	0,1	7,0	533,9	77,9	150,9	570,7	276,0	558,4	539,7	382,0	0,19	87,45	82,72	89,00	0,18	86,06	82,72	89,16
77,0	176,0	4,2	0,1	6,9	526,3	77,9	151,0	562,0	276,2	555,0	538,0	386,4	0,19	87,56	82,85	88,98	0,18	86,21	82,85	89,06
78,0	177,0	4,1	0,1	6,7	519,4	77,8	149,3	554,3	276,5	551,2	536,4	390,9	0,19	87,61	83,01	88,96	0,18	86,35	82,97	87,34
79,0	178,0	4,1	0,1	6,5	518,1	77,9	149,0	545,2	276,2	547,9	534,6	395,5	0,19	87,69	83,14	88,92	0,18	86,49	83,08	84,96
80,0	179,0	4,0	0,1	6,2	512,6	78,2	148,1	536,6	276,2	544,2	532,7	399,9	0,19	87,77	83,28	88,91	0,18	86,59	83,21	83,65
81,0	180,0	4,0	0,1	6,0	508,1	78,5	147,7	529,6	276,4	540,7	531,3	404,2	0,19	87,82	83,39	88,88	0,18	86,69	83,32	82,87

82,0	181,0	3,9	0,1	5,9	502,2	78,5	147,7	522,2	276,1	537,3	529,3	408,3	0,19	87,85	83,55	88,87	0,18	86,80	83,44	82,30
83,0	182,0	3,8	0,1	5,9	497,8	78,9	146,7	515,1	275,3	534,8	527,1	412,6	0,19	87,80	83,65	88,85	0,18	86,82	83,55	81,92
84,0	183,0	3,8	0,1	5,9	493,5	78,9	146,2	508,6	274,6	530,7	524,9	416,7	0,19	87,75	83,79	88,88	0,18	86,88	83,66	81,64
85,0	184,0	3,7	0,1	5,8	489,2	78,6	145,4	502,0	273,7	527,3	522,7	420,9	0,19	87,70	83,89	88,82	0,18	86,92	83,75	81,41
86,0	185,0	3,7	0,2	5,8	485,0	79,3	143,9	496,5	273,0	524,4	520,0	424,9	0,19	87,99	84,03	88,78	0,18	87,09	83,86	81,24
87,0	186,0	3,6	0,2	5,7	480,7	78,7	141,6	490,8	272,4	521,6	517,4	428,7	0,19	87,97	84,15	88,68	0,18	87,15	84,00	81,10
88,0	187,0	3,6	0,2	5,6	477,5	78,1	140,1	485,8	270,8	518,7	514,7	432,5	0,19	87,80	84,24	88,55	0,18	87,16	84,08	80,98
89,0	188,0	3,5	0,2	5,6	474,4	78,3	138,8	480,6	269,5	515,6	511,8	436,3	0,19	87,48	84,28	88,42	0,18	87,06	84,12	80,89
90,0	189,0	3,5	0,2	5,6	471,0	77,8	137,2	475,7	268,1	512,2	508,7	439,8	0,19	87,08	84,33	88,23	0,18	86,87	84,15	80,91

SFBA EPA EMISSION RESULTS

Test Duration: **363** min

PRESSURE FACTOR:	DGM 1	0,98247	
	DGM 2	0,98058	
	DGM 3	1,01115	
TEMPERATURE FACTORS	DGM 1	0,97567	
	DGM 2	0,97462	
	DGM 3	0,98512	
VOLUMES SAMPLED	DGM 1	68,041	SCft
	DGM 2	64,514	Scft
	DGM 3	82,732	SCft

TOTAL TUNNEL VOLUME : 64099

SAMPLE RATIOS

Sample Train 1:	942,059
Sample Train 2:	993,567

Paticulate concentration

Sample Train 1	**0,000038**	g/dscf
Sample Train 2	**0,000034**	g/dscf
Room	**0,000000**	g/dscf

TOTAL EMISSIONS

Sample Train 1	**2,45**	g
Sample Train 2	**2,19**	g

EMISSION RATES

Sample Train 1	**0,40**	g/hr
Sample Train 2	**0,36**	g/hr

1st hour emission rate **1,70** g/hr

	Train 1	Train 2
Cs	3,821E-05	3,4101E-05

RESULTS

Average emission rate: 0,38 g/hr

Burn Rate : 1,053 Dry kg/hr

BAROMETRIC PRESSURE

Average:	30,25347361	in Hg
Start:	30,38635856	in Hg
End:	30,12058866	in Hg

DGM CONTROLLER VALUES

DGM 1	Final:	30262,740	Cuft
	Initial:	30192,466	Cuft
DGM 2	Final:	28511,335	Cuft
	Initial:	28442,962	Cuft
DGM #3	Final:	725,830	Cuft
	Initial:	642,420	Cuft

TEMPERATURES

DGM 1	541,166	°R
DGM 2	541,747	°R

CALIBRATION FACTORS

DGM 1	1,0101
DGM 2	0,9873
DGM #3	0,9958

TUNNEL FLOW RATE: 176,581 Dscfm

PARTICULATE CATCH

Total Sample Train 1:	2,60	mg
Total Sample Train 2:	2,20	mg
Total Sample Train 1 1st hour:	1,80	mg

DEVIATION: 5,68%

*		*	*	*	*1	*2	*3	*4	*5	*6	*7	*8	Mass flow 1	DGM 1	DGM 1	Filter 1	Mass flow 2	DGM 2	DGM 2	Filter 2	
Elapsed		Weight			Flue	Room	Tunnel	Unit	Unit	Unit	Unit	Unit	Reading	Inlet T	Outlet T	Temp	Reading	Inlet T	Outlet T	Temp	
Time	Raw data row	Remaining	CO	CO_2	Gas	Temp	Dry Bulb	Top	Back	R.Side	L.Side	Bottom									
min		lbs	%	%	°F	°F	°F	°F	°F	°F	°F	°F	cuft/min	oF	oF	oF	cuft/min	oF	oF	oF	
0,00	217,00	17,2	0,4	2,9	351,4	75,6	154,9	425,4	449,1	468,4	466,4	485,1	0,19	81,27	82,16	87,10	0,18	82,23	82,75	83,22	
1,0	218,0	17,0	0,3	3,0	492,8	75,0	146,0	437,9	448,7	466,5	462,6	487,0	0,19	81,12	82,13	86,69	0,18	82,07	82,74	83,36	
2,0	219,0	16,7	0,3	8,6	614,1	75,3	157,4	486,1	447,8	464,9	458,9	488,4	0,19	81,19	82,15	86,43	0,18	82,00	82,73	83,77	
3,0	220,0	16,4	0,3	11,9	664,5	75,4	165,8	541,6	446,0	464,4	456,0	489,3	0,19	81,24	82,16	86,16	0,18	81,99	82,72	83,97	
4,0	221,0	16,1	0,3	12,5	691,5	75,6	172,2	594,2	444,6	465,1	453,7	489,9	0,19	81,23	82,13	85,97	0,18	81,88	82,69	84,08	
5,0	222,0	15,8	0,3	12,7	702,9	75,1	176,5	640,9	443,2	469,1	452,5	490,5	0,19	81,30	82,12	85,85	0,18	81,81	82,69	84,20	
6,0	223,0	15,5	0,3	12,8	707,1	75,7	179,5	676,1	442,1	473,3	452,4	490,7	0,19	81,47	82,13	85,83	0,18	81,87	82,71	84,39	
7,0	224,0	15,2	0,2	12,6	722,1	76,1	183,9	706,6	442,6	479,1	453,8	490,7	0,19	81,71	82,20	85,94	0,18	81,99	82,71	84,77	
8,0	225,0	14,9	0,2	13,3	719,8	76,6	187,1	729,4	442,6	484,7	456,6	490,3	0,19	82,11	82,28	86,04	0,18	82,22	82,78	85,06	
9,0	226,0	14,6	0,1	13,3	722,1	77,0	189,2	745,7	443,1	490,5	460,7	489,6	0,19	82,56	82,39	86,22	0,18	82,48	82,84	85,42	
10,0	227,0	14,3	0,1	13,3	724,8	76,7	191,5	759,2	443,7	496,4	465,6	488,6	0,19	83,04	82,52	86,45	0,18	82,77	82,94	85,84	
11,0	228,0	14,0	0,1	13,4	730,8	77,0	194,0	773,1	444,0	502,3	470,9	487,4	0,19	83,52	82,66	86,70	0,18	83,07	83,06	86,24	
12,0	229,0	13,7	0,1	13,5	717,9	77,3	188,6	781,6	444,4	508,2	476,5	486,1	0,19	83,99	82,83	86,94	0,18	83,41	83,17	86,51	
13,0	230,0	13,5	0,2	14,2	670,9	76,8	172,8	779,8	445,7	514,2	481,9	484,4	0,19	84,27	82,97	87,18	0,18	83,63	83,29	86,70	
14,0	231,0	13,3	0,2	14,5	609,3	76,8	156,6	769,3	446,7	519,9	486,8	482,6	0,19	84,47	83,09	87,36	0,18	83,83	83,40	86,86	
15,0	232,0	13,1	0,4	13,7	563,8	75,7	145,0	751,6	448,1	524,8	490,2	480,4	0,19	84,58	83,17	87,54	0,18	83,94	83,47	87,01	
16,0	233,0	12,9	0,4	12,8	532,1	74,3	137,9	732,0	448,2	527,2	492,2	478,4	0,19	84,50	83,22	87,63	0,18	83,90	83,51	87,12	
17,0	234,0	12,8	0,3	11,4	508,1	74,4	132,5	714,3	449,5	528,2	492,5	476,2	0,19	84,20	83,19	87,71	0,18	83,80	83,49	87,19	
18,0	235,0	12,7	0,3	10,4	488,8	75,3	129,0	695,9	450,0	528,4	491,6	473,9	0,19	83,97	83,21	87,80	0,18	83,70	83,48	87,28	
19,0	236,0	12,5	0,3	9,7	471,0	75,4	125,8	678,6	450,2	526,1	489,5	471,5	0,19	83,71	83,20	87,84	0,18	83,59	83,45	87,33	
20,0	237,0	12,4	0,4	9,1	458,3	75,5	122,7	663,1	450,1	522,9	486,6	469,0	0,19	83,57	83,19	87,87	0,18	83,47	83,42	87,40	
21,0	238,0	12,3	0,4	8,9	446,8	75,4	120,7	648,5	449,3	519,1	483,2	466,5	0,19	83,40	83,18	87,84	0,18	83,38	83,42	87,43	
22,0	239,0	12,2	0,4	8,8	439,4	75,3	119,4	634,4	448,4	514,9	479,4	464,0	0,19	83,29	83,15	87,79	0,18	83,31	83,38	87,41	
23,0	240,0	12,1	0,4	8,9	434,7	75,5	118,2	623,6	447,2	510,2	475,4	461,4	0,19	83,10	83,10	87,72	0,18	83,22	83,37	87,44	
24,0	241,0	11,9	0,4	9,1	430,7	75,4	117,3	613,5	445,9	505,1	471,4	458,9	0,19	82,94	83,05	87,65	0,18	83,15	83,34	87,43	
25,0	242,0	11,8	0,3	9,3	428,5	75,1	116,4	606,5	444,2	500,4	467,5	456,2	0,19	82,79	83,00	87,59	0,18	83,05	83,32	87,37	
26,0	243,0	11,7	0,3	9,6	429,2	75,2	115,5	600,4	442,9	495,8	463,6	453,7	0,19	82,63	82,94	87,45	0,18	82,97	83,27	87,34	
27,0	244,0	11,6	0,3	10,0	430,1	75,0	115,1	596,5	440,9	491,1	460,0	450,9	0,19	82,51	82,87	87,35	0,18	82,88	83,24	87,31	
28,0	245,0	11,4	0,3	10,4	432,1	75,3	114,5	595,0	439,4	487,1	456,6	448,2	0,19	82,46	82,83	87,24	0,18	82,78	83,20	87,24	
29,0	246,0	11,3	0,2	10,8	435,7	75,2	114,7	595,0	437,7	483,6	453,7	445,4	0,19	82,40	82,76	87,14	0,18	82,72	83,17	87,15	
30,0	247,0	11,2	0,2	11,3	441,5	75,0	114,9	597,0	436,0	480,0	451,1	442,8	0,19	82,25	82,64	87,02	0,18	82,63	83,14	87,05	
31,0	248,0	11,0	0,2	11,9	447,5	75,0	114,5	601,3	434,7	477,1	449,1	440,0	0,19	82,08	82,57	86,86	0,18	82,45	83,10	86,97	
32,0	249,0	10,9	0,3	12,4	453,4	75,0	114,8	606,4	433,6	475,3	447,4	437,4	0,19	82,03	82,46	86,74	0,18	82,34	83,03	86,86	
33,0	250,0	10,7	0,3	12,9	459,4	75,3	115,5	613,5	432,1	474,0	446,2	434,7	0,19	81,92	82,40	86,61	0,18	82,23	83,00	86,77	
34,0	251,0	10,5	0,4	13,3	464,9	75,2	115,4	621,0	431,5	473,5	445,7	432,2	0,19	81,91	82,34	86,44	0,18	82,13	82,95	86,63	
35,0	252,0	10,4	0,4	13,6	467,3	75,1	115,6	628,2	430,8	473,9	445,7	429,4	0,19	81,85	82,27	86,30	0,18	82,05	82,90	86,50	
36,0	253,0	10,2	0,4	13,7	469,0	75,1	115,3	636,2	430,6	474,8	446,1	426,9	0,19	81,90	82,26	86,18	0,18	82,09	82,86	86,38	
37,0	254,0	10,1	0,4	13,3	463,7	75,2	114,9	639,1	430,4	476,1	446,6	424,4	0,19	81,98	82,26	86,06	0,18	82,12	82,85	86,26	
38,0	255,0	10,0	0,3	12,3	454,9	75,8	114,4	639,4	430,3	477,2	446,9	422,0	0,19	82,09	82,26	85,98	0,18	82,15	82,81	86,14	
39,0	256,0	9,8	0,2	11,7	449,9	75,7	115,0	637,9	430,4	477,5	446,9	419,3	0,19	82,23	82,24	85,95	0,18	82,18	82,78	86,06	
40,0	257,0	9,7	0,2	11,6	446,8	76,2	115,6	634,5	430,7	477,5	446,7	417,0	0,19	82,45	82,29	85,94	0,18	82,30	82,78	86,01	
41,0	258,0	9,6	0,2	11,7	445,6	76,2	116,5	632,8	431,2	477,3	446,3	414,6	0,19	82,64	82,32	85,91	0,18	82,42	82,81	85,95	
42,0	259,0	9,4	0,2	11,7	443,0	76,7	117,6	629,2	430,9	477,0	445,8	412,4	0,19	82,87	82,37	85,87	0,18	82,57	82,85	85,92	
43,0	260,0	9,3	0,2	11,8	442,1	77,0	118,3	627,4	431,7	475,8	445,3	410,1	0,19	83,12	82,44	85,86	0,18	82,77	82,92	85,90	
44,0	261,0	9,2	0,2	11,9	442,0	77,0	117,2	628,1	432,2	475,1	444,6	407,7	0,19	83,34	82,51	85,83	0,18	82,92	82,99	85,85	
45,0	262,0	9,1	0,2	12,0	441,6	76,9	116,5	628,2	432,5	474,1	444,0	405,6	0,19	83,51	82,58	85,76	0,18	83,06	83,07	85,81	
46,0	263,0	8,9	0,2	12,2	442,5	76,9	115,7	627,2	433,5	473,7	443,4	403,5	0,19	83,51	82,63	85,70	0,18	83,14	83,10	85,78	
47,0	264,0	8,8	0,2	12,3	444,2	76,6	115,4	628,2	433,8	472,9	442,9	401,5	0,19	83,45	82,66	85,64	0,18	83,16	83,13	85,74	
48,0	265,0	8,7	0,2	12,5	445,9	76,4	115,0	632,4	434,3	472,2	442,6	399,5	0,19	83,35	82,69	85,56	0,18	83,14	83,11	85,67	
49,0	266,0	8,5	0,2	12,7	448,2	76,1	114,6	634,9	435,0	471,7	442,2	397,6	0,19	83,20	82,66	85,45	0,18	83,11	83,14	85,63	
50,0	267,0	8,4	0,3	12,7	450,4	76,1	113,9	636,4	435,5	471,7	441,9	395,8	0,19	82,92	82,62	85,31	0,18	83,02	83,11	85,54	
51,0	268,0	8,2	0,3	12,9	450,8	76,3	114,0	639,4	436,5	471,7	441,8	394,2	0,19	82,75	82,58	85,21	0,18	82,92	83,11	85,50	
52,0	269,0	8,1	0,3	13,0	454,2	75,9	114,0	641,1	437,1	472,1	441,8	392,3	0,19	82,65	82,56	85,10	0,18	82,86	83,08	85,44	
53,0	270,0	8,0	0,3	13,1	454,8	75,9	113,7	644,7	438,0	472,2	441,9	390,7	0,19	82,48	82,53	84,96	0,18	82,75	83,08	85,38	
54,0	271,0	7,8	0,3	13,1	456,8	75,9	113,3	647,0	439,1	473,0	442,2	389,1	0,19	82,21	82,47	84,85	0,18	82,54	83,01	85,27	
55,0	272,0	7,7	0,3	13,1	457,7	75,9	113,5	650,2	440,2	474,1	442,6	387,7	0,19	81,97	82,38	84,74	0,18	82,35	82,96	85,21	
56,0	273,0	7,5	0,3	13,1	457,1	75,4	113,4	651,5	441,0	474,9	443,2	386,3	0,19	81,87	82,32	84,64	0,18	82,26	82,93	85,10	
57,0	274,0	7,4	0,3	13,2	459,0	75,4	113,4	652,8	442,0	476,1	443,8	384,9	0,19	81,71	82,27	84,52	0,18	82,19	82,89	85,02	
58,0	275,0	7,3	0,3	13,2	458,3	75,0	113,5	652,1	442,8	477,4	444,6	383,5	0,19	81,64	82,22	84,42	0,18	82,10	82,86	84,92	
59,0	276,0	7,1	0,3	13,2	458,1	75,7	113,1	654,7	443,2	478,6	445,5	382,4	0,19	81,68	82,18	84,33	0,18	82,10	82,82	84,86	
60,0	277,0	7,0	0,3	13,2	458,2	76,0	111,7	656,4	435,9	479,5	446,4	381,1	0,19	81,42	82,10	84,22	0,18	81,94	82,78	84,18	
61,0	278,0	6,9	0,3	13,2	454,7	76,0	111,5	654,9	371,9	481,9	448,1	380,9	0,19	81,39	82,06	84,14	0,18	81,85	82,71	83,90	
62,0	279,0	6,7	0,4	13,3	452,4	76,3	111,3	651,9	341,6	482,8	449,8	380,3	0,19	81,27	81,99	84,06	0,18	81,75	82,67	83,76	
63,0	280,0	6,6	0,4	13,3	450,4	75,6	110,5	648,4	321,4	484,8	451,2	379,6	0,19	81,12	81,89	83,96	0,18	81,57	82,62	83,57	
64,0	281,0	6,5	0,4	13,4	448,6	75,8	110,3	646,7	307,3	486,5	452,9	379,1	0,19	81,00	81,83	83,87	0,18	81,47	82,59	83,37	
65,0	282,0	6,3	0,5	13,5	447,7	75,9	110,2	644,7	296,8	488,0	453,8	378,4	0,19	80,80	81,75	83,86	0,18	81,29	82,50	83,18	
66,0	283,0	6,2	0,5	13,5	440,2	75,8	109,5	640,5	288,7	490,4	454,9	377,8	0,19	80,70	81,71	83,78	0,18	81,17	82,44	83,01	
67,0	284,0	6,1	0,3	12,9	431,1	75,5	108,5	632,4	283,0	491,8	455,7	377,1	0,19	80,69	81,65	83,69	0,18	81,09	82,37	82,85	
68,0	285,0	6,0	0,2	12,0	421,7	75,7	107,6	622,0	277,7	493,7	456,3	376,3	0,19	80,58	81,57	83,57	0,18	80,96	82,29	82,68	
69,0	286,0	5,9	0,1	11,0	413,7	75,3	106,7	610,4	274,1	495,3	456,8	375,6	0,19	80,49	81,50	83,48	0,18	80,83	82,23	82,50	
70,0	287,0	5,8	0,2	10,7	405,3	74,8	106,0	600,3	270,7	495,3	456,9	374,8	0,19	80,43	81,45	83,42	0,18	80,75	82,16	82,34	
71,0	288,0	5,7	0,2	10,3	399,7	74,9	104,7	591,8	268,1	495,4	456,6	374,1	0,19	80,38	81,39	83,31	0,18	80,67	82,09	82,17	
72,0	289,0	5,6	0,2	10,2	392,4	75,3	104,9	581,7	265,7	494,1	456,3	373,4	0,19	80,48	81,38	83,27	0,18	80,75	82,07	82,00	
73,0	290,0	5,6	0,2	10,0	387,3	75,9	104,9	574,0	264,0	492,4	455,6	372,7	0,19	80,71	81,38	83,23	0,18	80,83	82,05	81,85	
74,0	291,0	5,5	0,2	10,0	382,3	75,9	105,6	565,8	261,9	490,4	454,8	371,9	0,19	81,01	81,42	83,20	0,18	81,00	82,08	81,69	
75,0	292,0	5,4	0,2	10,0	379,5	76,0	106,3	559,2	260,7	488,1	454,0	371,2	0,19	81,34	81,49	83,18	0,18	81,21	82,13	81,56	
76,0	293,0	5,3	0,2	10,0	373,5	76,1	107,2	552,7	259,2	485,4	453,1	370,5	0,19	81,68	81,58	83,14	0,18	81,44	82,19	81,45	
77,0	294,0	5,2	0,2	10,0	372,4	76,7	107,9	548,3	257,5	482,4	452,2	369,7	0,19	82,05	81,64	83,16	0,18	81,68	82,25	81,33	
78,0	295,0	5,1	0,2	10,0	372,9	76,3	107,0	544,8	256,2	479,4	451,5	369,1	0,19	82,30	81,74	83,16	0,18	81,89	82,36	81,25	
79,0	296,0	5,1	0,2	10,0	369,8	76,2	105,6	541,2	255,4	476,5	450,1	368,4	0,19	82,43	81,80	83,15	0,18	82,05	82,41	81,17	
80,0	297,0	5,0	0,2	9,6	360,7	76,3	104,5	534,2	253,9	474,4	448,7	367,7	0,19	82,48	81,87	83,13	0,18	82,14	82,46	81,02	
81,0	298,0	4,9	0,2	9,1	353,3	76,2	103,7	527,8	252,4	470,7	447,3	366,9	0,19	82,45	81,90	83,10	0,18	82,20	82,47	80,93	

82,0	299,0	4,9	0,3	8,5	348,7	75,7	102,7	523,5	251,1	467,9	445,8	366,2	0,19	82,38	81,93	83,01	0,18	82,19	82,50	80,83
83,0	300,0	4,8	0,3	8,4	345,8	76,3	101,9	518,3	249,6	464,1	444,8	365,6	0,19	82,23	81,92	82,93	0,18	82,12	82,47	80,72
84,0	301,0	4,8	0,3	8,3	343,5	76,4	101,3	512,5	247,6	460,8	443,8	364,9	0,19	82,03	81,90	82,84	0,18	82,04	82,45	80,72
85,0	302,0	4,7	0,3	8,3	341,1	76,3	100,7	505,5	245,6	456,5	443,1	364,3	0,19	81,79	81,87	82,79	0,18	81,96	82,44	80,01
86,0	303,0	4,6	0,3	8,3	336,7	76,2	100,4	498,5	245,0	452,1	443,4	363,4	0,19	81,56	81,82	82,72	0,18	81,87	82,41	82,92
87,0	304,0	4,7	0,4	8,2	336,1	76,1	99,5	493,1	242,3	449,2	441,9	363,0	0,19	81,39	81,82	82,66	0,18	81,79	82,39	86,25
88,0	305,0	4,6	0,3	8,2	332,8	76,1	99,2	487,9	240,1	445,2	441,0	362,4	0,19	81,28	81,80	82,58	0,18	81,70	82,37	86,22
89,0	306,0	4,6	0,4	7,7	323,2	76,0	98,6	481,3	238,1	441,9	440,1	361,7	0,19	81,09	81,72	82,45	0,18	81,55	82,31	85,92
90,0	307,0	4,5	0,5	7,3	316,6	76,0	98,1	474,0	236,2	438,8	438,7	361,1	0,19	80,88	81,65	82,34	0,18	81,42	82,26	85,61
91,0	308,0	4,5	0,6	7,0	311,7	75,4	97,1	466,7	234,0	435,3	437,1	360,7	0,19	80,79	81,63	82,26	0,18	81,34	82,23	85,33
92,0	309,0	4,4	0,6	7,0	308,4	75,5	96,9	460,9	232,4	432,1	435,5	360,2	0,19	80,63	81,56	82,15	0,18	81,19	82,18	85,11
93,0	310,0	4,4	0,5	7,1	305,8	75,3	96,5	454,7	230,9	428,7	433,2	359,8	0,19	80,45	81,51	82,09	0,18	81,07	82,15	84,87
94,0	311,0	4,4	0,5	7,0	301,9	74,8	95,7	448,8	229,6	425,9	431,2	359,3	0,19	80,26	81,43	81,94	0,18	80,94	82,09	84,62
95,0	312,0	4,3	0,6	6,9	299,9	74,9	95,2	444,0	228,3	422,6	428,9	359,0	0,19	80,14	81,36	81,83	0,18	80,83	82,04	84,39
96,0	313,0	4,3	0,6	7,0	295,9	74,9	95,1	438,4	226,8	420,0	426,5	358,6	0,19	79,95	81,29	81,77	0,18	80,72	82,01	84,14
97,0	314,0	4,2	0,6	6,9	293,6	74,6	94,6	432,8	225,7	416,8	424,5	358,2	0,19	79,77	81,21	81,65	0,18	80,57	81,97	83,90
98,0	315,0	4,2	0,6	6,9	290,9	75,3	94,4	427,5	224,1	414,4	422,2	357,9	0,19	79,54	81,12	81,52	0,18	80,37	81,89	83,67
99,0	316,0	4,2	0,6	6,9	289,3	75,2	94,0	422,7	223,2	412,0	420,1	357,6	0,19	79,44	81,06	81,43	0,18	80,26	81,83	83,46
100,0	317,0	4,1	0,6	7,0	287,8	74,9	93,7	418,3	221,9	410,1	418,2	357,3	0,19	79,46	81,01	81,33	0,18	80,21	81,77	83,27
101,0	318,0	4,1	0,5	7,1	286,1	75,2	93,6	415,1	221,4	407,6	416,5	357,1	0,19	79,44	80,95	81,25	0,18	80,14	81,70	83,04
102,0	319,0	4,0	0,5	7,1	285,3	75,1	93,4	412,1	220,2	405,8	414,6	356,9	0,19	79,27	80,87	81,15	0,18	80,01	81,65	82,81
103,0	320,0	4,0	0,5	7,2	283,3	75,3	93,0	409,6	219,5	403,8	413,0	356,7	0,19	79,15	80,77	81,05	0,18	79,86	81,57	82,63
104,0	321,0	4,0	0,5	7,2	282,5	75,2	92,7	407,5	218,7	402,2	411,5	356,4	0,19	78,96	80,70	80,92	0,18	79,73	81,51	82,41
105,0	322,0	3,9	0,5	7,1	281,4	74,9	92,7	406,0	218,3	400,5	409,9	356,4	0,19	78,84	80,63	80,83	0,18	79,65	81,46	82,25
106,0	323,0	3,9	0,5	7,2	281,0	75,1	92,3	403,4	217,4	399,2	408,5	356,1	0,19	78,67	80,55	80,70	0,18	79,49	81,38	82,03
107,0	324,0	3,8	0,5	7,2	279,2	75,1	92,2	402,1	216,9	397,9	406,9	356,2	0,19	78,48	80,44	80,61	0,18	79,28	81,29	81,84
108,0	325,0	3,8	0,6	7,2	279,3	75,0	91,6	399,6	216,2	397,7	405,6	356,2	0,19	78,43	80,39	80,50	0,18	79,17	81,19	81,65
109,0	326,0	3,8	0,5	7,2	278,5	74,7	92,0	398,7	215,2	396,1	404,3	356,2	0,19	78,54	80,35	80,41	0,18	79,20	81,14	81,46
110,0	327,0	3,7	0,5	7,2	277,8	74,8	93,7	397,6	214,9	395,5	403,1	356,2	0,19	78,70	80,34	80,75	0,18	79,28	81,11	81,32
111,0	328,0	3,7	0,5	7,3	277,6	75,1	94,8	396,3	214,6	393,9	402,1	356,2	0,19	78,96	80,37	83,79	0,18	79,41	81,10	81,18
112,0	329,0	3,6	0,5	7,4	277,4	75,5	96,1	395,1	214,3	393,0	401,2	356,3	0,19	79,24	80,40	83,98	0,18	79,57	81,13	81,09
113,0	330,0	3,6	0,5	7,5	276,7	75,3	97,9	393,9	214,3	392,2	400,1	356,4	0,19	79,48	80,46	83,83	0,18	79,71	81,15	81,01
114,0	331,0	3,6	0,6	7,4	280,3	75,6	98,7	393,5	214,3	391,2	399,2	356,4	0,19	79,72	80,52	83,64	0,18	79,89	81,21	80,96
115,0	332,0	3,5	0,5	7,6	283,1	75,7	96,2	394,1	214,5	390,4	398,1	356,5	0,19	79,91	80,58	83,49	0,18	80,05	81,25	80,91
116,0	333,0	3,5	0,4	7,7	283,5	75,7	95,6	394,1	214,1	390,0	397,3	356,6	0,19	79,99	80,62	83,27	0,18	80,16	81,28	80,81
117,0	334,0	3,4	0,4	7,7	282,2	75,4	94,8	394,9	214,9	389,3	396,9	356,5	0,19	79,98	80,67	83,07	0,18	80,20	81,30	82,14
118,0	335,0	3,3	0,4	7,5	280,4	75,5	94,2	394,1	215,1	388,9	395,4	356,6	0,19	79,90	80,66	83,25	0,18	80,22	81,31	85,77
119,0	336,0	3,3	0,5	7,2	277,9	75,6	93,5	392,5	215,4	387,8	395,3	356,5	0,19	79,80	80,67	85,52	0,18	80,19	81,33	87,44
120,0	337,0	3,3	0,6	6,6	272,2	75,5	92,7	389,7	214,5	387,4	393,5	356,7	0,19	79,69	80,65	85,70	0,18	80,16	81,31	87,42
121,0	338,0	3,3	0,8	5,9	266,1	75,4	92,2	384,1	213,8	386,9	392,4	356,8	0,19	79,47	80,60	85,38	0,18	80,04	81,28	86,99
122,0	339,0	3,2	0,9	5,6	261,4	75,3	91,7	378,6	213,2	385,2	390,9	356,9	0,19	79,28	80,53	84,98	0,18	79,91	81,25	86,55
123,0	340,0	3,2	0,9	5,6	257,6	75,2	91,0	372,9	212,3	384,1	389,6	357,0	0,19	79,07	80,49	84,66	0,18	79,80	81,23	86,18
124,0	341,0	3,2	0,9	5,6	254,2	74,8	90,7	367,0	211,3	382,6	388,0	357,0	0,19	78,89	80,43	84,32	0,18	79,62	81,17	85,73
125,0	342,0	3,2	0,9	5,6	251,4	75,0	90,7	361,1	210,0	381,2	386,6	357,0	0,19	78,75	80,39	83,99	0,18	79,51	81,12	85,40
126,0	343,0	3,2	0,8	5,5	249,3	75,0	90,0	355,6	208,5	380,0	384,9	357,2	0,19	78,57	80,32	83,74	0,18	79,39	81,04	85,03
127,0	344,0	3,1	0,8	5,5	246,0	74,8	89,6	350,2	208,1	378,3	383,3	357,3	0,19	78,43	80,27	83,43	0,18	79,30	80,98	84,68
128,0	345,0	3,1	0,9	5,5	243,5	74,9	89,3	344,9	206,6	377,0	381,7	357,3	0,19	78,34	80,21	83,16	0,18	79,19	80,94	84,32
129,0	346,0	3,1	0,9	5,5	241,3	74,9	88,9	340,4	205,4	375,3	380,1	357,4	0,19	78,11	80,12	82,91	0,18	79,01	80,87	84,01
130,0	347,0	3,1	0,9	5,5	239,0	74,3	88,6	336,5	204,3	374,2	378,4	357,7	0,19	77,97	80,05	82,67	0,18	78,87	80,79	83,67
131,0	348,0	3,1	0,9	5,5	236,7	74,8	88,2	332,1	203,4	372,7	376,7	357,8	0,19	77,87	79,98	82,42	0,18	78,75	80,73	83,36
132,0	349,0	3,0	0,9	5,6	234,8	74,5	88,2	328,4	202,3	371,2	375,3	358,0	0,19	77,86	79,95	82,19	0,18	78,72	80,67	83,09
133,0	350,0	3,0	0,9	5,5	232,8	74,7	88,1	325,0	201,5	370,4	373,7	358,3	0,19	77,77	79,88	81,95	0,18	78,64	80,62	82,81
134,0	351,0	3,0	0,9	5,6	232,0	74,6	87,6	322,2	201,5	368,4	372,8	358,4	0,19	77,60	79,80	82,45	0,18	78,48	80,54	82,98
135,0	352,0	3,0	0,9	5,5	231,1	74,8	87,3	318,5	200,3	367,4	371,3	358,6	0,19	77,49	79,72	83,33	0,18	78,37	80,48	83,52
136,0	353,0	3,0	0,9	5,6	229,4	74,7	87,2	316,0	200,1	365,9	370,2	358,9	0,19	77,39	79,64	83,62	0,18	78,25	80,40	83,79
137,0	354,0	2,9	0,9	5,6	229,5	74,7	87,1	312,9	199,2	364,6	368,9	359,0	0,19	77,33	79,58	84,91	0,18	78,20	80,34	85,12
138,0	355,0	2,9	0,9	5,7	228,9	74,6	86,9	310,6	198,1	363,9	367,2	359,5	0,19	77,31	79,52	84,88	0,18	78,11	80,28	85,21
139,0	356,0	2,9	0,9	5,6	227,5	74,5	87,9	308,2	196,7	363,4	365,8	360,0	0,19	77,36	79,49	84,63	0,18	78,10	80,25	84,99
140,0	357,0	2,9	0,9	5,7	225,7	74,8	89,4	306,2	195,8	362,1	364,7	360,3	0,19	77,67	79,46	84,33	0,18	78,23	80,20	84,74
141,0	358,0	2,9	0,9	5,8	224,5	75,1	91,3	304,4	195,3	360,9	363,7	360,7	0,19	78,03	79,51	84,08	0,18	78,46	80,24	84,52
142,0	359,0	2,9	0,9	5,8	223,5	75,1	93,3	302,6	194,7	360,1	362,3	361,1	0,19	78,37	79,60	83,79	0,18	78,65	80,26	84,24
143,0	360,0	2,8	0,9	5,8	222,0	75,4	94,5	301,3	194,5	358,8	361,2	361,4	0,19	78,70	79,67	83,59	0,18	78,92	80,34	84,07
144,0	361,0	2,8	0,9	5,8	220,9	75,5	95,7	299,5	194,2	357,9	360,1	361,6	0,19	79,04	79,75	83,35	0,18	79,13	80,42	83,87
145,0	362,0	2,8	1,0	5,8	219,7	75,4	96,7	298,3	193,7	356,8	359,0	362,0	0,19	79,32	79,83	83,13	0,18	79,37	80,51	83,68
146,0	363,0	2,8	1,0	5,8	219,4	75,5	97,4	296,8	193,1	355,8	357,9	362,3	0,19	79,61	79,92	82,96	0,18	79,58	80,57	83,53
147,0	364,0	2,8	1,0	5,8	217,9	75,8	98,2	295,6	192,8	354,6	357,0	362,6	0,19	79,83	80,04	82,81	0,18	79,81	80,66	83,36
148,0	365,0	2,8	1,0	5,9	217,1	75,7	99,0	293,9	192,8	354,0	356,0	363,0	0,19	80,03	80,13	82,69	0,18	80,01	80,77	83,23
149,0	366,0	2,7	1,0	5,8	217,2	76,2	99,3	292,8	192,4	352,9	355,0	363,4	0,19	80,27	80,24	82,55	0,18	80,21	80,87	83,08
150,0	367,0	2,7	0,9	5,9	216,4	76,2	99,9	291,5	191,9	351,9	354,1	363,6	0,19	80,46	80,31	82,44	0,18	80,39	80,93	82,97
151,0	368,0	2,7	1,0	5,9	215,2	76,4	100,3	290,6	191,8	351,1	353,1	364,1	0,19	80,65	80,45	82,36	0,18	80,61	81,05	82,87
152,0	369,0	2,7	1,0	5,9	214,8	76,3	100,8	289,3	191,3	350,1	352,2	364,5	0,19	80,84	80,56	82,28	0,18	80,79	81,13	82,76
153,0	370,0	2,7	1,0	5,9	214,3	76,6	101,2	288,5	191,0	349,5	351,4	364,7	0,19	81,01	80,69	82,22	0,18	81,00	81,24	82,66
154,0	371,0	2,7	1,0	5,9	214,0	76,5	101,5	287,8	190,7	348,5	350,6	365,0	0,19	81,22	80,83	82,17	0,18	81,19	81,36	82,61
155,0	372,0	2,7	1,0	5,9	213,1	76,7	101,8	286,7	190,5	347,6	349,8	365,4	0,19	81,42	80,95	82,15	0,18	81,36	81,47	82,53
156,0	373,0	2,6	1,1	5,9	212,8	76,8	102,0	285,8	190,3	346,9	349,0	365,6	0,19	81,58	81,07	82,12	0,18	81,57	81,56	82,48
157,0	374,0	2,6	1,1	5,9	212,1	76,8	102,4	285,1	190,1	346,0	348,3	366,0	0,19	81,69	81,19	82,12	0,18	81,71	81,66	82,44
158,0	375,0	2,6	1,1	6,0	211,8	76,9	102,8	284,1	189,8	345,3	347,5	366,3	0,19	81,84	81,34	82,11	0,18	81,90	81,80	82,39
159,0	376,0	2,6	1,1	5,9	211,6	77,1	102,8	283,4	189,7	344,5	346,8	366,6	0,19	81,97	81,46	82,11	0,18	82,04	81,90	82,37
160,0	377,0	2,6	1,1	5,9	210,9	77,1	103,2	282,7	189,3	343,9	346,2	366,9	0,19	82,06	81,57	82,09	0,18	82,19	81,99	82,36
161,0	378,0	2,6	1,0	5,9	210,1	77,1	103,2	282,2	189,1	343,3	345,5	367,2	0,19	82,18	81,69	82,14	0,18	82,34	82,08	82,35
162,0	379,0	2,5	1,0	5,9	210,0	77,3	103,4	281,6	188,6	342,5	345,0	367,5	0,19	82,32	81,81	82,14	0,18	82,51	82,22	82,36
163,0	380,0	2,5	1,0	5,9	210,3	77,4	103,4	281,1	188,3	341,6	344,3	367,8	0,19	82,41	81,89	82,16	0,18	82,61	82,28	82,31
164,0	381,0	2,5	1,0	6,0	210,4	77,5	104,0	280,6	188,1	341,1	343,8	367,9	0,19	82,51	81,99	82,18	0,18	82,74	82,38	82,31
165,0	382,0	2,5	1,0	5,9	209,6	77,8	104,5	279,7	188,1	340,4	343,3	368,3	0,19	82,63	82,10	82,24	0,18	82,88	82,47	82,32
166,0	383,0	2,5	1,0	5,9	209,0	77,7	104,3	279,3	187,7	339,8	342,7	368,6	0,19	82,77	82,24	82,28	0,18	83,03	82,58	82,30
167,0	384,0	2,5	1,0	5,9	209,4	77,7	104,5	278,7	187,3	339,2	342,0	368,6	0,19	82,92	82,35	82,31	0,18	83,20	82,69	82,31

168,0	385,0	2,4	1,0	5,9	209,3	77,8	105,0	278,2	187,3	338,8	341,5	369,0	0,19	83,05	82,49	82,37	0,18	83,34	82,80	82,34
169,0	386,0	2,4	1,0	6,0	209,0	77,6	105,1	277,8	187,0	338,1	340,8	369,2	0,19	83,21	82,63	82,43	0,18	83,51	82,93	82,36
170,0	387,0	2,4	1,0	6,0	209,5	77,8	105,2	277,8	186,8	337,6	340,2	369,5	0,19	83,31	82,72	82,46	0,18	83,62	83,01	82,37
171,0	388,0	2,4	1,0	6,0	209,0	77,9	105,3	277,5	186,9	337,0	339,6	369,6	0,19	83,39	82,82	82,51	0,18	83,75	83,09	82,39
172,0	389,0	2,4	1,0	6,0	209,1	78,0	105,3	276,9	186,5	336,4	339,0	370,0	0,19	83,55	82,97	82,57	0,18	83,92	83,24	82,44
173,0	390,0	2,4	1,0	6,0	208,8	78,2	105,8	276,7	186,4	336,0	338,5	370,1	0,19	83,68	83,11	82,63	0,18	84,08	83,36	82,44
174,0	391,0	2,4	1,0	6,0	207,8	78,1	106,0	276,0	186,1	335,4	337,9	370,4	0,19	83,79	83,25	82,68	0,18	84,22	83,48	82,46
175,0	392,0	2,3	1,0	6,0	207,6	78,1	106,3	275,7	186,0	335,0	337,6	370,6	0,19	83,90	83,35	82,75	0,18	84,35	83,60	82,53
176,0	393,0	2,3	1,0	6,0	208,1	78,2	106,5	275,3	185,9	334,5	337,0	370,8	0,19	84,04	83,50	82,84	0,18	84,49	83,72	82,58
177,0	394,0	2,3	1,0	6,0	208,0	78,3	106,7	274,8	185,5	334,1	336,6	370,8	0,19	84,15	83,59	82,90	0,18	84,59	83,83	82,59
178,0	395,0	2,3	1,0	6,0	207,4	78,4	106,7	274,5	185,5	333,5	336,1	371,1	0,19	84,25	83,68	82,96	0,18	84,71	83,91	82,65
179,0	396,0	2,3	1,1	6,0	207,5	78,5	106,8	274,0	185,6	333,1	335,8	371,3	0,19	84,35	83,78	83,00	0,18	84,81	83,99	82,65
180,0	397,0	2,3	1,1	6,0	208,2	78,5	106,9	273,5	185,5	332,7	335,2	371,5	0,19	84,45	83,89	83,09	0,18	84,93	84,12	82,71
181,0	398,0	2,2	1,1	6,1	208,7	78,5	107,1	273,4	185,4	332,3	334,8	371,6	0,19	84,54	84,00	83,15	0,18	85,05	84,22	82,76
182,0	399,0	2,2	1,2	6,1	208,6	78,6	107,2	273,1	185,3	332,2	334,3	371,7	0,19	84,61	84,09	83,21	0,18	85,15	84,32	82,81
183,0	400,0	2,2	1,2	6,1	209,0	78,7	107,5	273,1	185,4	331,9	333,9	371,8	0,19	84,69	84,21	83,31	0,18	85,25	84,42	82,87
184,0	401,0	2,2	1,2	6,1	207,4	78,9	107,7	272,3	185,3	331,7	333,6	371,9	0,19	84,80	84,33	83,37	0,18	85,40	84,54	82,92
185,0	402,0	2,2	1,2	6,0	206,5	78,7	107,7	272,3	185,2	331,6	333,3	372,1	0,19	84,79	84,40	83,42	0,18	85,43	84,59	82,98
186,0	403,0	2,2	1,1	6,0	206,4	78,9	108,0	271,6	185,1	331,1	332,9	372,2	0,19	84,94	84,50	83,51	0,18	85,50	84,66	83,06
187,0	404,0	2,1	1,1	6,0	205,8	78,8	107,5	271,7	185,2	330,9	332,5	372,3	0,19	85,04	84,63	83,59	0,18	85,61	84,77	83,11
188,0	405,0	2,1	1,1	6,0	205,2	78,9	105,1	271,4	185,0	330,5	332,2	372,3	0,19	85,07	84,68	83,63	0,18	85,69	84,84	83,16
189,0	406,0	2,1	1,1	5,9	205,6	78,6	103,5	271,0	185,1	330,0	331,8	372,5	0,19	84,97	84,74	83,70	0,18	85,67	84,89	83,18
190,0	407,0	2,1	1,0	5,9	206,1	78,4	101,7	270,5	184,5	329,5	331,3	372,7	0,19	84,79	84,69	83,75	0,18	85,58	84,89	83,22
191,0	408,0	2,1	1,0	5,9	205,9	78,5	100,3	270,1	184,3	329,2	330,9	372,8	0,19	84,63	84,67	83,78	0,18	85,49	84,89	83,25
192,0	409,0	2,1	1,0	5,9	206,4	78,6	99,0	269,9	184,0	328,8	330,4	373,0	0,19	84,39	84,61	83,79	0,18	85,35	84,87	83,27
193,0	410,0	2,1	1,0	5,8	206,9	78,4	97,1	270,0	183,6	328,2	330,0	373,0	0,19	84,18	84,59	83,78	0,18	85,19	84,84	83,24
194,0	411,0	2,0	1,0	5,9	206,8	78,6	96,0	269,7	183,7	327,7	329,6	373,1	0,19	83,95	84,51	83,79	0,18	85,02	84,77	83,26
195,0	412,0	2,0	1,0	5,9	207,4	78,3	95,4	269,2	183,8	327,3	329,2	373,2	0,19	83,76	84,46	83,79	0,18	84,87	84,75	83,25
196,0	413,0	2,0	1,0	5,8	207,5	78,1	94,6	269,1	183,1	326,9	328,7	373,3	0,19	83,62	84,40	83,77	0,18	84,76	84,71	83,20
197,0	414,0	2,0	1,0	5,9	207,7	78,0	93,5	269,0	182,9	326,5	328,3	373,5	0,19	83,46	84,35	83,76	0,18	84,62	84,69	83,17
198,0	415,0	2,0	1,0	5,8	208,0	78,0	93,0	268,8	183,0	326,3	327,9	373,5	0,19	83,27	84,29	83,73	0,18	84,45	84,63	83,11
199,0	416,0	2,0	1,0	5,9	207,7	77,9	93,8	268,4	182,6	326,3	327,6	373,7	0,19	83,11	84,23	83,69	0,18	84,31	84,57	83,07
200,0	417,0	1,9	1,0	5,9	206,8	78,0	95,9	268,5	182,7	326,3	327,3	373,9	0,19	83,05	84,18	83,67	0,18	84,20	84,56	83,05
201,0	418,0	1,9	1,0	5,9	205,7	78,1	98,1	268,1	182,5	326,0	326,9	374,0	0,19	83,11	84,18	83,65	0,18	84,20	84,53	83,02
202,0	419,0	1,9	1,0	6,0	204,3	78,4	99,7	267,8	182,6	325,6	326,6	374,2	0,19	83,27	84,22	83,63	0,18	84,27	84,57	83,02
203,0	420,0	1,9	1,0	6,0	203,8	78,3	100,7	267,8	182,8	325,6	326,3	374,4	0,19	83,45	84,24	83,56	0,18	84,33	84,61	82,98
204,0	421,0	1,9	1,0	6,0	203,5	78,5	102,1	267,9	182,9	325,3	326,1	374,6	0,19	83,63	84,33	83,60	0,18	84,44	84,67	82,97
205,0	422,0	1,9	1,0	6,1	202,9	78,5	101,9	267,6	183,1	325,3	325,9	374,7	0,19	83,85	84,40	83,58	0,18	84,57	84,74	82,95
206,0	423,0	1,8	1,0	6,0	203,1	78,7	100,1	267,5	182,8	324,9	325,7	374,8	0,19	83,96	84,46	83,56	0,18	84,65	84,80	82,94
207,0	424,0	1,8	1,0	6,0	203,6	78,4	99,0	267,4	183,0	324,7	325,4	375,0	0,19	83,92	84,47	83,53	0,18	84,64	84,82	82,91
208,0	425,0	1,8	1,0	5,9	204,3	78,3	97,2	267,0	183,1	324,7	325,2	375,1	0,19	83,81	84,49	83,52	0,18	84,60	84,84	82,89
209,0	426,0	1,8	1,0	5,8	203,7	78,1	96,3	266,9	182,9	324,5	325,0	375,3	0,19	83,66	84,47	83,48	0,18	84,53	84,86	82,86
210,0	427,0	1,8	1,0	5,8	204,3	78,2	95,1	266,4	183,1	324,5	324,7	375,5	0,19	83,51	84,46	83,48	0,18	84,44	84,85	82,80
211,0	428,0	1,8	1,0	5,7	204,5	78,0	94,2	266,2	182,9	324,2	324,4	375,6	0,19	83,33	84,42	83,42	0,18	84,33	84,83	82,78
212,0	429,0	1,8	1,0	5,7	204,5	78,0	93,4	265,8	182,6	324,2	324,1	375,8	0,19	83,14	84,37	83,36	0,18	84,21	84,81	82,75
213,0	430,0	1,7	1,0	5,7	204,5	77,8	92,4	265,5	182,6	323,8	323,8	375,9	0,19	82,99	84,34	83,33	0,18	84,09	84,77	82,69
214,0	431,0	1,7	1,0	5,7	204,3	77,8	91,9	265,5	182,6	323,7	323,5	376,1	0,19	82,82	84,29	83,26	0,18	83,96	84,75	82,63
215,0	432,0	1,7	1,0	5,6	204,5	77,6	91,2	265,0	182,4	323,5	323,2	376,2	0,19	82,68	84,22	83,22	0,18	83,84	84,71	82,56
216,0	433,0	1,7	0,9	5,4	204,3	77,6	91,2	265,2	182,0	323,3	322,8	376,1	0,19	82,55	84,18	83,10	0,18	83,73	84,68	82,49
217,0	434,0	1,7	0,9	5,4	203,4	77,8	90,5	264,6	182,0	322,9	322,3	376,2	0,19	82,43	84,12	83,02	0,18	83,61	84,61	82,41
218,0	435,0	1,7	1,0	5,4	203,6	77,6	90,3	264,3	181,7	322,7	321,9	376,4	0,19	82,38	84,09	82,97	0,18	83,52	84,60	82,36
219,0	436,0	1,7	0,9	5,4	203,6	77,7	90,0	263,8	181,5	322,3	321,4	376,4	0,19	82,29	84,02	82,90	0,18	83,42	84,56	82,30
220,0	437,0	1,6	0,9	5,4	202,9	77,7	89,7	263,1	181,2	322,0	320,9	376,5	0,19	82,20	83,96	82,82	0,18	83,30	84,50	82,21
221,0	438,0	1,6	1,0	5,4	202,4	77,8	89,5	262,5	181,1	321,8	320,4	376,6	0,19	82,13	83,91	82,74	0,18	83,23	84,47	82,15
222,0	439,0	1,6	1,0	5,4	201,9	77,4	89,3	262,0	180,8	321,6	320,0	376,6	0,19	82,09	83,87	82,66	0,18	83,18	84,43	82,05
223,0	440,0	1,6	1,0	5,4	201,9	77,3	89,1	261,9	180,6	321,3	319,5	376,6	0,19	82,03	83,82	82,58	0,18	83,10	84,38	81,99
224,0	441,0	1,6	1,0	5,4	202,2	77,0	89,1	261,1	180,3	320,8	319,1	376,6	0,19	81,93	83,79	82,52	0,18	83,03	84,35	81,92
225,0	442,0	1,6	1,0	5,5	202,1	77,3	88,8	261,0	180,1	320,6	318,6	376,6	0,19	81,87	83,74	82,47	0,18	82,95	84,30	81,82
226,0	443,0	1,6	1,0	5,5	201,6	77,4	88,7	260,5	180,1	320,2	318,3	376,6	0,19	81,79	83,70	82,34	0,18	82,88	84,28	81,74
227,0	444,0	1,5	1,0	5,5	201,2	77,1	88,6	260,6	180,0	320,0	317,9	376,5	0,19	81,72	83,64	82,27	0,18	82,79	84,22	81,68
228,0	445,0	1,5	1,0	5,4	200,8	77,2	88,4	259,8	179,7	319,6	317,3	376,6	0,19	81,69	83,61	82,17	0,18	82,72	84,18	81,60
229,0	446,0	1,5	1,0	5,4	200,5	77,2	88,4	259,3	179,6	319,3	317,0	376,5	0,19	81,62	83,56	82,09	0,18	82,66	84,14	81,53
230,0	447,0	1,5	1,0	5,5	200,3	77,2	88,4	258,8	179,4	319,0	316,6	376,4	0,19	81,59	83,54	82,01	0,18	82,59	84,10	81,48
231,0	448,0	1,5	1,0	5,5	200,1	77,2	88,3	258,5	179,2	318,7	316,3	376,4	0,19	81,56	83,50	81,94	0,18	82,56	84,06	81,38
232,0	449,0	1,5	1,0	5,5	199,9	77,1	88,3	257,9	178,8	318,6	316,0	376,2	0,19	81,47	83,46	81,86	0,18	82,48	84,03	81,31
233,0	450,0	1,4	1,0	5,5	199,7	77,0	88,0	257,7	178,8	318,2	315,7	376,0	0,19	81,41	83,41	81,77	0,18	82,38	83,97	81,23
234,0	451,0	1,4	1,0	5,5	199,7	77,0	88,0	257,5	178,7	317,7	315,5	375,9	0,19	81,38	83,38	81,71	0,18	82,34	83,94	81,16
235,0	452,0	1,4	1,0	5,5	199,6	77,0	87,8	257,5	178,6	317,5	315,2	375,8	0,19	81,32	83,34	81,61	0,18	82,28	83,88	81,08
236,0	453,0	1,4	1,0	5,5	199,0	76,9	87,8	257,2	178,5	317,3	315,0	375,7	0,19	81,28	83,28	81,54	0,18	82,25	83,85	81,01
237,0	454,0	1,4	1,0	5,5	198,6	77,0	87,7	257,0	178,5	317,0	314,8	375,6	0,19	81,20	83,24	81,49	0,18	82,16	83,82	80,92
238,0	455,0	1,4	0,9	5,5	198,7	77,1	87,6	256,6	178,5	316,7	314,4	375,4	0,19	81,19	83,19	81,44	0,18	82,12	83,79	80,87
239,0	456,0	1,4	1,0	5,5	198,1	76,8	87,4	256,3	178,5	316,4	314,4	375,3	0,19	81,15	83,16	81,36	0,18	82,06	83,74	80,77
240,0	457,0	1,3	0,9	5,5	198,1	77,0	87,5	256,2	178,4	316,0	314,1	375,1	0,19	81,13	83,12	81,30	0,18	82,01	83,70	80,74
241,0	458,0	1,3	0,9	5,4	198,0	76,6	87,3	255,7	178,2	315,9	313,8	374,9	0,19	81,09	83,07	81,22	0,18	81,96	83,67	80,68
242,0	459,0	1,3	0,9	5,3	197,6	77,1	87,2	255,4	178,5	315,6	313,7	374,7	0,19	80,97	83,03	81,17	0,18	81,90	83,62	80,64
243,0	460,0	1,3	0,9	5,3	197,3	77,2	87,3	255,2	178,2	315,3	313,4	374,6	0,19	80,91	83,00	81,10	0,18	81,81	83,57	80,56
244,0	461,0	1,3	0,9	5,3	196,6	77,0	87,3	254,9	177,9	315,1	313,1	374,5	0,19	80,91	82,94	81,03	0,18	81,80	83,55	80,51
245,0	462,0	1,3	0,9	5,3	196,3	76,7	87,1	254,8	177,8	314,9	313,0	374,3	0,19	80,87	82,90	80,97	0,18	81,74	83,49	80,43
246,0	463,0	1,3	0,9	5,3	196,0	77,1	87,0	254,3	177,6	314,5	312,7	374,1	0,19	80,84	82,90	80,91	0,18	81,70	83,47	80,38
247,0	464,0	1,2	0,9	5,3	196,2	77,1	86,9	253,9	177,4	314,2	312,5	374,0	0,19	80,80	82,84	80,86	0,18	81,63	83,42	80,33
248,0	465,0	1,2	0,9	5,3	195,8	76,8	86,9	253,4	177,1	313,9	312,4	373,7	0,19	80,69	82,79	80,80	0,18	81,58	83,37	80,24
249,0	466,0	1,2	0,9	5,3	195,4	76,7	86,8	253,3	176,8	313,6	311,9	373,6	0,19	80,60	82,76	80,76	0,18	81,53	83,36	80,20
250,0	467,0	1,2	0,9	5,3	194,8	76,6	86,8	253,3	176,6	313,1	311,6	373,3	0,19	80,52	82,70	80,66	0,18	81,48	83,32	80,12
251,0	468,0	1,2	0,9	5,3	194,3	76,8	86,8	253,4	177,5	312,5	311,8	372,9	0,19	80,47	82,65	82,33	0,18	81,42	83,26	81,33
252,0	469,0	1,2	0,9	5,2	194,0	76,8	86,6	252,9	177,5	312,4	311,4	372,6	0,19	80,42	82,59	83,54	0,18	81,39	83,24	82,63
253,0	470,0	1,2	0,9	5,1	194,2	76,7	86,6	252,8	178,0	311,7	311,4	372,3	0,19	80,50	82,58	84,83	0,18	81,39	83,19	83,75

254,0	471,0	1,2	0,9	5,2	194,3	76,8	86,4	252,5	178,2	311,5	311,2	372,1	0,19	80,46	82,53	85,93	0,18	81,35	83,15	85,08
255,0	472,0	1,1	0,9	5,2	194,2	76,5	86,5	252,2	177,9	310,9	310,8	371,8	0,19	80,41	82,50	87,05	0,18	81,30	83,13	85,94
256,0	473,0	1,1	0,9	5,2	194,0	76,7	86,4	251,4	177,4	310,7	310,1	371,6	0,19	80,47	82,45	86,94	0,18	81,27	83,09	85,83
257,0	474,0	1,1	0,9	5,2	194,1	76,7	86,4	250,8	176,8	310,1	309,9	371,5	0,19	80,38	82,43	86,59	0,18	81,25	83,06	85,60
258,0	475,0	1,1	0,9	5,2	193,9	76,6	86,4	250,2	176,3	309,6	309,7	371,3	0,19	80,35	82,39	86,21	0,18	81,20	83,03	85,39
259,0	476,0	1,1	1,0	5,2	193,6	76,5	86,3	250,2	176,0	308,8	309,5	371,0	0,19	80,30	82,33	85,86	0,18	81,17	83,00	85,16
260,0	477,0	1,1	1,0	5,2	194,4	76,4	86,2	249,5	175,6	308,3	309,4	370,8	0,19	80,23	82,30	85,49	0,18	81,10	82,95	84,90
261,0	478,0	1,1	1,0	5,2	194,8	76,4	86,2	249,3	175,1	307,6	309,4	370,5	0,19	80,18	82,25	85,18	0,18	81,04	82,93	84,66
262,0	479,0	1,0	1,0	5,2	195,0	76,4	86,0	249,2	175,0	306,8	309,2	370,2	0,19	80,12	82,21	84,87	0,18	80,99	82,89	84,43
263,0	480,0	1,0	1,0	5,2	194,2	76,3	86,1	249,1	174,6	306,2	309,2	370,0	0,19	80,10	82,16	84,57	0,18	80,96	82,85	84,22
264,0	481,0	1,0	1,0	5,1	192,9	76,3	85,9	248,3	174,3	305,4	309,1	369,6	0,19	80,01	82,12	84,29	0,18	80,90	82,81	84,05
265,0	482,0	1,0	0,9	4,7	190,9	76,1	85,8	247,7	174,3	304,8	308,9	369,2	0,19	79,98	82,07	84,05	0,18	80,87	82,76	83,82
266,0	483,0	1,0	0,9	4,3	189,1	76,0	85,8	247,1	174,0	303,8	308,6	368,9	0,19	79,94	82,04	83,78	0,18	80,82	82,70	83,61
267,0	484,0	1,0	0,9	4,2	188,1	76,2	85,7	245,8	173,6	303,2	308,2	368,5	0,19	79,94	81,99	83,54	0,18	80,79	82,66	83,41
268,0	485,0	1,0	0,8	4,2	187,2	76,2	85,5	244,7	173,2	302,3	307,7	368,1	0,19	79,93	81,95	83,33	0,18	80,76	82,63	83,22
269,0	486,0	1,0	0,8	4,2	186,2	76,0	85,5	242,9	172,8	301,5	307,0	367,8	0,19	79,92	81,91	83,11	0,18	80,74	82,59	83,02
270,0	487,0	1,0	0,8	4,1	185,3	76,0	85,3	241,8	172,4	300,6	306,3	367,5	0,19	79,88	81,88	82,89	0,18	80,70	82,57	82,81
271,0	488,0	1,0	0,8	4,1	184,2	76,0	85,3	240,6	171,9	299,6	305,4	367,0	0,19	79,79	81,83	82,68	0,18	80,63	82,53	82,65
272,0	489,0	0,9	0,8	4,1	183,2	76,0	85,2	239,1	171,2	298,8	304,5	366,5	0,19	79,76	81,79	82,51	0,18	80,60	82,51	82,44
273,0	490,0	0,9	0,8	4,1	182,7	75,9	85,0	237,9	170,5	297,7	303,5	366,1	0,19	79,66	81,77	82,31	0,18	80,54	82,46	82,26
274,0	491,0	0,9	0,8	4,1	181,8	75,9	85,0	236,7	170,0	296,5	302,5	365,5	0,19	79,60	81,71	82,17	0,18	80,48	82,41	82,06
275,0	492,0	0,9	0,8	4,1	181,1	75,8	84,9	235,6	169,5	295,5	301,6	365,1	0,19	79,53	81,64	81,97	0,18	80,42	82,40	81,91
276,0	493,0	0,9	0,8	4,1	180,4	75,9	84,8	234,2	169,0	294,4	300,5	364,6	0,19	79,46	81,59	81,83	0,18	80,37	82,33	81,74
277,0	494,0	0,9	0,8	4,1	180,0	76,0	84,8	233,2	168,4	293,1	299,4	364,0	0,19	79,39	81,53	81,65	0,18	80,31	82,31	81,61
278,0	495,0	0,9	0,8	4,1	179,2	75,7	84,7	232,3	167,7	292,0	298,5	363,3	0,19	79,35	81,50	81,56	0,18	80,27	82,29	81,48
279,0	496,0	0,9	0,8	4,1	178,6	75,8	84,5	231,1	167,3	290,8	297,7	362,7	0,19	79,27	81,44	81,38	0,18	80,17	82,24	81,30
280,0	497,0	0,9	0,8	4,1	178,3	75,7	84,4	230,3	167,2	289,7	296,6	361,9	0,19	79,33	81,40	81,23	0,18	80,15	82,16	81,16
281,0	498,0	0,8	0,8	4,1	178,0	75,9	84,3	229,5	166,9	288,7	295,5	361,4	0,19	79,37	81,37	81,09	0,18	80,13	82,14	81,01
282,0	499,0	0,8	0,8	4,1	177,8	76,0	84,4	228,5	167,1	287,3	294,9	360,6	0,19	79,32	81,32	81,88	0,18	80,09	82,10	83,09
283,0	500,0	0,8	0,8	4,1	177,3	75,7	84,2	227,9	166,8	286,5	293,6	359,9	0,19	79,26	81,29	83,40	0,18	80,04	82,07	84,31
284,0	501,0	0,8	0,8	4,1	176,8	75,9	84,3	227,1	166,8	285,5	293,1	359,2	0,19	79,25	81,23	84,94	0,18	80,02	82,02	85,93
285,0	502,0	0,8	0,8	4,1	176,6	75,6	84,0	226,1	166,2	284,5	291,9	358,6	0,19	79,18	81,19	86,19	0,18	79,94	81,99	87,10
286,0	503,0	0,8	0,8	4,1	176,8	75,3	83,9	225,4	165,5	283,6	290,8	358,0	0,19	79,21	81,16	86,00	0,18	79,97	81,94	86,95
287,0	504,0	0,8	0,8	4,1	176,5	75,5	84,0	224,8	164,7	282,5	289,7	357,4	0,19	79,25	81,13	85,68	0,18	79,95	81,91	86,60
288,0	505,0	0,8	0,8	4,1	175,7	75,5	83,9	224,5	164,4	281,7	288,8	356,8	0,19	79,23	81,08	85,27	0,18	79,94	81,87	86,25
289,0	506,0	0,7	0,8	4,1	175,1	75,5	83,9	224,1	163,7	280,7	287,9	356,3	0,19	79,22	81,07	84,96	0,18	79,92	81,84	85,90
290,0	507,0	0,7	0,8	4,1	174,7	75,5	83,8	223,1	163,2	280,0	287,0	355,5	0,19	79,15	81,02	84,60	0,18	79,88	81,79	85,54
291,0	508,0	0,7	0,8	4,1	174,5	75,4	83,6	222,7	163,1	279,2	286,1	355,0	0,19	79,06	80,98	84,31	0,18	79,82	81,78	85,21
292,0	509,0	0,7	0,8	4,1	174,2	75,1	83,6	221,9	162,8	278,2	285,2	354,3	0,19	79,05	80,92	83,96	0,18	79,76	81,72	84,88
293,0	510,0	0,7	0,8	4,1	174,1	75,2	83,5	221,3	162,3	277,6	284,4	353,7	0,19	78,99	80,87	83,65	0,18	79,73	81,68	84,54
294,0	511,0	0,7	0,8	4,1	173,5	75,3	83,5	221,1	162,0	276,8	283,6	353,1	0,19	78,91	80,83	83,36	0,18	79,66	81,63	84,25
295,0	512,0	0,7	0,8	4,2	173,7	75,5	83,4	220,6	161,9	276,2	283,0	352,5	0,19	78,83	80,80	83,09	0,18	79,65	81,60	83,96
296,0	513,0	0,7	0,8	4,2	173,3	75,5	83,4	220,4	161,6	275,2	282,3	351,9	0,19	78,76	80,75	82,84	0,18	79,59	81,56	83,66
297,0	514,0	0,7	0,8	4,3	173,2	75,4	83,2	220,1	161,7	274,6	281,7	351,1	0,19	78,73	80,70	82,57	0,18	79,56	81,53	83,37
298,0	515,0	0,7	0,8	4,3	173,2	75,1	83,3	219,8	161,4	274,1	281,0	350,4	0,19	78,73	80,65	82,34	0,18	79,53	81,47	83,11
299,0	516,0	0,6	0,8	4,2	173,2	75,1	83,2	219,3	161,3	273,4	280,4	350,0	0,19	78,78	80,64	82,13	0,18	79,52	81,45	82,86
300,0	517,0	0,6	0,8	4,2	172,6	75,0	83,1	219,0	161,1	272,8	279,8	349,5	0,19	78,70	80,58	81,87	0,18	79,45	81,39	82,59
301,0	518,0	0,6	0,7	4,2	172,1	74,8	83,0	218,5	160,8	272,3	279,2	348,9	0,19	78,68	80,54	81,65	0,18	79,41	81,36	82,35
302,0	519,0	0,6	0,7	4,1	172,0	75,1	83,1	217,8	160,5	271,7	278,7	348,3	0,19	78,60	80,49	81,45	0,18	79,36	81,32	82,14
303,0	520,0	0,6	0,7	4,1	171,8	74,8	83,0	217,8	160,3	271,1	278,2	347,7	0,19	78,51	80,46	81,24	0,18	79,30	81,27	81,88
304,0	521,0	0,6	0,7	4,1	171,3	74,8	82,9	216,9	160,1	270,4	277,6	347,2	0,19	78,49	80,42	81,06	0,18	79,29	81,25	81,68
305,0	522,0	0,6	0,7	4,1	171,3	75,1	82,8	216,5	159,9	269,9	277,0	346,6	0,19	78,46	80,39	80,88	0,18	79,26	81,23	81,46
306,0	523,0	0,6	0,7	4,1	171,2	75,0	82,9	216,1	159,7	269,3	276,6	346,2	0,19	78,39	80,32	80,69	0,18	79,19	81,16	81,27
307,0	524,0	0,6	0,7	4,1	170,5	74,9	82,8	215,7	159,6	268,6	276,2	345,6	0,19	78,38	80,31	80,53	0,18	79,14	81,13	81,07
308,0	525,0	0,6	0,7	4,1	169,9	75,0	82,8	215,2	159,2	268,3	275,6	345,2	0,19	78,36	80,23	80,39	0,18	79,09	81,09	80,89
309,0	526,0	0,6	0,7	4,1	169,6	74,9	82,8	214,5	159,0	267,6	274,9	344,7	0,19	78,23	80,18	80,26	0,18	79,02	81,03	80,70
310,0	527,0	0,5	0,7	4,0	168,8	74,7	82,7	214,3	158,8	267,1	274,5	344,2	0,19	78,24	80,15	80,12	0,18	79,01	80,99	80,56
311,0	528,0	0,5	0,7	4,0	168,4	74,7	82,5	213,4	158,7	266,4	274,0	343,7	0,19	78,16	80,10	80,96	0,18	78,97	80,97	80,37
312,0	529,0	0,5	0,7	4,0	168,6	74,9	82,4	213,1	158,6	265,8	273,4	343,2	0,19	78,15	80,07	80,84	0,18	78,94	80,94	80,21
313,0	530,0	0,5	0,7	4,0	168,3	74,9	82,4	212,3	158,4	265,2	273,1	342,8	0,19	78,09	80,03	80,72	0,18	78,89	80,89	80,06
314,0	531,0	0,5	0,7	4,0	168,1	74,8	82,3	211,7	158,2	264,5	272,5	342,4	0,19	78,07	79,97	80,59	0,18	78,86	80,84	80,90
315,0	532,0	0,5	0,7	4,0	168,1	74,9	82,2	211,2	158,0	263,7	272,0	341,8	0,19	78,02	79,93	80,47	0,18	78,81	80,82	80,73
316,0	533,0	0,5	0,7	4,0	168,5	74,6	82,3	210,8	157,9	263,1	271,7	341,5	0,19	78,01	79,89	80,36	0,18	78,78	80,77	80,58
317,0	534,0	0,5	0,8	4,1	167,7	74,6	82,2	210,4	157,6	262,3	271,3	341,1	0,19	77,98	79,86	80,25	0,18	78,74	80,75	80,48
318,0	535,0	0,5	0,8	3,9	167,6	74,4	82,2	209,6	157,4	261,5	270,9	340,6	0,19	77,95	79,81	80,15	0,18	78,70	80,70	80,33
319,0	536,0	0,4	0,8	3,9	167,8	74,6	82,2	209,5	157,4	260,5	270,6	340,2	0,19	77,94	79,78	80,08	0,18	78,68	80,67	80,21
320,0	537,0	0,4	0,8	3,8	166,9	74,4	82,1	208,7	156,9	259,8	270,1	339,7	0,19	77,89	79,76	80,99	0,18	78,65	80,64	81,07
321,0	538,0	0,4	0,8	3,8	166,6	74,3	82,0	208,2	156,8	258,9	269,5	339,3	0,19	77,83	79,70	80,87	0,18	78,58	80,60	80,97
322,0	539,0	0,4	0,7	3,7	166,3	74,3	81,9	207,8	156,8	258,0	269,1	338,8	0,19	77,80	79,66	80,78	0,18	78,54	80,57	80,86
323,0	540,0	0,4	0,7	3,8	166,1	74,3	81,9	207,2	156,8	257,0	268,6	338,4	0,19	77,76	79,62	80,68	0,18	78,49	80,53	80,75
324,0	541,0	0,4	0,7	3,7	165,9	74,4	81,7	207,1	159,8	256,1	268,4	337,8	0,19	77,66	79,57	80,37	0,18	78,43	80,47	80,27
325,0	542,0	0,4	0,7	3,7	165,1	74,7	81,7	206,7	159,3	254,9	268,0	337,3	0,19	77,60	79,52	82,24	0,18	78,35	80,44	82,34
326,0	543,0	0,4	0,7	3,7	165,2	74,7	81,5	206,2	158,6	254,2	267,4	336,8	0,19	77,57	79,47	83,17	0,18	78,29	80,40	83,46
327,0	544,0	0,4	0,7	3,7	164,8	74,5	81,7	205,7	158,0	253,4	266,6	336,4	0,19	77,56	79,45	83,06	0,18	78,26	80,35	83,39
328,0	545,0	0,4	0,7	3,7	164,7	74,2	81,4	205,0	157,5	252,7	265,9	336,0	0,19	77,57	79,41	82,78	0,18	78,23	80,27	83,16
329,0	546,0	0,4	0,7	3,7	164,7	74,3	81,5	204,6	157,2	251,9	265,3	335,6	0,19	77,61	79,37	82,48	0,18	78,24	80,25	82,89
330,0	547,0	0,4	0,7	3,7	164,3	74,2	81,6	204,1	156,8	251,0	264,7	335,1	0,19	77,59	79,34	82,20	0,18	78,20	80,21	82,65
331,0	548,0	0,3	0,7	3,7	163,9	74,2	81,4	203,7	156,6	250,1	264,0	334,6	0,19	77,55	79,28	81,92	0,18	78,16	80,15	82,42
332,0	549,0	0,3	0,7	3,7	163,6	74,3	81,5	203,3	156,2	249,4	263,5	334,0	0,19	77,53	79,26	81,70	0,18	78,14	80,14	82,21
333,0	550,0	0,3	0,7	3,7	163,4	74,3	81,5	202,9	156,1	248,8	262,9	333,5	0,19	77,50	79,22	81,45	0,18	78,09	80,11	81,94
334,0	551,0	0,3	0,7	3,7	162,8	74,1	81,5	202,5	155,9	248,0	262,4	333,0	0,19	77,46	79,17	81,23	0,18	78,05	80,06	81,70
335,0	552,0	0,3	0,7	3,7	162,9	74,2	81,3	201,8	155,8	247,3	261,8	332,4	0,19	77,41	79,16	80,99	0,18	78,03	80,03	81,48
336,0	553,0	0,3	0,7	3,7	162,5	74,3	81,2	201,5	156,1	246,4	261,4	331,8	0,19	77,42	79,11	81,20	0,18	78,01	80,01	81,36
337,0	554,0	0,3	0,7	3,7	162,2	74,4	81,3	201,1	156,5	245,6	261,1	331,0	0,19	77,37	79,10	85,51	0,18	77,96	79,94	82,69
338,0	555,0	0,3	0,7	3,7	162,1	74,2	81,2	200,9	156,8	244,7	260,6	330,4	0,19	77,37	79,05	86,91	0,18	77,99	79,93	85,16
339,0	556,0	0,3	0,7	3,7	161,7	74,4	81,1	200,5	156,4	244,2	259,8	329,8	0,19	77,31	79,04	86,62	0,18	77,92	79,89	87,26

340,0	557,0	0,2	0,7	3,7	161,5	74,1	81,2	200,1	156,2	243,7	259,2	329,3	0,19	77,32	78,98	86,11	0,18	77,91	79,84	87,18
341,0	558,0	0,2	0,7	3,6	161,0	74,1	81,1	199,6	155,8	242,8	258,6	328,7	0,19	77,29	78,95	85,55	0,18	77,87	79,81	86,81
342,0	559,0	0,2	0,7	3,4	160,4	74,0	81,0	199,2	155,5	242,3	258,0	328,3	0,19	77,27	78,93	85,04	0,18	77,84	79,78	86,41
343,0	560,0	0,2	0,8	3,4	159,9	74,0	81,0	198,9	155,2	241,4	257,5	327,7	0,19	77,24	78,89	84,54	0,18	77,82	79,74	86,04
344,0	561,0	0,2	0,8	3,3	159,2	73,9	81,0	198,2	154,8	240,8	256,8	327,2	0,19	77,21	78,86	84,11	0,18	77,79	79,72	85,65
345,0	562,0	0,2	0,8	3,3	158,7	73,9	80,9	197,6	154,8	240,1	256,2	326,6	0,19	77,18	78,83	83,64	0,18	77,76	79,67	85,30
346,0	563,0	0,2	0,8	3,3	158,3	73,9	80,8	196,9	154,6	239,2	255,6	326,0	0,19	77,11	78,77	83,24	0,18	77,73	79,64	84,92
347,0	564,0	0,2	0,8	3,2	158,0	73,9	80,8	196,3	154,3	238,6	255,0	325,4	0,19	77,10	78,74	82,91	0,18	77,71	79,61	84,60
348,0	565,0	0,2	0,8	3,3	157,3	74,0	80,8	195,9	153,9	237,7	254,4	324,8	0,19	77,02	78,71	82,54	0,18	77,66	79,59	84,24
349,0	566,0	0,2	0,7	3,2	156,8	73,9	80,7	195,3	153,5	236,8	253,7	324,3	0,19	76,99	78,67	82,22	0,18	77,62	79,55	83,89
350,0	567,0	0,2	0,7	3,2	156,3	73,8	80,6	194,7	153,3	235,9	253,1	323,7	0,19	76,96	78,63	81,91	0,18	77,58	79,50	83,54
351,0	568,0	0,2	0,7	3,2	155,9	73,9	80,5	194,5	153,3	235,3	252,4	323,1	0,19	76,93	78,58	81,60	0,18	77,55	79,48	83,22
352,0	569,0	0,1	0,8	3,2	155,4	73,9	80,5	193,9	153,0	234,3	251,7	322,5	0,19	76,93	78,56	81,31	0,18	77,53	79,44	82,94
353,0	570,0	0,1	0,8	3,3	155,1	73,7	80,4	193,5	152,8	233,5	251,0	321,9	0,19	76,89	78,51	81,03	0,18	77,49	79,41	82,61
354,0	571,0	0,1	0,8	3,2	154,7	73,6	80,3	193,1	152,5	232,7	250,3	321,3	0,19	76,88	78,48	80,73	0,18	77,45	79,37	82,31
355,0	572,0	0,1	0,7	3,2	154,2	73,7	80,2	192,8	152,2	231,8	249,6	320,7	0,19	76,83	78,45	80,53	0,18	77,43	79,35	82,01
356,0	573,0	0,1	0,7	3,2	154,0	73,7	80,2	192,1	151,8	231,0	248,9	320,1	0,19	76,84	78,41	80,26	0,18	77,39	79,30	81,76
357,0	574,0	0,1	0,7	3,2	153,4	73,7	80,2	191,7	151,6	230,3	248,2	319,5	0,19	76,79	78,40	80,02	0,18	77,34	79,24	81,47
358,0	575,0	0,1	0,7	3,2	153,2	73,8	80,1	191,3	151,4	229,7	247,5	319,0	0,19	76,78	78,38	80,02	0,18	77,32	79,23	81,20
359,0	576,0	0,1	0,7	3,2	152,5	73,9	80,6	190,6	151,4	228,8	246,6	318,3	0,19	76,78	78,35	80,13	0,18	77,32	79,20	80,99
360,0	577,0	0,1	0,7	3,1	151,9	74,2	82,5	190,4	151,6	228,1	246,0	317,7	0,19	76,86	78,33	80,61	0,18	77,33	79,15	81,69
361,0	578,0	0,1	0,7	3,1	151,0	74,5	84,7	189,8	151,6	227,4	245,2	317,0	0,19	77,04	78,34	81,93	0,18	77,42	79,14	81,99
362,0	579,0	0,1	0,7	3,1	150,4	74,9	86,6	189,2	151,3	226,6	244,4	316,6	0,19	77,36	78,38	81,95	0,18	77,64	79,18	81,84
363,0	580,0	0,0	0,6	3,1	149,5	74,8	88,2	188,5	150,9	225,9	243,6	316,0	0,19	77,62	78,42	81,79	0,18	77,81	79,20	81,68

Manufacturer: WOLFSTEEL
Model: 2100

Run: 1
Project #: PI 20184
Test Duration: 363 min

	HHV	LHV
Eff	68,87%	74,10%
Comb Eff	99,50%	99,50%
HT Eff	69,21%	74,47%
Output	31 670	kJ/h
Burn Rate	2,28	kg/h
Grams CO	26	g
Input	45 988	kJ/h
MC wet	18,78	

Note: In the “Input data”, "Calc. % O_2", "Fuel Properties", and “Mass Balance” columns, [e], [d], [g], [a]. [b], [c], [h], [u], [w], [j], and [k] refer to their respective variables in Clauses 13.7.3

Ultimate CO_2
$CO_{2\text{-ult}}$ 19,86
F_0
1,050

Heat Output:	30 042	Btu/h	31 670	kJ/h
Heat Input:	43 624	Btu/h	45 988	kJ/h
Burn Duration:	1,22	h		
Burn Rate:	5,02	lb/h	2,276	kg/h
Stack Temp:	634,0	Deg. F	334,5	Deg. C

Overall Heating Efficiency:	68,87%
Combustion Efficiency:	99,50%
Heat Transfer Efficiency:	69,21%

Air Fuel Ratio (A/F)	
Dry Molecular Weight (M_d)	30,01
Dry Moles Exhaust Gas (N_r):	371,68
Air Fuel Ratio (A/F)	10,64

Manufacturer: WOLFSTEEL
Model: 2100

Run: 1
Project #: PI 20184
Test Duration: 363 min

	HHV	LHV
Eff	72,60%	78,12%
Comb Eff	95,98%	95,98%
HT Eff	75,64%	81,39%
Output	15 372	kJ/h
Burn Rate	1,05	kg/h
Grams CO	381	g
Input	21 173	kJ/h
MC wet	18,85	

Note: In the “Input data”, "Calc. % O_2", "Fuel Properties", and “Mass Balance” columns, [e], [d], [g], [a]. [b], [c], [h], [u], [w], [j], and [k] refer to their respective variables in Clauses 13.7.3

Ultimate CO_2
$CO_{2\text{-ult}}$ 19,86
F_0
1,049

Overall Heating Efficiency:	72,60%	Air Fuel Ratio (A/F)		
Combustion Efficiency:	95,98%	Dry Molecular Weight (M_d)	29,61	
Heat Transfer Efficiency:	75,64%	Dry Moles Exhaust Gas (N_r):	486,86	
		Air Fuel Ratio (A/F)	13,91	

Heat Output:	14 582	Btu/h	15 372	kJ/h
Heat Input:	20 085	Btu/h	21 173	kJ/h
Burn Duration:	6,05	h		
Burn Rate:	2,31	lb/h	1,048	kg/h
Stack Temp:	268,6	Deg. F	131,4	Deg. C

POLYTESTS
TESTING THROUGH YOUR REALITY

mech 5/32

Date: 2019-01-29 Manufacturer: Wolf Steel Model: 2100

Project #: PJ 20184 Run: 2 Tech: MM Reviewer: SP

- kindling GOLBS START FIRE
- torche 1 min
- close DOOR immediatly
- Fan ON High (thermodisque)
- At 20LBS insert load
close DOOR immediatly
- At 35LBS prie Buck arriere mis on avant
At 14 min close air inlet gradually
At 15 min close air inlet completely mech 5/32

TEST LOAD CONFIGURATION

POLYTESTS
TESTING THROUGH YOUR REALITY

PRE / POST CHECKS

Date: 2019-01-29 Manufacturer: Wolf Steel Model: 2100

Project #: pT 20184 Run: 2 Tech: M M Reviewer: [illegible]

Moisture Meter Calibration Check:

Equipment #	Time	12%	22%
EM-191	7:00	ok	ok

Pre-Test Post-Test

Facility Conditions:

	Pre-Test	Post-Test
Air Velocity from less than 2 feet	0 (max50 Fpm)	0 (max50 Fpm)
Smoke Capture Check	ok	ok
Picture (4 sides)	ok	ok

Wood Heater Conditions:

Date Wood Heater Stack Cleaned	2019-01-28
Date Dilution Tunnel Cleaned	2019-01-28
Induced Draft Check (max 0.005 H2O)	ok
Traverse before ignition	ok

Temperature System:

Ambient (65°-90°F)	ok °F

Proportional Checks:

Thermocouple check	ok
Pitot Clean	ok
Pitot verification	ok

Sampling Train ID Numbers:

	High fire test			Medium low fire test		
	1st hour	Train 1	Train 2	1st hour	Train 1	Train 2
Probe				006	37	38
Filter Front				304	306	309
Filter Back				305	308	310
Filter Thermocouple		NA		11	11	12
Filter (80°F ≥ <90°F)				ok	ok	ok

POLYTESTS
TESTING THROUGH YOUR REALITY

SAMPLING EQUIPMENT CHECK OUT

Date: 2019-01-29 Manufacturer: Wolf Steel Model: 2100

Project #: pI 20184 Run: 2 Tech: MR Reviewer: DP

Leakage Checks Tunnel Samplers

High fire test	System 1st hour		System 1		System 2	
Unplugged Flow Rate = .25cfm	Pre-Test ASTM (-15) CSA B415 (-5)	Post-Test (max test)	Pre-Test ASTM (-15) CSA B415 (-5)	Post-Test (Max test)	Pre-Test ASTM (-15) CSA B415 (-5)	Post-Test (Max test)
Vacuum (inches Hg.)						
Final 1minute DGM (Liter)	856946,81		856946,90		807352,80	
Initial 1minute DGM (Liter)	856946,78		856946,88		807352,80	
Change © (Liter)						
Allowable leakage .04 x Sample rate or 0.28Lpm CSA B415 (0.56)						
Check OK						

Low medium fire test	System 1st hour		System 1		System 2	
Unplugged Flow Rate = .25cfm	Pre-Test ASTM (-15) CSA B415 (-5)	Post-Test (max test)	Pre-Test ASTM (-15) CSA B415 (-5)	Post-Test (Max test)	Pre-Test ASTM (-15) CSA B415 (-5)	Post-Test (Max test)
Vacuum (inches Hg.)	-15	-15	-15	-15	-15	-15
Final 1minute DGM (Liter)	856946,81	858808,43	856946,90	858808,56	807352,80	809148,97
Initial 1minute DGM (Liter)	856946,78	858808,46	856946,88	858808,55	807352,80	809148,96
Change © (Liter)	0,03	0,01	0,02	0,01	∅	0,01
Allowable leakage .04 x Sample rate or 0.28Lpm CSA B415 (0.56)						
Check OK	ok	ok	ok	ok	ok	ok

POLYTESTS
TESTING THROUGH YOUR REALITY

SAMPLING EQUIPMENT CHECK OUT

Date: 2019-01-29 Manufacturer: Wolf Steel Model: 2100

Project #: PI 20184 Run: 2 Tech: MM Reviewer: BD

Leakage Checks Flue Gas Sampler

Plugged Probe	Pre-Test	Post Test
Vacuum (inches Hg.)	-5	-5
Rotameter Reading (mml/min.)	0	0
Flow Rate (lpm)	1.5	1.5
Allowable (.02 x Sample Rate)	30	30
Check OK	ok	ok

Leakage Checks Pitot

Plugged Probe	Pre Test 3 H2o static	Pre Test 0.4-0.5 H2o velocity	Post Test 3 H2o Static	Post Test 0.4-0.5 H2o velocity
Vacuum (inches Hg.)	3	.4	3	.5
Check OK (no change after 15 sec.)	ok	ok	ok	ok

POLYTESTS
TESTING THROUGH YOUR REALITY

PRE-TEST SCALE AUDIT

Date: 2019-01-29 Manufacturer: Wolf Steel Model: 2100

Project #: PT 20184 Run: 2 Tech: MM Reviewer: SP

Scale Type	Audit		Measured Weight
	Equipment #	Weight	
Platform	EM-090	44 lbs, Class F	44 lbs
Wood	EM-090	44 lbs, Class F	44 lbs
Analytical	EM-128	100 mg, Class S	100 mg
Analytical	EM-124	200 g, Class S	200 g

LIMITS OF WEIGHT RANGES

ANALYTICAL SCALE: ..... 50%-150% of dry filter weight, ± 0.1 mg
PLATFORM SCALE.....20%-80% of ideal test load weight, ± 0.1 lbs or 1%
WOOD SCALE .....20%-80% of ideal test load weight, ± 0.01 lbs or 1%

Date: 2019. 01. 29 Manufacturer: Wolf Steel Model: 2100

Project #: pT 20184 Run: 2 Tech: MM Reviewer: JP

FOR TUNNELS < 12 in

Barometric pressure (P_{bar}) 100.6 (KPa.) Static pressure (P_q) 0.35 (inches w.c.)
Inside diameter: Port A _____ Port B ____.
Tunnel cross sectional area: .1963Ft^2
Pitot tube type: Standard

Traverse Point	Position (inches)			Velocity Head Δ_p (inches H_2O)	Tunnel Temperature (°F)
	6 po	7 po	8 po		
A- Centroid	3.00	3.50	4	0062	80.88
B - Centroid	3.00	3.50	4	0063	81.00
A-1	0.40	0.50	0.50	0050	81.76
A-2	1.50	1.75	2	0059	82.44
A-3	4.50	5.25	6	0049	82.00
A-4	5.60	6.5	7.5	0049	81.43
B-1	0.40	0.50	0.50	0050	81.33
B-2	1.50	1.75	2	0067	80.73
B-3	4.50	5.25	6	0056	80.31
B-4	5.60	6.5	7.5	0050	80.11
				AVERAGE	

$$v_s = K_p C_p (\sqrt{\Delta p})_{avg} \sqrt{\frac{(T_s)_{avg}}{P_s M_s}}$$

Where,
C_p = pitot tube coefficient, dimension less = 0.99 for standard pitot.
Δ_p = manometer reading (inches H_2O)
T_s = average absolute dilution tunnel temperature (°F + 460)
P_s = absolute dilution tunnel gas pressure or $P_{bar} + P_{qg}$
P_q = static pressure $\underline{\text{in. } H_2O}$ { 13.6 }
M_s = 28.56, wet molecular weight of stack gas (alternatively, it may be measured)
K_p = 85.49 pitot tube constant, (conversion factor for English units)

$\Delta_p$avg. = average of the square roots of the velocity heads (Δ_p) measured at each traverse point.

POLYTESTS
TESTING THROUGH YOUR REALITY

CONTINUOUS ANALYZERS

Date: 2019-01-29 Manufacturer: Wolf Steel Model: 200

Project #: PT 20184 Run: 2 Tech: MR Reviewer: DP

Pre-Test (Adjust and Record)

	ZERO		SPAN		CAL. (Record Only)	
CO	0	0	2.991	3.000	0.994	1.000
Tolerance CO		+/- 0.02		+/- 0.15		+/- 0.05
CO_2	0	0	17.82	18.00	9.72	10.00
Tolerance CO2		+/- 0.02		+/- 0.5		+/- 0.5
O_2 informative CSA B415 calculated value	na	na	na	na	na	na
	Actual	Should Be	Actual	Should Be	Actual	Should Be

Post Test (Record Only)

	Zero	Span	Cal.	Zero Drift	Limit	Span Drift	Limit	Cal. Drift	Limit	OK?	Not OK*
CO	0	2.995	0.988	0	0.02	0.004	0.15	0.006	0.05	✓	
CO_2	0	17.80	9.70	0	0.02	0.02	0.5	0.02	0.5	✓	

POLYTESTS
TESTING THROUGH YOUR REALITY

TEST DATA LOG

Date: 20/9. 01. 29 Manufacturer: Wolf Steel Model: 2100

Project #: pI 20184 Run: 2 Tech: _____ Reviewer: DP

RAW DRY GAS METER READINGS

		System 1	System 2	Blank
High fire test	Final (Liter)			N.D
	Initial (Liter)			
Low medium fire test	Final (Liter)	858 807.52	809 148.68	~~801.00~~
	Initial (Liter)	856 947.51	807 353.44	725.84

AMBIENT CONDITIONS

	Before	After
Barometer (kPa):	101.6	101.2
Dry Bulb (F):	76.24	79.52
Humidity (%):	16.2	15.1

POLYTESTS
TESTING THROUGH YOUR REALITY

FUEL DATA

Date: 2019-02-29 Manufacturer: Wolf Steel Model: 2100

Project #: PT 20184 Run: 2 Tech: MM Reviewer: DP

FUEL DESCRIPTION:

Type of wood:

KINDLING AND START-UP LOAD

Piece Size	Weight		Meter Moisture Content (% dry)			
x x 11 in.	1.9	lbs.	9	9		9
x x ~~11~~ in.	42	lbs.	20	20		20
x x in.		lbs.				
x x in.		lbs.				
x x in.		lbs.				
x x in.		lbs.				
x x in.		lbs.				
x x in.		lbs.				
x x in.		lbs.				

HIGHFIRE TEST LOAD

Piece Size	Weight		Meter Moisture Content (% dry)			
3.00 x 2.75 x 19 in.	3092	lbs.	261	243		191
2.25 x 2.50 x 19 in.	2264	lbs.	267	210		193
2.5 x 2.75 x 19 in.	3096	lbs.	272	201		193
4.00 x 4.00 x 19 in.	570	lbs.	269	231		2.4
x x in.		lbs.				
x x in.		lbs.				
x x in.		lbs.				
x x in.		lbs.				
x x in.		lbs.				

POLYTESTS
TESTING THROUGH YOUR REALITY

FUEL DATA

Date: 2019-01-29 Manufacturer: Wolf Steel Model: 2166

Project #: PT 2184 Run: 2 Tech: MM Reviewer: ND

FUEL DESCRIPTION:

Type of wood:

LOW OR MEDIUM TEST LOAD

Piece Size	Weight		Meter Moisture Content (% dry)				
300 x 350 x 16 in.	3024	lbs.	275		21		193
325 x 325 x 16 in.	3163	lbs.	234		268		251
300 x 325 x 16 in.	3824	lbs.	233		201		191
x x in.		lbs.					
225 x 250 x 16 in.	2028	lbs.	221		210		191
375 x 375 x 16 in.	4352	lbs.	278		269		211
x x in.		lbs.					
x x in.		lbs.					
x x in.		lbs.					
x x in.		lbs.					
x x in.		lbs.					
x x in.		lbs.					
x x in.		lbs.					
x x in.		lbs.					

POLYTESTS
TESTING THROUGH YOUR REALITY

DILUTION TUNNEL PARTICULATE SAMPLER DATA

Date:_____ Manufacturer:_____ Model:_____

Project #: _____ Run:_____ Tech:_____ Reviewer:_____

		HIGHFIRE TEST FILTERS								
		SYSTEM 1 – 1st hour				SYSTEM 1				
Pre-test Weight Record		Probe & Housing Number	Front Filter Number	Back Filter Number	gaskets	Probe & Housing Number	Front Filter Number	Back Filter Number	gaskets	Blanck
Date	Time									

		SYSTEM 1 – 1st hour				SYSTEM 1				
Post-test Weight Record		Probe & Housing Number	Front Filter Number	Back Filter Number	gaskets	Probe & Housing Number	Front Filter Number	Back Filter Number	gaskets	Blanck
Date	Time									

POLYTESTS
TESTING THROUGH YOUR REALITY

DILUTION TUNNEL PARTICULATE SAMPLER DATA

Date:_____ Manufacturer:_____ Model:_____

Project #: _____ Run:_____ Tech:_____ Reviewer:_____

		HIGH FIRE TEST FILTERS			
		SYSTEM 2			
Pre-test Weight Record		Probe & Housing Number	Front Filter Number	Back Filter Number	gaskets
Date	Time				

		SYSTEM 2			
Post-test Weight Record		Probe & Housing Number	Front Filter Number	Back Filter Number	gaskets
Date	Time				

POLYTESTS
TESTING THROUGH YOUR REALITY

DILUTION TUNNEL PARTICULATE SAMPLER DATA

Date: 2019-01-28 Manufacturer: Wolf Steel Model: 2100

Project #: PI 20184 Run: 2 Tech: MM Reviewer: NP

		LOW OR MEDIUM TEST FILTERS								
		SYSTEM 1 – 1st hour				SYSTEM 1				
Pre-test Weight Record		Probe & Housing Number	Front Filter Number	Back Filter Number	gaskets	Probe & Housing Number	Front Filter Number	Back Filter Number	gaskets	Blanck
Date	Time	006	304	305	2	37	306	308	26	~~310~~ 311
2019-01-28	17:00	61,3752		0,1673	34,6751	107,9734		0,1660	35,5456	0,1270
2019-01-29	8:00	61,3753		0,1674	34,6752	107,9735		0,1659	35,5456	0,1271

		SYSTEM 1 – 1st hour				SYSTEM 1				
Post-test Weight Record		Probe & Housing Number	Front Filter Number	Back Filter Number	gaskets	Probe & Housing Number	Front Filter Number	Back Filter Number	gaskets	Blanck
Date	Time	006	304	305	2	37	306	308	26	311
2019-01-29	17:00	61,3760		0,1695	34,6786	107,9740		0,1702	35,5472	0,1274
2019-02-07	8:00	61,3757		0,1685	34,6781	107,9739		0,1682	35,5468	0,1272
2019-02-08	10:00	61,3757		0,1685	34,6781	107,9739		0,1681	35,5468	0,1272

POLYTESTS
TESTING THROUGH YOUR REALITY

DILUTION TUNNEL PARTICULATE SAMPLER DATA

Date: 2019-01-28 Manufacturer: Wolf Steel Model: 2100

Project #: PI 20184 Run: 2 Tech: M M Reviewer:

		LOW OR MEDIUM FIRE TEST FILTERS			
		SYSTEM 2			
Pre-test Weight Record		Probe & Housing Number	Front Filter Number	Back Filter Number	gaskets
Date	Time	38	309	310	
2019-01-28	17:00	110 4340		01682	336822
2019-01-29	8:00	110 4339		01683	33 6823

		SYSTEM 2			
Post-test Weight Record		Probe & Housing Number	Front Filter Number	Back Filter Number	gaskets
Date	Time	38	309	310	28
2019-02-29	17:00	110 4345		01727	33 6869
2019-02-07	8:00	110 4344		01713	33 6862
2019-02-08	10:00	110 4344		01712	33 6862

Paramètres

Tous les facteurs de corrections et autres paramètres qui peuvent être modifiés par l'utilisateur du fichier sont regroupés ici.

Code verrouillage:	WOL

Description du test

Test standard	EPA	
Run #	2	
Date	29-01-2019	
Technicien	M.M	
Project #	PI 20184	

Description de l'unité

Manufacturier	WOLFSTEEL	
Modèle	2100	
Combustion system	Non-Cat	
Appliance type	WOOD STOVE	
Firebox volume	1,45	cu ft.
Appliance weight empty	n.a	lbs
Fan (no, Standard, Option)	OPTON	

Paramètres du test

Logging time	1	min
Manufacturer's rated heat output	n.a	BTU/h Donnée fournie par le manfacturier
Targeted category	1	
Targeted output	n.a	BTU/h
Cp steel	n.a	BTU/lb-°F

Échantillonnage

Blank sampling rate	0,20	cuft/min
Internal probe diameter	0,18	in.
Calibration Factor (DGM #1):	1,010	Dimensionless
Equipment number (DGM #1):	EM 178	
Calibration Factor (DGM #2):	0,987	Dimensionless
Equipment number (DGM #2):	EM 179	
Calibration Factor (DGM #3):	0,996	
Equipment number (DGM #3):	EM 070	Dimensionless

Tunnel

Targeted tunnel flow rate	140	scfm
Tunnel diameter	6	in.
Molecular weight	28,78	May be assumed to be 28,78 (EPA) Si B-415 = 29
Pitot tube type	Standard	
Pitot tube coefficient	0,99	Dimensionless

Project nu.	PI 20184
Date	29-01-2019
Technicien	m.m

Fuel data

Fuel type	Cord	
Fuel specie	Oak	
HHV	20207,0	kJ/kg
%C	49,5	
%H	6,6	
%O	43,7	
%Ash	0,2	
HHV	8689,9	Btu/lb
LHV	7600,4	Btu/lb

Default Fuel Values

	D. Fir	Oak/Maple
HHV	19 810	20 207
%C	48,73	49,5
%H	6,87	6,62
%O	43,9	43,7
%Ash	0,5	0,2
HHV (Btu/lb)	8519	8690
LHV (Btu/lb)	7451	7600

Adjunct to ASTM E XXXX Wood Heater Cordwood Test Method - May 10, 2017 Version

Cordwood Fuel Load Calculators - 10 lb/ft^3 Nominal Load Density

Core 45-65% of Total Load Weight, Remainder 35-55% of Total Load Weight

Values to be input manually

For All Usable Firebox Volumes - High Fire Test Only

Nominal Required Load Density (wet basis)	10	lb/ft^3				
Usable Firebox Volume	1,45	ft^3				
Total Nom. Load Wt. Target	14,50	lb				
Total Load Wt. Allowable Range	13,80	to	15,20	lb		
Core Target Wt. Allowable Range	6,50	to	9,40	lb		
Remainder Load Wt. Allowable Range	5,10	to	8,00	lb		
						Mid-Point
Core Load Pc. Wt. Allowable Range	2,20	to	3,60	lb		2,90
Remainder Load Pc. Wt. Allowable Range	1,50	to	8,00	lb		4,75
	Pc. #					
Core Load Piece Wt. Actual	1	3,09	lb	In Range		
	2	2,26	lb	In Range		
	3	3,10	lb	In Range		
Core Load Total. Wt. Actual		8,45	lb	In Range		
	Pc. #					
Remainder Load Piece Wt.	1	5,70	lb	In Range		
(1 to 3 Pcs.)	2		lb	NA		
	3		lb	NA		
Remainder Load Tot. Wt. Act		5,70	lb	In Range		
Total Load Wt. Actual		14,15	lb	In Range		
Core % of Total Wt.		60%		In Range	45-65%	
Remainder % of Total Wt.		40%		In Range	35-55%	
Actual Load % of Nominal Target		98%		In Range	95-105%	
Actual Fuel Load Density		9,8	lb/ft^3			
Kindling and Start-up Fuel						
Maximim Kindling Wt. (20% of Tot. Load Wt.)		2,83	lb			
Actual Kindling Wt.		1,90	lb	In Range	13,4%	
Maximum Start-up Fuel Wt. (30% of Tot. Load Wt.)		4,25	lb			
Actual Start-up Fuel Wt.		4,20	lb	In Range	29,7%	
Allowable Residual Start-up Fuel Wt. Range	1,4	to	2,8	lb		Mid-Point
Actual Residual Start-up Fuel Wt.		2,2	lb	In Range		2,1
Total Wt. All Fuel Added (wet basis)		20,25	lb			
High Fire Test Run End Point Range	Low		High			Mid-Point
Based on Fuel Load Wt. (w/tares)	1,3	to	1,6	lb		1,4
Actual Fuel Load Ending Wt.		1,4	lb	In Range		

Load pieces Length in. 19 in.

Fuel Piece Moisture Reading (%-dry basis)

1	2	3	Ave.		Pc. Wt. Dry Basis	
26,1	24,3	19,1	23,2	In Range	2,51 lb	1,14 kg
26,7	21	19,3	22,3	In Range	1,85 lb	0,84 kg
27,2	20,1	19,3	22,2	In Range	2,53 lb	1,15 kg
26,9	23,1	21,4	23,8	In Range	4,60 lb	2,09 kg
			NA	NA	NA lb	NA kg
			NA	NA	NA lb	NA kg

Total Load Ave. MC (%-dry basis)	23,1	In Range	
Total Load Ave. MC % (wet basis)	18,7		
Total Test Load Weight (dry basis)			11,50 lb / 5,22 kg

Kindling Moisture (%-dry basis)

9	9	9	9,0	In Range	1,74 lb / 0,79 kg

Start-up Fuel Moisture Readings (%-dry basis)

20	20	20	20,0	In Range	3,50 lb / 1,59 kg

Total Wt. All Fuel Added (dry basis)	16,74 lb / 7,59 kg
Total Wt. All Fuel Burned (dry basis)	13,1 lb / 6,0 kg

Adjunct to ASTM E XXXX Wood Heater Cordwood Test Method - May 10, 2017 Version

Cordwood Fuel Load Calculators - 12 lb/ft^3 Nominal Load Density

Core 45-65% of Total Load Weight, Remainder 35-55% of Total Load Weight

Values to be input manually

THIS DOCUMENT IS NOT AN ASTM STANDARD; IT IS UNDER CONSIDERATION WITHIN AN ASTM TECHNICAL COMMITTEE BUT HAS NOT RECEIVED ALL APPROVALS REQUIRED TO BECOME AN ASTM STANDARD. IT SHALL NOT BE REPRODUCED OR CIRCULATED OR QUOTED, IN WHOLE OR IN PART, OUTSIDE OF ASTM COMMITTEE ACTIVITIES EXCEPT WITH THE APPROVAL OF THE CHAIRMAN OF THE COMMITTEE HAVING JURISDICTION AND THE PRESIDENT OF THE SOCIETY. *COPYRIGHT ASTM, 100 BARR HARBOR DRIVE, WEST CONSHOHOCKEN, PA 19428. ALL RIGHTS RESERVED.*

For Usable Firebox Volumes up to 3.0 ft^3 - Low and Medium Fire

Nominal Required Load Density (wet basis)	12	lb/ft^3					
Usable Firebox Volume	1,45	ft^3					
Total Nom. Load Wt. Target	17,4	lb					
Total Load Wt. Allowable Range	16,53	to	18,27	lb			
Core Target Wt. Allowable Range	7,83	to	11,31	lb			
Remainder Load Wt. Allowable Range	6,09	to	9,57	lb			
						Mid-Point	
Core Load Fuel Pc. Wt. Allowable Range	2,61	to	4,35	lb		3,48	
Remainder Load Pc. Wt. Allowable Range	1,74	to	5,22	lb		3,48	
	Pc. #						
Core Load Piece Wt. Actual	1	3,02	lb	In Range			
	2	3,63	lb	In Range			
	3	3,82	lb	In Range			
Core Load Total. Wt. Actual		10,48	lb	In Range			
	Pc. #						
Remainder Load Piece Wt.	1	2,03	lb	In Range			
(2 or 3 Pcs.)	2	4,35	lb	In Range			
	3		lb	NA			
Remainder Load Piece Weight Ratio - Small/Large		47%		In Range		≤ 67%	
Remainder Load Tot. Wt. Act		6,38	lb	In Range			
Total Load Wt. Actual		16,86	lb	In Range			
Core % of Total Wt.		62%		In Range		45-65%	
Remainder % of Total Wt.		38%		In Range		35-55%	
Actual Load % of Nominal Target		97%		In Range		95-105%	
Actual Fuel Load Density		11,6	lb/ft^3				
Allowable Charcoal Bed Wt. Range (lb)	1,7	to	3,3			Mid-Point	
Actual Charcoal Bed Wt.		2,0	lb	In Range		2,5	
Actual Fuel Load Ending Wt.		0,0	lb	Valid Test		≥ 90%	
Total Wt. of Fuel Burned During Test Run lb.		16,9	lb				
Load pieces Length in.		16	in.				

Fuel Piece Moisture Reading (%-dry basis)

1	2	3	Ave.		Pc. Wt. Dry Basis			
27,7	21,1	19,3	22,7	In Range	2,46	lb	1,12	kg
23,4	26,8	25,1	25,1	In Range	2,90	lb	1,32	kg
23,3	20,1	19,1	20,8	In Range	3,16	lb	1,44	kg
22,1	21	19,1	20,7	In Range	1,68	lb	0,76	kg
27,8	26,9	21,1	25,3	In Range	3,47	lb	1,58	kg
			NA	NA	NA	lb	NA	kg
Total Load Ave. MC % (dry basis)			23,2	In Range				
Total Load Ave. MC % (wet basis)			18,8					
Total Test Load Weight (dry basis) →					13,68	lb	6,21	kg
Total Fuel Weight Burned During Test Run (dry basis)					13,7	lb	6,21	kg

For Usable Firebox Volumes above 3.0 ft^3 - Low and Medium Fire

Nominal Required Load Density (wet basis)	12	lb/ft^3					
Usable Firebox Volume		ft^3					
Total Nom. Load Wt. Target	0	lb					
Total Load Wt. Allowable Range	0,00	to	0,00	lb			
Core Target Wt. Allowable Range	0,00	to	0,00	lb			
Remainder Load Wt. Allowable Range	0,00	to	0,00	lb			
						Mid-Point	
Core Load Fuel Pc. Wt. Allowable Range	0,00	to	0,00	lb		0,00	
Remainder Load Pc. Wt. Allowable Range	0,00	to	0,00	lb		0,00	
	Pc. #						
Core Load Piece Wt. Actual	1		lb	In Range			
	2		lb	In Range			
	3		lb	In Range			
Core Load Total. Wt. Actual		0,00	lb	In Range			
	Pc. #						
Remainder Load Piece Wt.	1		lb	In Range			
(3 or 4 Pcs.)	2		lb	In Range			
	3		lb	In Range			
	4		lb	NA			
Remainder Load Piece Weight Ratio - Small/Large		#NOMBRE!		#NOMBRE!		≤ 67%	
Remainder Load Tot. Wt. Act		0,00	lb	In Range			
Total Load Wt. Actual		0,00	lb	In Range			
Core % of Total Wt.		#DIV/0!		#DIV/0!		45-65%	
Remainder % of Total Wt.		#DIV/0!		#DIV/0!		35-55%	
Actual Load % of Nominal Target		#DIV/0!		#DIV/0!		95-105%	
Actual Fuel Load Density		#DIV/0!	lb/ft^3				
Allowable Charcoal Bed Wt. Range (lb)	0,1	to	-0,1			Mid-Point	
Actual Charcoal Bed Wt.			lb	Out of Range		0,0	
Actual Fuel Load Ending Wt.			lb	Valid Test		≥ 90%	
Total Wt. of Fuel Burned During Test Run lb.		0,0	lb				

Fuel Piece Moisture Reading (%-dry basis)

1	2	3	Ave.		Pc. Wt. Dry Basis			
			#DIV/0!	#DIV/0!	#DIV/0!	lb	#DIV/0!	kg
			#DIV/0!	#DIV/0!	#DIV/0!	lb	#DIV/0!	kg
			#DIV/0!	#DIV/0!	#DIV/0!	lb	#DIV/0!	kg
			#DIV/0!	#DIV/0!	#DIV/0!	lb	#DIV/0!	kg
			#DIV/0!	#DIV/0!	#DIV/0!	lb	#DIV/0!	kg
			#DIV/0!	#DIV/0!	#DIV/0!	lb	#DIV/0!	kg
			NA	NA	NA	lb	NA	kg
Total Load Ave. MC % (dry basis)			#DIV/0!	#DIV/0!				
Total Load Ave. MC % (wet basis)			#DIV/0!					
Total Test Load Weight (dry basis) →					#DIV/0!	lb	#DIV/0!	kg
Total Fuel Weight Burned During Test Run (dry basis)					#DIV/0!	lb	#DIV/0!	kg

	Start	End
Barometer (kPa):	101,6	101,2
Barometer (in.Hg):	30,002469	29,88434875
Dry Bulb (F):	76,24	79,52
Humidity (%):	16,2	15,1
Air velocity (ft/min)	0	0

High fire test						
DGM #1	Final:	0,000	cuft	Final:		Liter
	Initial:	0,000	cuft	Initial:		Liter
DGM #2	Final:	0,000	cuft	Final:		Liter
	Initial:	0,000	cuft	Initial:		Liter
DGM room				Final:		cuft
				Initial:		cuft

min or med burnrate						
DGM #1	Final:	30328,502	cuft	Final:	858807,520	Liter
	Initial:	30262,816	cuft	Initial:	856947,510	Liter
DGM #2	Final:	28574,795	cuft	Final:	809148,080	Liter
	Initial:	28511,418	cuft	Initial:	807353,440	Liter
DGM room				Final:	801,000	cuft
				Initial:	725,840	cuft

Numéro de la ligne dans "Raw data" à partir duquel les données du test commence	186
Numéro de la ligne dans "Raw data" à partir duquel les données du highfire test commence	na
Numéro de la ligne dans "Raw data" à partir duquel les données du min ou medium fire test commence	186

Autres données à rentrer: dans preload data, load data, traverse et filter set weight

Project nu.	PI 20184
Date	29-01-2019
Technicien	M.M

Tunnel Traverse Worksheet (for velocity calculations)

Static Pressure: 0,35 in. H20
Barometer: 30,002 in. Hg

Pour un tunnel de 12" et plus, prendre 6 lectures

	TUNNEL VELOCITY	TUNNEL TEMP	SQUARE ROOT
	In. wc	°F	
A center			0,0000
B center			0,0000
A1			0,0000
A2			0,0000
A3			0,0000
A4			0,0000
A5			0,0000
A6			0,0000
B1			0,0000
B2			0,0000
B3			0,0000
B4			0,0000
B5			0,0000
B6			0,0000
AVERAGE	#DIV/0!	#DIV/0!	0,0000

PITOT CONSTANT=
0,941

Pour un tunnel moins de 12", prendre 4 lectures

	TUNNEL VELOCITY	TUNNEL TEMP	SQUARE ROOT
	In. wc	°F	
A center	0,062	80,88	0,2490
B center	0,063	81	0,2510
A1	0,050	81,76	0,2236
A2	0,059	82,44	0,2429
A3	0,049	82	0,2214
A4	0,049	81,43	0,2214
B1	0,050	81,330	0,2236
B2	0,067	80,730	0,2588
B3	0,056	80,310	0,2366
B4	0,050	80,110	0,2236
AVERAGE	0,0555	81,1990	0,2352

Project nu.	PI 20184
Date	29-01-2019
Technicien	M.M

Filter set weight Low/ medium fire

	System 1 (g) 1st hour				System 1 (g)				System 2 (g)				Ambient blank (g)	Date	Heure
	probe	front	back	gasket	probe	front	back	gasket	probe	front	back	gasket	Filter		
Number	6	304	305	2	37	306	308	26	38	309	310	28	311		
Before (1)															
Before (2)															
Before (3)															
Before (4)															
Before (5)	61,3752		0,1673	34,6751	107,9734		0,1660	35,5456	110,4340		0,1682	33,6822	0,1270	2019-01-28	17:00
Before (6)	61,3753		0,1674	34,6752	107,9735		0,1659	35,5456	110,4339		0,1683	33,6823	0,1271	2019-01-29	08:00
After (1)	61,376		0,1695	34,6786	107,974		0,1702	35,5472	110,4345		0,1727	33,6869	0,1274	2019-01-29	17:00
After (2)	61,3757		0,1685	34,6781	107,9739		0,1682	35,5468	110,4344		0,1713	33,6862	0,1272	2019-02-07	08:00
After (3)	61,3757		0,1685	34,6781	107,9739		0,1681	35,5468	110,4344		0,1712	33,6862	0,1272	2019-02-08	10:00
After (4)															
After (5)															
After (6)	61,3757		0,1685	34,6781	107,9739		0,1681	35,5468	110,4344		0,1712	33,6862	0,1272	2019-02-08	10:00
Difference	0,0004	0,0000	0,0011	0,0029	0,0004	0,0000	0,0022	0,0012	0,0005	0,0000	0,0029	0,0039	0,0001		
Total (mg)		4,4				8,2				7,3			0,1		
Total ajusté (mg)		**4,30**				**8,10**				**7,20**					

Project nu.	PI 20184
Date	29-01-2019
Technicien	M.M

SFBA EPA EMISSION RESULTS

Test Duration: **331** min

PRESSURE FACTOR:	DGM 1	0,97514	
	DGM 2	0,97567	
	DGM 3	1,00078	
TEMPERATURE FACTORS	DGM 1	0,97235	
	DGM 2	0,97172	
	DGM 3	0,98085	
VOLUMES SAMPLED	DGM 1	62,909	SCft
	DGM 2	59,323	Scft
	DGM 3	73,466	SCft

TOTAL TUNNEL VOLUME : 56634

SAMPLE RATIOS

Sample Train 1:	900,264
Sample Train 2:	954,673

Paticulate concentration

Sample Train 1	**0,000130**	g/dscf
Sample Train 2	**0,000123**	g/dscf
Room	**0,000001**	g/dscf

TOTAL EMISSIONS

Sample Train 1	**7,31**	g
Sample Train 2	**6,89**	g

EMISSION RATES

Sample Train 1	**1,32**	g/hr
Sample Train 2	**1,25**	g/hr

1st hour emission rate **3,96** g/hr

	Train 1	Train 2
Cs	0,0001303	0,00012305

RESULTS

Average emission rate: 1,29 g/hr

Burn Rate : 1,125 Dry kg/hr

BAROMETRIC PRESSURE

Average:	29,94340873	in Hg
Start:	30,00246871	in Hg
End:	29,88434875	in Hg

DGM CONTROLLER VALUES

DGM 1	Final:	30328,502	Cuft
	Initial:	30262,816	Cuft
DGM 2	Final:	28574,795	Cuft
	Initial:	28511,418	Cuft
DGM #3	Final:	801,000	Cuft
	Initial:	725,840	Cuft

TEMPERATURES

DGM 1	543,013	°R
DGM 2	543,368	°R

CALIBRATION FACTORS

DGM 1	1,0101
DGM 2	0,9873
DGM #3	0,9958

TUNNEL FLOW RATE: 171,101 Dscfm

PARTICULATE CATCH

Total Sample Train 1:	8,20	mg
Total Sample Train 2:	7,30	mg
Total Sample Train 1 1st hour:	4,40	mg

DEVIATION: 2,91%

*		*	*	*	*1	*2	*3	*4	*5	*6	*7	*8	Mass flow 1	DGM 1	DGM 1	Filter 1	Mass flow 2	DGM 2	DGM 2	Filter 2
Elapsed		Weight			Flue	Room	Tunnel	Unit	Unit	Unit	Unit	Unit	Reading	Inlet T	Outlet T	Temp	Reading	Inlet T	Outlet T	Temp
Time	Raw data row	Remaining	CO	CO_2	Gas	Temp	Dry Bulb	Top	Back	R.Side	L.Side	Bottom								
min		lbs	%	%	°F	°F	°F	°F	°F	°F	°F	°F	cuft/min	oF	oF	oF	cuft/min	oF	oF	oF
0,00	186,00	16,9	0,4	4,5	366,3	78,8	167,4	447,6	441,0	468,6	471,1	458,9	0,19	83,74	83,22	82,57	0,18	83,86	83,32	83,33
1,0	187,0	16,7	0,2	1,7	384,5	78,8	157,7	431,8	441,0	467,2	467,4	460,5	0,19	83,94	83,23	82,84	0,18	83,99	83,30	83,43
2,0	188,0	16,5	0,3	2,9	422,8	79,2	140,5	429,3	440,4	464,8	463,0	462,3	0,19	84,11	83,25	82,92	0,18	84,08	83,32	83,47
3,0	189,0	16,3	0,4	5,2	499,6	79,1	145,1	444,5	439,0	462,7	457,9	463,9	0,19	84,20	83,28	83,04	0,18	84,11	83,32	83,56
4,0	190,0	16,2	0,2	8,3	522,7	79,1	146,1	466,2	436,5	461,3	452,8	465,7	0,19	84,22	83,30	83,20	0,18	84,14	83,33	83,64
5,0	191,0	16,0	0,2	7,4	528,0	78,9	146,8	484,4	432,5	460,0	447,6	466,8	0,19	84,27	83,33	83,34	0,18	84,18	83,36	83,76
6,0	192,0	15,8	0,2	7,3	548,3	79,1	150,4	503,4	428,8	459,8	442,5	468,1	0,19	84,30	83,35	83,53	0,18	84,22	83,34	83,90
7,0	193,0	15,6	0,2	8,6	555,3	78,9	153,2	525,1	424,9	461,1	437,8	469,1	0,19	84,32	83,40	83,73	0,18	84,25	83,39	84,06
8,0	194,0	15,4	0,2	8,4	551,2	79,1	152,0	538,5	420,7	462,1	433,7	469,8	0,19	84,43	83,44	83,94	0,18	84,32	83,41	84,26
9,0	195,0	15,2	0,3	7,3	533,9	79,1	155,5	541,0	417,0	463,8	430,0	470,2	0,19	84,50	83,47	84,23	0,18	84,37	83,46	84,50
10,0	196,0	15,1	0,3	6,5	532,9	79,1	152,6	544,8	413,0	465,4	426,6	469,8	0,19	84,63	83,51	84,51	0,18	84,42	83,50	84,75
11,0	197,0	14,9	0,3	7,2	560,1	79,4	155,9	551,5	409,0	467,3	423,7	469,1	0,19	84,70	83,57	84,78	0,18	84,49	83,56	85,04
12,0	198,0	14,6	0,2	8,5	687,0	79,6	174,2	590,2	405,2	469,0	423,5	468,4	0,19	84,76	83,60	85,24	0,18	84,54	83,60	85,38
13,0	199,0	14,2	0,3	15,0	733,8	79,7	184,0	642,5	402,2	471,3	425,9	467,2	0,19	84,92	83,65	85,58	0,18	84,65	83,63	85,72
14,0	200,0	13,9	0,2	15,3	740,9	79,9	188,1	686,2	399,9	474,3	430,6	465,8	0,19	85,08	83,72	85,91	0,18	84,77	83,69	86,08
15,0	201,0	13,7	0,1	14,7	666,7	79,7	170,0	708,9	398,9	477,4	437,2	464,1	0,19	85,32	83,80	86,15	0,18	84,92	83,75	86,43
16,0	202,0	13,5	0,4	15,2	591,1	80,0	153,0	709,8	399,0	481,2	444,2	462,2	0,19	85,56	83,88	86,42	0,18	85,07	83,83	86,72
17,0	203,0	13,3	0,2	13,1	543,6	79,9	142,9	698,8	399,3	484,6	450,9	460,1	0,19	85,79	83,93	86,72	0,18	85,21	83,89	87,00
18,0	204,0	13,2	0,2	10,9	509,1	80,1	135,7	683,5	400,1	486,5	456,5	457,9	0,19	85,93	84,00	86,98	0,18	85,30	83,97	87,24
19,0	205,0	13,0	0,4	9,1	487,5	79,9	131,8	665,3	401,4	487,4	460,4	455,6	0,19	85,97	84,05	87,19	0,18	85,37	84,00	87,47
20,0	206,0	12,9	0,4	8,9	473,4	80,1	128,7	650,4	402,5	486,4	462,8	453,3	0,19	86,05	84,07	87,38	0,18	85,44	84,04	87,72
21,0	207,0	12,8	0,4	8,8	461,6	79,8	126,2	637,8	403,2	484,4	463,8	450,8	0,19	86,06	84,10	87,58	0,18	85,49	84,11	87,92
22,0	208,0	12,7	0,4	8,6	452,7	80,0	124,4	624,9	403,6	481,4	463,8	448,3	0,19	86,10	84,15	87,78	0,18	85,53	84,13	88,07
23,0	209,0	12,6	0,4	8,5	444,9	80,3	123,5	613,4	404,3	477,6	463,2	445,5	0,19	86,19	84,17	87,93	0,18	85,58	84,16	88,21
24,0	210,0	12,4	0,4	8,5	437,9	79,7	122,1	603,2	404,2	473,7	462,1	442,8	0,19	86,26	84,24	88,11	0,18	85,65	84,21	88,35
25,0	211,0	12,3	0,4	8,5	436,8	79,7	121,5	597,0	404,2	469,9	460,2	439,9	0,19	86,30	84,24	88,25	0,18	85,66	84,23	88,47
26,0	212,0	12,2	0,3	8,6	433,2	80,2	120,6	589,3	403,7	465,7	458,3	437,3	0,19	86,32	84,30	88,33	0,18	85,68	84,23	88,58
27,0	213,0	12,1	0,3	8,7	430,7	79,8	120,3	584,1	403,0	462,0	456,3	434,4	0,19	86,35	84,34	88,44	0,18	85,72	84,29	88,66
28,0	214,0	12,0	0,3	8,8	425,3	79,9	119,1	579,4	402,8	457,6	454,3	431,3	0,19	86,36	84,36	88,50	0,18	85,78	84,30	88,72
29,0	215,0	11,9	0,3	8,7	421,4	80,1	118,8	576,7	402,4	453,5	452,2	428,3	0,19	86,39	84,41	88,55	0,18	85,81	84,34	88,76
30,0	216,0	11,7	0,3	8,7	418,0	80,2	118,0	572,1	402,4	449,8	450,2	425,3	0,19	86,39	84,46	88,61	0,18	85,85	84,40	88,81
31,0	217,0	11,6	0,4	8,7	415,4	79,9	117,7	567,4	402,4	445,8	448,2	422,2	0,19	86,34	84,47	88,64	0,18	85,81	84,41	88,79
32,0	218,0	11,5	0,3	8,8	413,3	80,1	117,6	563,9	402,9	441,9	446,4	419,2	0,19	86,37	84,50	88,67	0,18	85,86	84,42	88,78
33,0	219,0	11,4	0,3	9,0	412,7	79,9	116,8	561,9	403,2	438,6	444,7	416,1	0,19	86,40	84,50	88,68	0,18	85,84	84,43	88,78
34,0	220,0	11,3	0,3	9,1	412,7	80,4	116,9	560,8	403,7	435,3	443,2	413,2	0,19	86,38	84,55	88,66	0,18	85,84	84,46	88,76
35,0	221,0	11,1	0,2	9,3	413,4	80,2	116,6	560,9	404,0	433,0	441,6	410,2	0,19	86,36	84,57	88,68	0,18	85,84	84,48	88,73
36,0	222,0	11,0	0,2	9,5	414,4	80,3	116,3	560,7	404,4	431,0	440,1	407,2	0,19	86,30	84,61	88,67	0,18	85,85	84,52	88,65
37,0	223,0	10,9	0,2	9,7	417,0	79,6	116,2	562,5	404,9	429,3	438,8	404,2	0,19	86,28	84,66	88,66	0,18	85,87	84,56	88,60
38,0	224,0	10,8	0,2	10,0	419,0	80,2	116,4	562,4	405,6	427,9	437,6	401,4	0,19	86,33	84,69	88,62	0,18	85,90	84,58	88,56
39,0	225,0	10,6	0,2	10,3	423,9	80,2	116,7	565,6	406,1	427,3	436,4	398,4	0,19	86,35	84,71	88,60	0,18	85,90	84,59	88,49
40,0	226,0	10,5	0,1	10,7	426,0	80,1	117,2	569,6	406,2	426,6	435,6	395,7	0,19	86,28	84,74	88,57	0,18	85,91	84,62	88,43
41,0	227,0	10,4	0,1	10,9	429,7	79,7	117,2	572,0	407,0	426,8	435,2	392,9	0,19	86,22	84,75	88,51	0,18	85,90	84,66	88,38
42,0	228,0	10,2	0,1	11,2	435,8	79,8	117,4	581,0	407,2	427,2	435,3	390,3	0,19	86,22	84,78	88,48	0,18	85,90	84,67	88,29
43,0	229,0	10,1	0,1	11,6	441,6	80,1	118,2	588,2	408,6	427,8	435,9	387,7	0,19	86,26	84,80	88,46	0,18	85,89	84,70	88,22
44,0	230,0	10,0	0,1	12,0	442,9	79,8	118,1	592,2	409,3	428,5	437,0	385,2	0,19	86,27	84,80	88,41	0,18	85,90	84,71	88,14
45,0	231,0	9,8	0,1	11,7	444,2	80,2	118,4	596,6	410,1	429,2	438,6	382,4	0,19	86,21	84,85	88,39	0,18	85,88	84,74	88,08
46,0	232,0	9,7	0,1	11,5	440,2	80,0	117,8	598,1	411,0	430,1	440,4	380,0	0,19	86,25	84,87	88,36	0,18	85,93	84,75	88,02
47,0	233,0	9,6	0,1	10,9	438,9	79,6	117,0	599,8	411,7	430,8	441,9	377,6	0,19	86,29	84,91	88,31	0,18	85,95	84,78	87,98
48,0	234,0	9,4	0,2	10,5	436,4	80,4	117,2	599,3	412,4	431,2	443,1	375,3	0,19	86,29	84,93	88,29	0,18	85,95	84,81	87,93
49,0	235,0	9,3	0,2	10,5	434,9	80,5	117,1	598,1	413,2	432,1	443,9	373,1	0,19	86,31	84,94	88,31	0,18	85,95	84,82	87,78
50,0	236,0	9,2	0,2	10,7	434,3	80,4	117,0	598,2	414,1	432,8	444,3	371,0	0,19	86,31	84,94	88,26	0,18	85,91	84,83	87,74
51,0	237,0	9,1	0,2	10,8	433,5	80,2	117,0	597,5	415,5	433,9	444,5	369,0	0,19	86,26	84,96	88,23	0,18	85,94	84,85	87,71
52,0	238,0	8,9	0,1	11,1	432,8	80,6	117,1	598,7	416,7	435,4	444,7	367,0	0,19	86,26	84,99	88,20	0,18	85,95	84,88	87,71
53,0	239,0	8,8	0,2	11,3	433,0	80,3	116,8	599,5	418,2	436,4	444,8	365,1	0,19	86,27	85,02	88,17	0,18	85,98	84,90	87,64
54,0	240,0	8,7	0,1	11,5	434,6	79,9	116,6	602,7	419,5	437,8	444,9	363,4	0,19	86,28	85,04	88,13	0,18	85,99	84,90	87,58
55,0	241,0	8,5	0,2	11,5	437,8	80,1	117,4	606,0	421,0	439,2	445,1	361,7	0,19	86,21	85,04	88,10	0,18	85,96	84,95	87,56
56,0	242,0	8,4	0,2	11,7	439,6	80,6	117,1	608,2	422,5	441,2	445,4	360,1	0,19	86,22	85,07	88,09	0,18	85,99	84,97	87,56
57,0	243,0	8,3	0,2	11,7	440,2	80,4	117,0	610,1	424,2	443,1	445,7	358,6	0,19	86,16	85,07	88,09	0,18	85,98	84,98	87,54
58,0	244,0	8,2	0,1	11,7	442,1	80,4	117,0	611,5	425,7	445,5	446,0	357,2	0,19	86,13	85,07	88,03	0,18	85,96	85,01	87,53
59,0	245,0	8,0	0,1	11,7	440,9	79,5	117,4	614,8	427,3	447,2	446,6	355,9	0,19	86,08	85,09	88,00	0,18	85,94	85,04	87,52
60,0	246,0	7,9	0,2	11,7	442,1	80,1	117,0	616,9	428,9	449,6	447,1	354,6	0,19	86,02	85,11	88,01	0,18	85,92	85,05	87,53
61,0	247,0	7,8	0,1	11,7	441,6	80,0	116,8	617,0	430,9	451,6	447,6	353,5	0,19	86,04	85,11	87,95	0,18	85,90	85,07	87,50
62,0	248,0	7,6	0,1	11,7	442,8	80,1	116,9	618,6	432,5	453,6	448,3	352,3	0,19	86,11	85,14	87,91	0,18	85,92	85,10	87,35
63,0	249,0	7,5	0,1	11,7	442,5	80,2	116,6	618,3	434,1	455,3	448,9	351,3	0,19	86,11	85,13	87,88	0,18	85,92	85,09	87,17
64,0	250,0	7,4	0,1	11,7	441,9	80,3	116,6	619,6	435,8	457,3	449,6	350,4	0,19	86,17	85,14	87,87	0,18	85,92	85,11	87,06
65,0	251,0	7,3	0,1	11,6	441,5	80,1	116,6	618,3	437,2	458,9	450,4	349,7	0,19	86,14	85,15	87,86	0,18	85,92	85,11	86,99
66,0	252,0	7,1	0,1	11,5	440,0	80,5	116,7	618,4	438,8	460,6	451,1	348,8	0,19	86,19	85,17	87,83	0,18	85,93	85,15	86,90
67,0	253,0	7,0	0,1	11,5	438,2	80,5	116,7	617,4	440,4	462,3	451,8	348,2	0,19	86,15	85,15	87,80	0,18	85,92	85,17	86,79
68,0	254,0	6,9	0,1	11,6	437,8	80,6	116,4	618,4	441,7	463,3	452,6	347,6	0,19	86,09	85,16	87,78	0,18	85,91	85,17	86,65
69,0	255,0	6,8	0,1	11,6	437,9	79,9	116,1	618,7	443,2	464,6	453,3	347,1	0,19	85,94	85,15	87,75	0,18	85,89	85,19	86,53
70,0	256,0	6,7	0,1	11,6	438,4	80,3	116,4	616,1	444,4	466,1	454,1	346,7	0,19	85,88	85,19	87,75	0,18	85,88	85,22	86,41
71,0	257,0	6,5	0,1	11,6	435,9	80,2	115,9	616,8	445,8	467,0	454,9	346,3	0,19	85,96	85,18	87,72	0,18	85,87	85,24	86,32
72,0	258,0	6,4	0,1	11,5	435,3	80,3	115,6	617,2	447,2	468,2	455,7	346,0	0,19	85,99	85,19	87,70	0,18	85,86	85,23	86,17
73,0	259,0	6,3	0,1	11,4	433,4	80,1	115,7	616,2	448,3	469,5	456,7	345,7	0,19	86,02	85,21	87,68	0,18	85,86	85,26	86,04
74,0	260,0	6,2	0,1	11,4	432,9	80,2	115,7	615,1	449,5	470,6	457,6	345,5	0,19	86,01	85,23	87,69	0,18	85,86	85,27	85,93
75,0	261,0	6,1	0,1	11,4	432,3	80,4	115,5	613,2	450,6	471,5	458,5	345,4	0,19	86,08	85,25	87,70	0,18	85,88	85,30	85,83
76,0	262,0	6,0	0,1	11,4	432,3	80,1	115,1	612,6	451,5	472,4	459,5	345,2	0,19	86,03	85,24	87,67	0,18	85,87	85,32	85,68
77,0	263,0	5,9	0,1	11,3	430,9	80,2	114,7	611,6	452,4	473,6	460,6	345,2	0,19	86,05	85,26	87,66	0,18	85,90	85,36	85,56
78,0	264,0	5,8	0,1	11,3	430,6	80,1	114,9	610,2	453,2	474,7	461,5	345,1	0,19	86,07	85,26	87,67	0,18	85,91	85,34	85,45
79,0	265,0	5,7	0,1	11,2	431,4	80,0	114,3	609,0	454,2	475,4	462,3	345,1	0,19	86,12	85,24	87,64	0,18	85,93	85,36	85,34
80,0	266,0	5,6	0,1	11,1	430,8	80,2	114,6	607,2	455,2	476,2	463,1	345,1	0,19	86,15	85,28	87,65	0,18	85,95	85,37	85,23
81,0	267,0	5,5	0,1	10,8	424,7	80,6	114,2	606,4	455,9	476,7	463,9	345,2	0,19	86,21	85,27	87,64	0,18	85,97	85,37	85,13

82,0	268,0	5,4	0,1	10,4	419,0	80,3	113,6	604,7	456,8	476,9	465,0	345,4	0,19	86,26	85,29	87,63	0,18	86,00	85,41	85,03
83,0	269,0	5,3	0,1	9,9	414,9	79,9	113,1	600,7	457,4	476,3	466,4	345,4	0,19	86,27	85,30	87,59	0,18	86,02	85,42	84,93
84,0	270,0	5,2	0,1	9,5	409,8	80,2	112,6	596,9	458,1	475,3	467,5	345,5	0,19	86,29	85,29	87,59	0,18	86,01	85,44	84,85
85,0	271,0	5,2	0,2	8,8	403,7	80,3	111,9	591,3	458,4	473,7	468,4	345,6	0,19	86,29	85,29	87,58	0,18	86,01	85,43	84,74
86,0	272,0	5,1	0,2	8,2	395,9	80,2	111,0	583,3	458,1	471,2	469,0	345,8	0,19	86,25	85,27	87,54	0,18	86,00	85,43	84,63
87,0	273,0	5,0	0,3	7,7	391,1	79,9	110,9	574,2	458,0	468,9	469,3	346,0	0,19	86,18	85,24	87,51	0,18	85,98	85,45	84,55
88,0	274,0	5,0	0,4	7,4	385,6	80,1	109,9	565,2	457,0	466,0	469,4	346,1	0,19	86,12	85,26	87,48	0,18	85,96	85,47	84,45
89,0	275,0	4,9	0,4	7,3	383,0	79,8	109,5	557,3	455,9	463,1	469,2	346,5	0,19	86,04	85,25	87,45	0,18	85,91	85,47	84,34
90,0	276,0	4,9	0,4	7,3	380,0	79,3	109,4	550,8	454,1	459,5	468,4	346,7	0,19	85,99	85,23	87,46	0,18	85,87	85,45	84,26
91,0	277,0	4,8	0,4	7,2	376,1	79,8	108,8	543,3	452,2	456,3	467,3	346,9	0,19	85,95	85,23	87,42	0,18	85,85	85,46	84,16
92,0	278,0	4,8	0,5	7,2	373,3	79,4	108,5	536,1	449,9	453,1	466,0	347,1	0,19	85,93	85,23	87,39	0,18	85,80	85,46	84,06
93,0	279,0	4,7	0,5	7,1	369,6	79,5	108,3	529,0	447,9	449,8	464,5	347,4	0,19	85,84	85,21	87,34	0,18	85,76	85,44	83,97
94,0	280,0	4,7	0,5	7,0	365,5	79,4	107,8	523,4	445,4	446,5	462,9	347,8	0,19	85,79	85,21	87,32	0,18	85,75	85,43	83,86
95,0	281,0	4,6	0,5	6,9	362,4	79,4	107,6	517,6	443,3	443,1	461,2	348,1	0,19	85,78	85,20	87,25	0,18	85,70	85,43	83,80
96,0	282,0	4,6	0,5	6,8	358,4	79,7	107,4	511,2	440,7	440,2	459,4	348,4	0,19	85,77	85,19	87,22	0,18	85,68	85,39	83,70
97,0	283,0	4,5	0,6	6,7	352,6	79,7	106,7	504,4	437,9	437,1	457,4	348,5	0,19	85,72	85,17	87,16	0,18	85,66	85,39	83,63
98,0	284,0	4,5	0,6	6,2	345,0	79,7	106,1	497,4	435,5	434,1	455,2	348,9	0,19	85,70	85,19	87,10	0,18	85,60	85,39	83,54
99,0	285,0	4,4	0,8	5,9	337,5	79,4	105,2	489,9	433,1	431,3	452,8	349,1	0,19	85,60	85,16	87,05	0,18	85,56	85,40	83,45
100,0	286,0	4,4	0,9	5,5	330,5	79,6	104,4	481,4	430,5	428,8	450,1	349,4	0,19	85,48	85,17	87,01	0,18	85,52	85,38	83,37
101,0	287,0	4,4	1,0	5,5	326,0	79,3	104,2	474,1	428,3	426,0	447,1	349,7	0,19	85,43	85,13	86,95	0,18	85,47	85,33	83,29
102,0	288,0	4,3	0,9	5,4	321,4	79,4	103,8	465,4	425,4	423,1	444,0	349,9	0,19	85,41	85,13	86,90	0,18	85,42	85,33	83,22
103,0	289,0	4,3	1,0	5,4	316,9	79,4	103,0	459,2	422,6	420,4	440,9	350,2	0,19	85,27	85,10	86,82	0,18	85,36	85,32	83,11
104,0	290,0	4,2	1,0	5,3	317,6	79,5	103,3	454,7	420,3	418,3	437,7	350,6	0,19	85,16	85,10	86,75	0,18	85,29	85,31	83,07
105,0	291,0	4,2	1,1	5,3	321,7	79,4	103,3	448,4	417,5	415,5	434,6	351,0	0,19	85,10	85,09	86,69	0,18	85,26	85,28	82,99
106,0	292,0	4,2	1,0	5,3	322,6	79,1	104,0	442,1	415,3	413,2	431,6	351,4	0,19	85,02	85,04	86,64	0,18	85,20	85,27	82,92
107,0	293,0	4,1	1,0	5,4	323,9	79,1	103,9	437,8	412,5	410,9	428,7	351,7	0,19	84,99	85,03	86,57	0,18	85,15	85,25	82,82
108,0	294,0	4,1	0,9	5,5	323,3	79,2	103,6	433,4	410,4	408,8	426,3	352,1	0,19	84,95	85,01	86,52	0,18	85,12	85,24	82,77
109,0	295,0	4,0	0,9	5,5	323,0	79,4	103,3	429,8	408,2	406,9	423,7	352,5	0,19	84,91	85,00	86,44	0,18	85,07	85,23	82,72
110,0	296,0	4,0	0,9	5,4	321,9	79,2	103,6	427,2	406,1	405,2	421,4	352,8	0,19	84,81	84,98	86,38	0,18	85,02	85,23	82,63
111,0	297,0	4,0	0,9	5,5	321,3	79,4	103,1	424,4	404,0	403,6	419,4	353,4	0,19	84,69	84,94	86,30	0,18	84,95	85,23	82,56
112,0	298,0	3,9	0,9	5,5	320,4	79,4	103,2	422,5	402,4	401,9	417,4	353,8	0,19	84,57	84,93	86,25	0,18	84,88	85,22	82,52
113,0	299,0	3,9	0,9	5,5	320,2	79,6	103,2	420,9	400,8	400,4	415,6	354,2	0,19	84,51	84,91	86,19	0,18	84,88	85,20	82,46
114,0	300,0	3,9	0,9	5,5	319,4	79,4	103,0	418,9	399,2	399,0	413,8	354,7	0,19	84,51	84,88	86,12	0,18	84,82	85,18	82,40
115,0	301,0	3,8	0,9	5,5	319,0	79,4	103,1	417,2	397,7	397,9	412,0	355,3	0,19	84,52	84,90	86,05	0,18	84,81	85,16	82,33
116,0	302,0	3,8	0,8	5,5	318,9	79,5	103,3	415,0	396,4	396,7	410,4	355,8	0,19	84,53	84,91	86,00	0,18	84,81	85,15	82,28
117,0	303,0	3,7	0,8	5,6	317,8	79,3	103,2	413,8	395,3	395,8	408,8	356,4	0,19	84,51	84,87	85,97	0,18	84,76	85,16	82,20
118,0	304,0	3,7	0,8	5,6	318,6	79,6	103,0	412,4	394,1	394,8	407,3	357,1	0,19	84,50	84,86	85,92	0,18	84,76	85,17	82,18
119,0	305,0	3,7	0,8	5,7	318,4	79,8	103,3	410,7	392,9	393,8	405,8	357,8	0,19	84,49	84,86	85,84	0,18	84,76	85,16	82,12
120,0	306,0	3,6	0,8	5,8	319,2	79,8	103,1	409,3	392,2	393,2	404,4	358,5	0,19	84,46	84,84	85,79	0,18	84,71	85,16	82,06
121,0	307,0	3,6	0,8	5,8	319,6	79,2	103,1	409,6	391,6	392,6	403,1	359,4	0,19	84,41	84,84	85,76	0,18	84,68	85,15	82,01
122,0	308,0	3,5	0,7	6,0	320,4	79,7	103,0	409,5	391,0	391,8	401,8	360,1	0,19	84,35	84,83	85,73	0,18	84,65	85,13	81,98
123,0	309,0	3,5	0,7	6,0	321,8	79,2	103,2	409,9	390,4	391,4	400,8	360,8	0,19	84,38	84,82	85,66	0,18	84,67	85,14	81,91
124,0	310,0	3,4	0,7	6,1	323,8	79,2	102,5	412,1	389,6	390,4	400,1	361,6	0,19	84,34	84,82	85,62	0,18	84,65	85,13	89,74
125,0	311,0	3,4	0,6	6,2	325,9	79,2	102,8	411,9	389,3	390,4	398,9	362,6	0,19	84,28	84,81	85,53	0,18	84,60	85,12	89,35
126,0	312,0	3,3	0,6	6,4	329,5	79,1	103,6	413,3	389,3	390,2	398,0	363,4	0,19	84,25	84,79	85,53	0,18	84,58	85,11	89,29
127,0	313,0	3,3	0,5	6,6	332,2	79,1	103,4	415,8	389,2	390,0	397,3	364,3	0,19	84,23	84,79	85,46	0,18	84,56	85,07	89,64
128,0	314,0	3,3	0,5	6,8	334,6	79,1	103,8	418,3	389,8	390,1	396,9	365,3	0,19	84,22	84,77	85,44	0,18	84,55	85,08	87,55
129,0	315,0	3,2	0,4	6,9	339,2	79,0	104,0	421,6	389,9	390,3	396,7	366,3	0,19	84,20	84,76	85,40	0,18	84,55	85,06	86,21
130,0	316,0	3,2	0,4	7,1	342,9	78,9	104,2	425,9	390,1	390,7	396,6	367,2	0,19	84,21	84,75	85,37	0,18	84,54	85,05	85,27
131,0	317,0	3,1	0,4	7,3	346,9	78,9	104,4	429,9	391,3	391,4	396,8	368,2	0,19	84,02	84,72	85,31	0,18	84,44	85,01	85,03
132,0	318,0	3,1	0,3	7,4	349,2	79,1	104,6	434,7	392,2	392,2	397,2	369,1	0,19	83,98	84,70	85,24	0,18	84,45	85,00	85,24
133,0	319,0	3,0	0,3	7,5	351,6	79,0	104,2	439,4	393,3	392,9	398,0	370,3	0,19	83,93	84,67	85,19	0,18	84,43	84,99	85,43
134,0	320,0	3,0	0,3	7,5	354,0	79,4	104,7	444,2	394,2	394,3	398,6	371,4	0,19	84,00	84,66	85,17	0,18	84,41	85,00	85,57
135,0	321,0	2,9	0,2	7,6	356,4	78,7	105,0	449,7	396,3	395,3	399,6	372,4	0,19	83,99	84,65	85,13	0,18	84,38	84,99	85,63
136,0	322,0	2,9	0,2	7,5	355,0	78,7	104,8	452,5	397,9	396,7	400,7	373,5	0,19	83,87	84,63	85,11	0,18	84,35	84,96	85,69
137,0	323,0	2,8	0,2	7,2	351,6	78,9	104,9	453,6	399,4	397,9	401,9	374,5	0,19	83,83	84,59	85,09	0,18	84,32	84,96	85,73
138,0	324,0	2,8	0,3	6,7	345,3	78,6	104,4	454,0	400,9	399,0	402,9	375,5	0,19	83,90	84,59	85,07	0,18	84,32	84,93	85,74
139,0	325,0	2,8	0,4	6,1	340,6	78,6	104,1	450,9	402,6	399,9	403,8	376,5	0,19	83,80	84,56	85,06	0,18	84,28	84,92	85,76
140,0	326,0	2,8	0,4	5,9	337,0	78,7	103,4	447,6	403,3	400,4	404,7	377,3	0,19	83,69	84,53	85,02	0,18	84,22	84,90	85,76
141,0	327,0	2,7	0,4	5,9	333,3	78,4	102,9	442,9	404,5	400,9	405,2	378,2	0,19	83,58	84,48	85,00	0,18	84,14	84,87	85,74
142,0	328,0	2,7	0,4	5,8	330,9	78,2	102,7	439,6	405,2	401,5	405,5	379,1	0,19	83,58	84,47	84,96	0,18	84,09	84,87	85,70
143,0	329,0	2,7	0,5	5,7	328,1	78,1	102,6	435,4	405,8	401,2	405,8	380,1	0,19	83,55	84,43	84,91	0,18	84,03	84,85	85,69
144,0	330,0	2,7	0,5	5,7	325,4	78,1	101,9	430,8	406,3	401,1	405,9	381,0	0,19	83,53	84,40	84,90	0,18	83,99	84,82	85,64
145,0	331,0	2,6	0,5	5,7	323,1	78,1	102,0	427,3	406,6	400,7	405,8	381,8	0,19	83,43	84,40	84,88	0,18	83,95	84,79	85,62
146,0	332,0	2,6	0,5	5,7	321,1	78,4	102,2	423,0	406,7	400,5	405,6	382,7	0,19	83,47	84,36	84,85	0,18	83,91	84,75	85,56
147,0	333,0	2,6	0,5	5,7	319,1	78,3	101,7	419,4	406,9	400,1	405,3	383,5	0,19	83,55	84,35	84,83	0,18	83,93	84,74	85,51
148,0	334,0	2,6	0,5	5,7	319,5	78,3	101,4	415,4	406,6	399,6	404,8	384,4	0,19	83,43	84,30	84,81	0,18	83,87	84,70	85,47
149,0	335,0	2,5	0,5	5,4	316,0	78,5	101,6	413,2	406,7	399,1	404,2	385,3	0,19	83,38	84,26	84,77	0,18	83,82	84,69	85,44
150,0	336,0	2,5	0,6	5,3	313,1	78,2	101,0	409,2	406,3	398,6	403,5	386,2	0,19	83,32	84,25	84,73	0,18	83,80	84,66	85,38
151,0	337,0	2,5	0,7	5,1	309,4	78,0	100,7	405,0	405,7	398,1	402,5	387,0	0,19	83,18	84,19	84,71	0,18	83,71	84,64	85,28
152,0	338,0	2,5	0,7	5,0	306,6	77,9	100,3	401,1	404,8	397,5	401,5	387,8	0,19	83,03	84,15	84,66	0,18	83,62	84,60	85,21
153,0	339,0	2,5	0,7	5,0	304,5	77,8	100,4	397,2	403,9	396,9	400,3	388,5	0,19	83,02	84,14	84,62	0,18	83,58	84,57	85,18
154,0	340,0	2,4	0,7	5,0	301,5	77,9	99,9	392,7	402,8	396,3	399,0	389,3	0,19	83,00	84,11	84,59	0,18	83,54	84,55	85,10
155,0	341,0	2,4	0,7	4,9	299,1	77,8	99,5	388,9	402,0	395,7	397,6	390,0	0,19	83,01	84,07	84,53	0,18	83,51	84,53	85,01
156,0	342,0	2,4	0,8	4,9	297,6	78,1	99,6	385,8	400,9	394,6	396,1	390,7	0,19	82,99	84,02	84,51	0,18	83,48	84,51	84,97
157,0	343,0	2,4	0,8	4,9	295,0	78,0	99,2	382,3	399,5	393,7	394,5	391,3	0,19	82,99	84,01	84,48	0,18	83,49	84,50	84,91
158,0	344,0	2,4	0,8	4,9	293,3	78,1	99,0	379,4	397,8	392,8	393,0	391,9	0,19	82,99	83,96	84,42	0,18	83,46	84,46	84,80
159,0	345,0	2,3	0,8	4,9	291,3	78,2	99,0	375,8	397,0	391,8	391,4	392,6	0,19	83,00	83,94	84,39	0,18	83,44	84,43	84,76
160,0	346,0	2,3	0,8	4,9	290,3	77,9	98,9	373,4	395,6	390,7	389,7	393,2	0,19	82,99	83,93	84,34	0,18	83,44	84,40	84,71
161,0	347,0	2,3	0,8	4,9	288,5	77,7	99,0	369,6	394,3	389,9	388,2	393,9	0,19	82,94	83,90	84,33	0,18	83,43	84,41	84,61
162,0	348,0	2,3	0,8	4,9	286,9	78,0	98,9	367,9	393,3	388,8	386,5	394,4	0,19	82,97	83,90	84,27	0,18	83,42	84,39	84,56
163,0	349,0	2,3	0,8	4,9	286,3	77,8	98,4	365,3	391,9	388,1	384,9	395,0	0,19	82,98	83,87	84,26	0,18	83,42	84,37	84,52
164,0	350,0	2,3	0,8	4,9	285,2	77,9	98,2	363,0	391,0	386,9	383,3	395,5	0,19	82,84	83,81	84,18	0,18	83,36	84,34	84,45
165,0	351,0	2,2	0,8	4,9	284,2	77,9	98,0	361,9	389,4	385,9	381,8	396,0	0,19	82,72	83,78	84,14	0,18	83,32	84,31	84,38
166,0	352,0	2,2	0,8	4,9	282,9	77,7	98,0	358,8	388,3	384,8	380,3	396,5	0,19	82,72	83,74	84,08	0,18	83,29	84,29	84,31
167,0	353,0	2,2	0,8	4,9	282,6	77,8	97,7	357,3	387,2	383,9	378,9	396,8	0,19	82,70	83,72	84,04	0,18	83,24	84,28	84,25

168,0	354,0	2,2	0,8	4,9	281,4	77,7	97,1	356,7	385,9	383,1	377,5	397,3	0,19	82,65	83,70	84,01	0,18	83,17	84,24	84,18
169,0	355,0	2,2	0,8	4,9	280,2	77,6	97,3	354,8	384,6	382,1	376,1	397,6	0,19	82,63	83,66	83,93	0,18	83,11	84,19	84,11
170,0	356,0	2,1	0,8	4,8	278,7	77,4	96,9	352,5	383,8	381,3	374,8	397,9	0,19	82,64	83,64	83,88	0,18	83,09	84,16	84,02
171,0	357,0	2,1	0,8	4,8	278,5	77,8	96,4	353,5	382,7	380,4	373,5	398,2	0,19	82,62	83,63	83,87	0,18	83,06	84,13	83,99
172,0	358,0	2,1	0,8	4,8	277,4	77,6	96,5	350,5	381,9	379,4	372,2	398,3	0,19	82,57	83,59	83,77	0,18	83,01	84,11	83,87
173,0	359,0	2,1	0,8	4,8	276,5	77,6	96,4	349,4	381,1	378,7	371,0	398,5	0,19	82,53	83,56	83,71	0,18	82,97	84,07	83,83
174,0	360,0	2,1	0,8	4,8	275,8	77,6	96,3	347,4	380,2	377,9	369,7	398,8	0,19	82,47	83,52	83,67	0,18	82,94	84,06	83,76
175,0	361,0	2,1	0,8	4,8	275,3	77,4	95,7	346,6	379,4	376,9	368,5	399,0	0,19	82,42	83,50	83,60	0,18	82,91	84,02	83,68
176,0	362,0	2,0	0,8	4,8	274,5	77,4	95,9	344,3	378,7	376,4	367,4	399,0	0,19	82,37	83,49	83,57	0,18	82,87	84,01	83,63
177,0	363,0	2,0	0,8	4,7	273,1	77,5	95,9	342,9	378,1	375,5	366,2	399,2	0,19	82,29	83,46	83,52	0,18	82,83	83,96	83,57
178,0	364,0	2,0	0,8	4,6	272,6	77,4	95,7	341,9	377,3	374,9	365,0	399,4	0,19	82,20	83,39	83,47	0,18	82,76	83,95	83,50
179,0	365,0	2,0	0,8	4,6	272,1	76,7	95,5	340,9	376,0	373,9	363,8	399,4	0,19	82,08	83,36	83,38	0,18	82,71	83,93	83,43
180,0	366,0	2,0	0,8	4,6	271,5	76,7	95,6	339,6	375,4	373,0	362,6	399,7	0,19	81,92	83,30	83,33	0,18	82,61	83,88	83,35
181,0	367,0	2,0	0,8	4,6	270,7	76,4	95,2	337,8	374,7	371,9	361,6	399,9	0,19	81,86	83,26	83,27	0,18	82,57	83,86	83,28
182,0	368,0	1,9	0,8	4,6	270,3	76,9	95,0	337,2	374,0	371,2	360,3	399,9	0,19	81,77	83,23	83,19	0,18	82,49	83,82	83,20
183,0	369,0	1,9	0,8	4,6	269,2	77,3	95,1	335,6	373,6	370,3	359,2	400,2	0,19	81,73	83,20	83,14	0,18	82,44	83,76	83,14
184,0	370,0	1,9	0,8	4,6	269,2	77,7	95,1	334,0	373,5	369,7	358,1	400,3	0,19	81,73	83,16	83,07	0,18	82,41	83,72	83,08
185,0	371,0	1,9	0,8	4,6	268,7	77,7	95,1	333,3	373,0	369,1	356,9	400,5	0,19	81,74	83,14	82,98	0,18	82,39	83,69	83,01
186,0	372,0	1,9	0,8	4,6	268,4	77,7	94,7	333,8	372,4	367,9	355,9	400,7	0,19	81,65	83,10	82,94	0,18	82,36	83,67	82,96
187,0	373,0	1,9	0,8	4,6	267,6	77,7	94,5	332,0	371,7	367,0	355,0	400,9	0,19	81,59	83,07	82,87	0,18	82,34	83,64	82,89
188,0	374,0	1,8	0,8	4,5	267,0	78,0	94,8	330,7	371,1	366,5	354,0	401,1	0,19	81,60	83,06	82,83	0,18	82,33	83,62	82,84
189,0	375,0	1,8	0,8	4,6	266,7	78,1	95,0	329,1	370,7	365,6	353,1	401,4	0,19	81,69	83,05	82,79	0,18	82,32	83,60	82,79
190,0	376,0	1,8	0,8	4,5	266,0	77,7	94,8	329,3	369,9	364,8	352,2	401,4	0,19	81,64	83,01	82,73	0,18	82,31	83,58	82,75
191,0	377,0	1,8	0,8	4,5	264,8	78,0	94,7	328,1	369,9	364,0	351,3	401,6	0,19	81,59	82,97	82,68	0,18	82,28	83,60	82,67
192,0	378,0	1,8	0,8	4,5	265,2	78,0	94,7	327,4	369,5	363,3	350,5	401,6	0,19	81,54	82,97	82,62	0,18	82,27	83,55	82,61
193,0	379,0	1,8	0,8	4,6	264,3	78,0	94,8	326,4	369,1	362,4	349,7	401,7	0,19	81,50	82,94	82,59	0,18	82,26	83,55	82,52
194,0	380,0	1,8	0,8	4,5	264,0	78,2	94,6	325,1	368,4	361,7	348,9	401,7	0,19	81,47	82,91	82,54	0,18	82,21	83,51	82,50
195,0	381,0	1,7	0,8	4,5	263,6	78,3	94,7	324,6	368,0	360,9	348,2	401,6	0,19	81,50	82,87	82,50	0,18	82,20	83,49	82,45
196,0	382,0	1,7	0,8	4,5	263,1	77,7	94,3	323,6	367,3	360,3	347,5	401,7	0,19	81,58	82,86	82,47	0,18	82,20	83,46	82,42
197,0	383,0	1,7	0,8	4,5	262,1	78,2	94,4	323,6	366,8	359,4	346,9	401,5	0,19	81,58	82,84	82,48	0,18	82,21	83,45	82,39
198,0	384,0	1,7	0,8	4,3	260,9	78,0	94,2	322,9	366,3	358,8	346,1	401,4	0,19	81,45	82,78	82,40	0,18	82,14	83,40	82,32
199,0	385,0	1,7	0,8	4,3	260,6	78,1	94,3	321,7	366,1	358,0	345,4	401,1	0,19	81,42	82,77	82,39	0,18	82,10	83,38	82,30
200,0	386,0	1,7	0,7	4,3	259,7	78,2	94,2	319,8	365,5	357,1	344,8	401,0	0,19	81,45	82,75	82,39	0,18	82,14	83,38	82,28
201,0	387,0	1,6	0,7	4,3	258,9	78,4	94,2	319,0	365,0	356,5	344,0	400,6	0,19	81,57	82,75	82,34	0,18	82,17	83,36	82,26
202,0	388,0	1,6	0,7	4,3	257,6	78,2	93,9	318,0	364,4	355,6	343,4	400,6	0,19	81,62	82,75	82,32	0,18	82,18	83,34	82,22
203,0	389,0	1,6	0,7	4,3	257,4	78,1	93,9	317,5	363,8	354,5	342,7	400,2	0,19	81,62	82,74	82,27	0,18	82,14	83,31	82,19
204,0	390,0	1,6	0,7	4,3	256,4	78,0	93,9	316,6	363,3	353,7	342,0	400,0	0,19	81,51	82,73	82,28	0,18	82,11	83,32	82,20
205,0	391,0	1,6	0,7	4,3	255,5	78,0	93,9	315,4	362,6	352,6	341,3	399,6	0,19	81,35	82,67	82,26	0,18	82,04	83,28	82,17
206,0	392,0	1,6	0,7	4,3	255,4	77,9	93,6	315,4	361,8	351,7	340,6	399,3	0,19	81,19	82,62	82,23	0,18	81,96	83,25	82,15
207,0	393,0	1,6	0,7	4,2	254,2	77,4	93,6	314,6	361,0	350,8	339,8	398,9	0,19	81,11	82,59	82,20	0,18	81,90	83,24	82,10
208,0	394,0	1,5	0,7	4,2	253,4	77,7	93,6	313,0	360,3	349,8	339,1	398,5	0,19	81,01	82,56	82,20	0,18	81,84	83,18	82,08
209,0	395,0	1,5	0,7	4,2	252,9	77,6	93,5	312,4	359,9	349,0	338,4	398,3	0,19	80,96	82,55	82,17	0,18	81,79	83,14	82,07
210,0	396,0	1,5	0,7	4,2	252,7	77,9	93,6	311,1	359,4	348,0	337,7	397,9	0,19	80,96	82,51	82,16	0,18	81,75	83,13	82,03
211,0	397,0	1,5	0,7	4,2	252,2	77,4	93,5	311,1	358,9	347,0	336,9	397,7	0,19	80,92	82,49	82,12	0,18	81,67	83,10	82,03
212,0	398,0	1,5	0,7	4,2	251,2	77,7	93,4	310,1	357,9	346,0	336,2	397,3	0,19	80,88	82,45	82,06	0,18	81,65	83,07	81,99
213,0	399,0	1,5	0,7	4,1	249,7	77,5	93,0	309,5	357,4	345,1	335,5	396,9	0,19	80,89	82,44	82,07	0,18	81,66	83,06	81,96
214,0	400,0	1,5	0,7	4,1	249,5	77,6	92,9	309,2	356,7	344,3	334,9	396,8	0,19	80,93	82,40	82,04	0,18	81,64	83,04	81,93
215,0	401,0	1,4	0,7	4,1	248,7	77,6	93,0	307,8	356,3	343,2	334,1	396,4	0,19	80,92	82,40	82,03	0,18	81,62	83,01	81,91
216,0	402,0	1,4	0,7	4,1	247,8	77,7	92,8	306,8	355,6	342,1	333,3	396,1	0,19	80,85	82,34	81,99	0,18	81,59	82,99	81,89
217,0	403,0	1,4	0,7	4,1	246,9	77,6	92,8	306,8	355,0	341,2	332,6	395,7	0,19	80,83	82,34	81,93	0,18	81,57	82,98	81,84
218,0	404,0	1,4	0,7	4,0	246,1	77,5	92,6	307,4	353,7	340,0	331,9	395,3	0,19	80,84	82,29	81,89	0,18	81,55	82,93	81,82
219,0	405,0	1,4	0,7	4,0	245,5	77,4	92,9	304,8	353,9	339,1	331,2	394,9	0,19	80,88	82,26	81,90	0,18	81,55	82,93	81,77
220,0	406,0	1,4	0,7	4,1	245,1	77,5	92,8	304,4	353,0	338,0	330,5	394,6	0,19	80,83	82,25	81,88	0,18	81,50	82,89	81,76
221,0	407,0	1,4	0,7	4,1	244,7	77,7	92,5	303,1	352,4	337,2	329,8	394,1	0,19	80,82	82,24	81,84	0,18	81,48	82,87	81,74
222,0	408,0	1,4	0,7	4,0	242,8	77,6	92,4	302,2	351,7	336,3	329,2	393,8	0,19	80,79	82,20	81,85	0,18	81,47	82,86	81,71
223,0	409,0	1,3	0,7	3,8	242,0	77,2	92,3	301,3	351,3	335,3	328,5	393,5	0,19	80,79	82,17	81,83	0,18	81,43	82,83	81,68
224,0	410,0	1,3	0,7	3,7	240,2	77,3	92,5	300,3	350,8	334,3	327,7	393,2	0,19	80,81	82,16	81,78	0,18	81,48	82,83	81,65
225,0	411,0	1,3	0,7	3,7	240,0	77,4	92,3	298,9	349,7	333,7	327,0	392,8	0,19	80,76	82,13	81,76	0,18	81,43	82,79	81,63
226,0	412,0	1,3	0,7	3,7	238,9	76,7	92,3	297,5	349,4	332,4	326,2	392,5	0,19	80,73	82,10	81,70	0,18	81,42	82,76	81,60
227,0	413,0	1,3	0,7	3,7	238,6	77,0	92,2	296,0	348,6	331,4	325,5	392,1	0,19	80,73	82,08	81,70	0,18	81,37	82,74	81,56
228,0	414,0	1,3	0,7	3,7	237,7	77,4	92,0	295,3	347,6	330,3	324,7	391,7	0,19	80,74	82,06	81,67	0,18	81,36	82,72	81,54
229,0	415,0	1,3	0,7	3,7	236,3	77,4	91,7	294,2	347,3	329,3	323,9	391,5	0,19	80,73	82,00	81,63	0,18	81,37	82,69	81,51
230,0	416,0	1,3	0,7	3,6	236,0	77,5	92,0	292,7	346,5	328,3	323,0	391,0	0,19	80,69	82,02	81,63	0,18	81,34	82,68	81,47
231,0	417,0	1,3	0,7	3,7	235,0	77,2	91,9	292,1	346,0	327,3	322,2	390,5	0,19	80,68	81,96	81,58	0,18	81,32	82,66	81,44
232,0	418,0	1,2	0,6	3,6	234,7	77,4	91,6	291,2	345,4	326,3	321,4	389,9	0,19	80,64	81,97	81,60	0,18	81,30	82,62	81,41
233,0	419,0	1,2	0,6	3,6	233,8	77,2	91,4	290,2	344,6	325,3	320,6	389,4	0,19	80,59	81,93	81,56	0,18	81,25	82,61	81,40
234,0	420,0	1,2	0,6	3,6	232,2	76,7	91,3	288,9	344,2	324,3	319,8	388,8	0,19	80,60	81,93	81,52	0,18	81,22	82,59	81,38
235,0	421,0	1,2	0,6	3,6	231,4	77,1	91,2	288,2	343,1	323,3	319,0	388,2	0,19	80,58	81,88	81,53	0,18	81,24	82,58	81,35
236,0	422,0	1,2	0,6	3,6	231,2	77,2	91,2	286,7	342,6	322,3	318,1	387,6	0,19	80,58	81,87	81,47	0,18	81,25	82,57	81,33
237,0	423,0	1,2	0,6	3,5	230,3	77,1	91,0	285,7	342,3	321,5	317,3	386,9	0,19	80,55	81,86	81,46	0,18	81,24	82,53	81,31
238,0	424,0	1,2	0,6	3,6	230,1	77,3	90,9	284,6	341,9	320,4	316,4	386,2	0,19	80,52	81,84	81,43	0,18	81,21	82,51	81,27
239,0	425,0	1,2	0,6	3,6	229,2	77,3	91,2	283,7	341,2	319,4	315,6	385,4	0,19	80,49	81,83	81,42	0,18	81,18	82,51	81,24
240,0	426,0	1,1	0,6	3,6	228,4	77,4	90,7	282,7	340,6	318,3	314,8	384,7	0,19	80,47	81,81	81,41	0,18	81,17	82,47	81,23
241,0	427,0	1,1	0,6	3,6	228,0	77,2	90,7	281,8	339,9	317,3	314,0	383,9	0,19	80,52	81,78	81,37	0,18	81,16	82,43	81,19
242,0	428,0	1,1	0,6	3,5	227,7	77,2	90,5	280,2	339,4	316,5	313,1	383,1	0,19	80,59	81,79	81,36	0,18	81,21	82,43	81,17
243,0	429,0	1,1	0,6	3,6	227,4	77,3	90,9	279,9	339,0	315,4	312,3	382,5	0,19	80,58	81,75	81,31	0,18	81,17	82,42	81,15
244,0	430,0	1,1	0,6	3,6	227,1	76,6	90,5	279,0	338,4	314,7	311,6	381,7	0,19	80,54	81,73	81,28	0,18	81,15	82,43	81,11
245,0	431,0	1,1	0,7	3,6	226,4	77,1	90,9	278,8	337,8	313,6	310,7	381,1	0,19	80,54	81,74	81,24	0,18	81,15	82,40	81,09
246,0	432,0	1,1	0,7	3,6	226,6	76,7	90,6	278,0	337,2	312,7	310,0	380,3	0,19	80,47	81,69	81,21	0,18	81,11	82,39	81,05
247,0	433,0	1,1	0,6	3,6	225,9	77,0	90,7	277,2	336,6	311,9	309,3	379,6	0,19	80,45	81,67	81,21	0,18	81,10	82,35	81,02
248,0	434,0	1,0	0,6	3,6	225,6	77,1	90,6	276,4	336,3	311,3	308,6	378,9	0,19	80,41	81,65	81,17	0,18	81,09	82,33	81,01
249,0	435,0	1,0	0,6	3,7	225,8	77,2	90,5	276,2	335,6	310,3	307,9	378,2	0,19	80,34	81,63	81,15	0,18	81,03	82,32	80,95
250,0	436,0	1,0	0,6	3,7	225,1	77,1	90,4	275,4	335,4	309,7	307,3	377,6	0,19	80,26	81,61	81,13	0,18	80,99	82,28	80,96
251,0	437,0	1,0	0,6	3,7	224,7	77,4	90,3	275,1	335,0	309,1	306,7	377,0	0,19	80,24	81,60	81,10	0,18	80,97	82,25	80,93
252,0	438,0	1,0	0,6	3,7	224,7	77,5	90,4	274,5	334,5	308,5	306,1	376,4	0,19	80,27	81,55	81,09	0,18	80,97	82,24	80,90
253,0	439,0	1,0	0,6	3,7	224,8	77,5	90,4	274,4	334,1	307,9	305,6	375,9	0,19	80,26	81,54	81,05	0,18	80,95	82,21	80,87

254,0	440,0	1,0	0,7	3,7	225,1	77,1	90,3	273,6	333,5	307,4	305,2	375,4	0,19	80,24	81,52	81,03	0,18	80,92	82,19	80,87
255,0	441,0	1,0	0,7	3,7	225,0	77,3	90,3	272,6	333,2	306,9	304,7	374,9	0,19	80,27	81,50	81,02	0,18	80,93	82,17	80,82
256,0	442,0	0,9	0,7	3,7	224,6	77,2	90,4	272,4	332,8	306,3	304,3	374,4	0,19	80,27	81,49	81,02	0,18	80,92	82,15	80,78
257,0	443,0	0,9	0,7	3,7	224,7	77,2	90,3	272,7	332,5	305,8	303,9	374,0	0,19	80,24	81,48	80,95	0,18	80,90	82,13	80,78
258,0	444,0	0,9	0,7	3,7	224,7	77,1	90,3	272,2	332,2	305,3	303,6	373,7	0,19	80,23	81,46	80,93	0,18	80,92	82,12	80,75
259,0	445,0	0,9	0,7	3,8	224,6	77,0	90,2	271,9	331,8	304,8	303,3	373,2	0,19	80,20	81,43	80,91	0,18	80,89	82,10	80,72
260,0	446,0	0,9	0,7	3,7	224,3	76,9	90,1	271,6	331,4	304,4	303,1	372,9	0,19	80,17	81,43	80,88	0,18	80,85	82,08	80,69
261,0	447,0	0,9	0,7	3,8	224,1	77,1	90,0	271,2	331,4	303,9	302,8	372,7	0,19	80,14	81,39	80,86	0,18	80,86	82,06	80,65
262,0	448,0	0,9	0,6	3,7	224,3	77,1	90,0	271,5	330,7	303,5	302,7	372,3	0,19	80,15	81,37	80,84	0,18	80,84	82,07	80,62
263,0	449,0	0,9	0,6	3,7	224,4	77,1	89,8	270,7	330,4	303,2	302,4	372,1	0,19	80,12	81,36	80,81	0,18	80,84	82,02	80,61
264,0	450,0	0,8	0,6	3,7	224,4	77,1	90,1	270,3	330,3	302,7	302,2	371,9	0,19	80,09	81,32	80,78	0,18	80,84	82,01	80,62
265,0	451,0	0,8	0,6	3,7	224,2	77,1	89,9	270,0	330,2	302,4	302,0	371,7	0,19	80,03	81,32	80,77	0,18	80,77	81,99	80,58
266,0	452,0	0,8	0,6	3,7	223,8	77,1	89,9	270,6	329,9	301,9	301,8	371,6	0,19	80,04	81,30	80,75	0,18	80,75	81,98	80,54
267,0	453,0	0,8	0,6	3,7	223,8	77,0	90,0	270,3	329,5	301,6	301,6	371,5	0,19	79,99	81,27	80,72	0,18	80,70	81,94	80,53
268,0	454,0	0,8	0,6	3,7	223,7	76,8	89,9	269,7	329,4	301,2	301,5	371,3	0,19	79,97	81,24	80,71	0,18	80,70	81,93	80,53
269,0	455,0	0,8	0,6	3,7	223,2	76,8	89,9	269,6	329,2	300,8	301,3	371,1	0,19	79,96	81,23	80,69	0,18	80,66	81,91	80,49
270,0	456,0	0,8	0,6	3,6	223,3	76,9	89,8	269,5	328,7	300,3	301,1	371,0	0,19	79,91	81,22	80,66	0,18	80,64	81,89	80,50
271,0	457,0	0,8	0,6	3,6	222,8	76,9	89,7	269,2	328,5	300,0	301,0	370,9	0,19	79,92	81,20	80,63	0,18	80,62	81,88	80,45
272,0	458,0	0,7	0,6	3,6	222,6	76,7	89,5	269,0	328,3	299,8	300,8	370,9	0,19	79,85	81,15	80,62	0,18	80,57	81,84	80,41
273,0	459,0	0,7	0,6	3,6	222,0	76,9	89,7	268,7	328,0	299,5	300,5	370,9	0,19	79,85	81,15	80,59	0,18	80,56	81,82	80,39
274,0	460,0	0,7	0,6	3,6	222,1	77,0	89,5	268,7	327,4	298,9	300,3	370,7	0,19	79,85	81,14	80,57	0,18	80,53	81,81	80,39
275,0	461,0	0,7	0,6	3,6	222,2	77,1	89,7	268,3	327,5	298,6	300,0	370,7	0,19	79,85	81,12	80,55	0,18	80,52	81,78	80,35
276,0	462,0	0,7	0,6	3,6	221,7	76,8	89,5	267,6	327,1	298,3	299,8	370,6	0,19	79,82	81,10	80,50	0,18	80,51	81,78	80,31
277,0	463,0	0,7	0,6	3,6	221,5	76,9	89,5	267,8	326,5	297,7	299,5	370,5	0,19	79,81	81,10	80,47	0,18	80,50	81,76	80,29
278,0	464,0	0,7	0,6	3,6	221,1	76,8	89,5	267,4	326,4	297,4	299,3	370,4	0,19	79,75	81,06	80,47	0,18	80,44	81,72	80,25
279,0	465,0	0,7	0,6	3,6	220,6	76,9	89,6	267,8	326,0	296,9	299,0	370,3	0,19	79,76	81,04	80,46	0,18	80,44	81,72	80,23
280,0	466,0	0,6	0,6	3,6	221,0	76,8	89,4	267,4	325,7	296,7	298,8	370,1	0,19	79,74	81,02	80,43	0,18	80,41	81,71	80,22
281,0	467,0	0,6	0,6	3,6	221,0	76,8	89,5	266,8	325,3	296,3	298,5	369,9	0,19	79,75	81,00	80,40	0,18	80,42	81,69	80,21
282,0	468,0	0,6	0,6	3,6	220,6	76,9	89,5	266,5	324,9	296,0	298,2	369,8	0,19	79,74	81,00	80,39	0,18	80,39	81,67	80,20
283,0	469,0	0,6	0,6	3,6	220,5	76,7	89,5	265,9	324,6	295,9	297,9	369,7	0,19	79,75	80,99	80,36	0,18	80,44	81,64	80,18
284,0	470,0	0,6	0,6	3,6	220,4	76,7	89,4	265,7	324,3	295,4	297,5	369,6	0,19	79,75	80,99	80,37	0,18	80,47	81,65	80,18
285,0	471,0	0,6	0,6	3,6	220,4	76,7	89,3	265,5	324,0	295,1	297,2	369,4	0,19	79,72	80,97	80,36	0,18	80,41	81,62	80,15
286,0	472,0	0,6	0,6	3,6	220,2	76,7	89,3	265,0	323,7	294,7	296,9	369,3	0,19	79,70	80,97	80,33	0,18	80,41	81,62	80,12
287,0	473,0	0,6	0,6	3,6	219,7	76,7	89,4	264,3	323,3	294,3	296,6	369,1	0,19	79,71	80,94	80,28	0,18	80,40	81,59	80,10
288,0	474,0	0,6	0,6	3,6	219,6	76,8	89,3	264,9	323,2	294,0	296,3	369,0	0,19	79,71	80,92	80,29	0,18	80,36	81,59	80,08
289,0	475,0	0,5	0,6	3,6	219,4	76,8	89,3	264,7	322,9	293,8	296,0	368,9	0,19	79,71	80,91	80,26	0,18	80,40	81,56	80,04
290,0	476,0	0,5	0,6	3,6	219,7	76,9	89,2	264,5	322,6	293,4	295,7	368,8	0,19	79,69	80,91	80,23	0,18	80,40	81,56	80,04
291,0	477,0	0,5	0,6	3,6	219,8	76,9	89,2	264,8	322,4	293,1	295,4	368,7	0,19	79,68	80,87	80,23	0,18	80,41	81,54	80,03
292,0	478,0	0,5	0,6	3,6	219,7	76,8	89,0	264,8	322,1	292,9	295,2	368,5	0,19	79,65	80,87	80,22	0,18	80,40	81,54	80,02
293,0	479,0	0,5	0,6	3,6	219,8	76,8	89,1	264,7	321,7	292,6	294,9	368,4	0,19	79,65	80,86	80,20	0,18	80,42	81,51	80,08
294,0	480,0	0,5	0,6	3,6	219,7	76,7	89,1	264,3	321,6	292,4	294,6	368,3	0,19	79,68	80,85	80,17	0,18	80,41	81,51	80,07
295,0	481,0	0,5	0,6	3,6	219,9	76,5	88,9	264,2	320,6	292,2	294,2	368,1	0,19	79,70	80,84	81,20	0,18	80,39	81,51	80,62
296,0	482,0	0,5	0,6	3,6	219,6	76,6	88,7	264,3	320,6	291,9	293,9	368,1	0,19	79,68	80,82	82,13	0,18	80,38	81,48	82,65
297,0	483,0	0,4	0,6	3,6	219,3	76,9	88,8	264,3	320,0	291,5	293,7	367,9	0,19	79,74	80,83	83,22	0,18	80,36	81,46	83,73
298,0	484,0	0,4	0,6	3,6	219,6	76,4	88,8	264,1	320,1	291,6	293,4	367,8	0,19	79,74	80,79	83,81	0,18	80,36	81,43	84,63
299,0	485,0	0,4	0,6	3,6	219,0	76,5	88,9	264,2	320,0	291,5	293,0	367,7	0,19	79,72	80,78	83,74	0,18	80,37	81,42	84,56
300,0	486,0	0,4	0,6	3,6	219,1	76,5	88,9	263,9	319,9	291,5	292,7	367,6	0,19	79,70	80,77	83,55	0,18	80,36	81,42	84,42
301,0	487,0	0,4	0,6	3,6	219,6	76,6	89,0	264,1	319,9	291,4	292,4	367,6	0,19	79,67	80,76	83,39	0,18	80,32	81,40	84,30
302,0	488,0	0,4	0,6	3,7	219,8	76,5	89,1	264,1	319,4	291,2	292,1	367,6	0,19	79,60	80,74	83,20	0,18	80,28	81,40	84,14
303,0	489,0	0,4	0,6	3,7	220,2	76,7	89,1	262,9	319,3	291,3	291,9	367,3	0,19	79,56	80,74	83,01	0,18	80,25	81,37	83,94
304,0	490,0	0,4	0,6	3,7	220,2	76,6	88,9	263,9	318,9	290,8	291,8	367,3	0,19	79,52	80,71	82,81	0,18	80,22	81,37	83,75
305,0	491,0	0,3	0,6	3,7	220,1	76,7	89,1	263,3	318,8	290,9	291,6	367,2	0,19	79,51	80,71	82,64	0,18	80,24	81,36	83,57
306,0	492,0	0,3	0,6	3,7	220,2	76,6	89,0	263,9	318,4	290,7	291,5	367,1	0,19	79,54	80,68	82,51	0,18	80,24	81,35	83,44
307,0	493,0	0,3	0,6	3,6	220,0	76,5	89,2	263,7	318,4	290,4	291,4	367,1	0,19	79,53	80,68	82,35	0,18	80,24	81,33	83,27
308,0	494,0	0,3	0,6	3,6	219,8	76,7	89,1	263,7	318,2	290,1	291,2	367,0	0,19	79,51	80,65	82,18	0,18	80,24	81,33	83,10
309,0	495,0	0,3	0,6	3,6	220,1	76,6	88,9	263,4	318,1	290,1	291,2	366,9	0,19	79,51	80,63	82,08	0,18	80,21	81,32	82,91
310,0	496,0	0,3	0,6	3,6	219,7	76,7	89,0	263,8	317,5	290,1	291,1	366,8	0,19	79,51	80,62	81,98	0,18	80,20	81,30	82,80
311,0	497,0	0,3	0,6	3,6	219,6	76,7	89,1	263,6	317,3	289,8	291,0	366,7	0,19	79,48	80,61	81,84	0,18	80,14	81,27	82,64
312,0	498,0	0,3	0,6	3,5	219,3	76,9	89,1	262,7	317,4	289,9	290,9	366,6	0,19	79,46	80,60	81,72	0,18	80,12	81,27	82,49
313,0	499,0	0,2	0,6	3,5	218,6	76,8	88,9	262,5	317,0	289,6	290,7	366,4	0,19	79,44	80,60	81,60	0,18	80,10	81,26	82,38
314,0	500,0	0,2	0,6	3,5	218,1	76,8	89,1	262,6	317,1	289,5	290,5	366,3	0,19	79,42	80,57	81,51	0,18	80,10	81,23	82,25
315,0	501,0	0,2	0,6	3,5	217,8	76,6	89,0	262,4	316,9	289,2	290,3	366,3	0,19	79,46	80,56	81,42	0,18	80,12	81,20	82,12
316,0	502,0	0,2	0,6	3,5	217,6	76,7	88,7	262,2	316,7	289,1	290,0	366,1	0,19	79,44	80,55	81,35	0,18	80,09	81,20	81,97
317,0	503,0	0,2	0,6	3,4	217,4	76,5	88,8	261,7	316,4	288,7	289,8	366,1	0,19	79,44	80,52	81,23	0,18	80,07	81,18	81,87
318,0	504,0	0,2	0,6	3,4	217,2	76,7	88,7	261,3	316,4	288,6	289,5	365,9	0,19	79,47	80,52	81,19	0,18	80,07	81,17	81,75
319,0	505,0	0,2	0,6	3,4	216,5	76,8	88,8	261,1	315,9	288,3	289,2	365,8	0,19	79,43	80,49	81,09	0,18	80,05	81,16	81,67
320,0	506,0	0,2	0,6	3,4	216,3	76,4	88,8	260,9	316,0	288,0	288,8	365,6	0,19	79,40	80,48	81,03	0,18	80,07	81,12	81,53
321,0	507,0	0,2	0,6	3,4	216,0	76,3	88,9	260,1	315,8	287,7	288,5	365,4	0,19	79,41	80,48	80,95	0,18	80,06	81,12	81,44
322,0	508,0	0,1	0,5	3,4	215,7	76,4	88,7	262,2	315,2	287,5	288,1	365,1	0,19	79,38	80,46	80,88	0,18	80,01	81,11	81,33
323,0	509,0	0,1	0,5	3,4	215,2	76,5	88,7	260,7	315,4	287,3	287,7	364,9	0,19	79,50	80,44	80,81	0,18	80,05	81,10	81,26
324,0	510,0	0,1	0,5	3,4	215,0	76,7	88,6	260,4	315,3	286,9	287,3	364,8	0,19	79,55	80,43	80,77	0,18	80,07	81,10	81,20
325,0	511,0	0,1	0,5	3,4	214,8	76,4	88,3	259,9	314,9	286,6	286,9	364,6	0,19	79,55	80,42	80,68	0,18	80,06	81,07	81,10
326,0	512,0	0,1	0,5	3,4	214,4	76,3	88,1	259,5	314,6	286,4	286,5	364,5	0,19	79,49	80,40	80,61	0,18	80,00	81,06	81,01
327,0	513,0	0,1	0,5	3,3	213,8	76,4	88,2	259,0	314,3	285,7	286,0	364,3	0,19	79,48	80,41	82,72	0,18	80,00	81,05	81,75
328,0	514,0	0,1	0,5	3,3	213,7	76,2	88,4	258,2	314,1	285,5	285,6	364,0	0,19	79,48	80,40	83,08	0,18	79,99	81,02	81,93
329,0	515,0	0,1	0,5	3,2	212,8	76,3	88,3	258,0	314,1	284,9	285,2	363,8	0,19	79,41	80,37	82,96	0,18	79,98	81,01	81,86
330,0	516,0	0,1	0,5	3,2	212,8	76,5	88,3	257,2	313,8	284,5	284,7	363,6	0,19	79,40	80,37	82,80	0,18	79,98	81,01	81,78
331,0	517,0	0,0	0,5	3,2	212,1	76,4	88,2	256,4	313,2	283,9	284,3	363,4	0,19	79,39	80,36	82,62	0,18	79,96	81,00	81,69

Manufacturer: WOLFSTEEL
Model: 2100

Run: 2
Project #: PI 20184
Test Duration: 331 min

	HHV	LHV
Eff	70,70%	76,07%
Comb Eff	96,22%	96,22%
HT Eff	73,48%	79,06%
Output	16 128	kJ/h
Burn Rate	1,13	kg/h
Grams CO	367	g
Input	22 812	kJ/h
MC wet	18,82	

Note: In the “Input data”, "Calc. % O_2", "Fuel Properties", and “Mass Balance” columns, [e], [d], [g], [a]. [b], [c], [h], [u], [w], [j], and [k] refer to their respective variables in Clauses 13.7.3

	Ultimate CO_2
$CO_{2\text{-}ult}$	19,86
	F_0
	1,048

Overall Heating Efficiency:	70,70%	Heat Output:	15 299 Btu/h	16 128 kJ/h
Combustion Efficiency:	96,22%	Heat Input:	21 640 Btu/h	22 812 kJ/h
Heat Transfer Efficiency:	73,48%	Burn Duration:	5,50 h	
		Burn Rate:	2,49 lb/h	1,129 kg/h
		Stack Temp:	317,0 Deg. F	158,3 Deg. C

Air Fuel Ratio (A/F)	
Dry Molecular Weight (M_d)	29,54
Dry Moles Exhaust Gas (N_r):	539,28
Air Fuel Ratio (A/F)	15,42

APPENDIX 2: Proportionality results

Average	Average	Average	Proportional	Highfire				Average
16,39	Inlet +	Inlet +						0,242
	Outlet	Outlet	Average	Average	#1	#2		
Tunnel	Temp.	Temp.	98,90	100,77	System 1	System 2		SQRT
Velocity	Meter 1	Meter 2	**Proportional Rates**		Vol.Std.	Vol.Std.		Delta-P
			PR1	**PR2**			Time	
Ft/Sec	Deg. R	Deg. R	**%**	**%**	(ft3)	(ft3)	min	(in H2O)2
15,739	536,4	537,0			0,187	0,179	0	0,244545
15,750	536,4	537,0	93,66	95,16	0,187	0,179	1	0,2443195
15,892	536,3	536,9	93,90	95,42	0,187	0,179	2	0,244977
15,824	536,2	536,9	94,45	96,09	0,187	0,179	3	0,2439041
15,675	536,1	536,8	96,16	97,71	0,188	0,179	4	0,2407634
15,961	536,1	536,8	95,64	97,32	0,188	0,179	5	0,2432785
15,832	536,1	536,8	97,68	99,34	0,187	0,179	6	0,239919
15,946	536,1	536,8	98,45	99,94	0,188	0,179	7	0,239919
16,101	536,1	536,8	99,49	100,98	0,188	0,179	8	0,2399198
16,053	536,2	536,9	100,81	102,61	0,188	0,179	9	0,2377956
16,068	536,3	536,9	102,19	104,03	0,188	0,179	10	0,2362983
16,173	536,4	536,9	102,42	104,36	0,188	0,179	11	0,2367263
16,145	536,5	537,0	103,17	105,04	0,187	0,179	12	0,2356529
16,266	536,6	537,1	102,73	104,61	0,187	0,179	13	0,2367262
16,299	536,8	537,2	103,23	104,99	0,187	0,179	14	0,2367269
16,562	537,1	537,4	102,08	103,92	0,187	0,179	15	0,239919
17,573	537,5	537,6	107,94	110,02	0,187	0,179	16	0,239919
17,367	538,0	538,0	106,94	108,93	0,187	0,179	17	0,2399198
16,698	538,4	538,3	104,59	106,50	0,187	0,179	18	0,2377956
16,594	538,7	538,5	103,32	105,29	0,187	0,179	19	0,2382224
16,524	539,1	538,8	102,80	104,58	0,187	0,178	20	0,2382227
16,525	539,3	539,1	101,79	103,93	0,186	0,178	21	0,239285
16,511	539,5	539,3	101,35	102,99	0,186	0,178	22	0,2399209
16,506	539,7	539,5	100,75	102,72	0,186	0,178	23	0,2403438
16,458	539,8	539,6	100,87	102,88	0,186	0,178	24	0,2399212
16,498	539,8	539,7	100,46	102,25	0,186	0,178	25	0,2407658
16,445	539,9	539,8	100,91	102,84	0,187	0,178	26	0,2399476
16,586	540,1	540,0	100,09	101,86	0,186	0,178	27	0,2418172
16,559	540,1	540,0	100,14	102,02	0,186	0,178	28	0,2413975
16,598	540,2	540,1	100,01	101,95	0,186	0,178	29	0,2418169
16,499	540,3	540,2	100,65	102,65	0,186	0,178	30	0,2403447
16,572	540,4	540,3	100,36	102,09	0,186	0,178	31	0,2413978
16,364	540,4	540,3	101,60	103,37	0,186	0,178	32	0,2382246
16,685	540,4	540,4	99,69	101,71	0,186	0,178	33	0,2428642
16,711	540,6	540,5	99,50	101,29	0,186	0,178	34	0,2432821
16,621	540,7	540,6	100,21	102,07	0,186	0,178	35	0,2418174
16,520	540,8	540,7	100,73	102,49	0,186	0,178	36	0,2403476
16,593	541,0	540,7	100,24	102,07	0,186	0,178	37	0,241398
16,610	541,0	540,8	99,86	101,82	0,186	0,178	38	0,2418183
16,430	541,2	540,9	101,07	102,98	0,186	0,178	39	0,2392877
16,433	541,3	541,0	101,02	102,97	0,186	0,178	40	0,239288
16,497	541,4	541,1	100,39	102,34	0,186	0,178	41	0,2403464
16,562	541,5	541,2	99,93	101,90	0,186	0,178	42	0,2413992
16,453	541,6	541,2	100,48	102,44	0,186	0,178	43	0,239923
16,501	541,6	541,3	100,17	102,02	0,186	0,178	44	0,2407678
16,494	541,6	541,3	100,14	101,91	0,186	0,178	45	0,2407679
16,389	541,6	541,3	100,77	102,63	0,186	0,178	46	0,2392886
16,478	541,7	541,4	100,06	101,95	0,186	0,178	47	0,240768
16,509	541,7	541,5	99,70	101,61	0,186	0,178	48	0,2413997
16,400	541,7	541,5	100,16	102,12	0,186	0,178	49	0,2399108
16,487	541,7	541,5	99,54	101,45	0,186	0,178	50	0,2413997
16,511	541,8	541,6	99,33	101,07	0,186	0,178	51	0,2418192
16,374	541,9	541,6	99,97	102,04	0,186	0,178	52	0,2399245
16,411	541,9	541,6	99,93	101,84	0,186	0,178	53	0,240347

16,399	541,9	541,6	99,86	101,93	0,186	0,178	54	0,2403471
16,390	542,0	541,7	99,77	101,60	0,186	0,178	55	0,2403464
16,482	542,0	541,7	98,97	100,80	0,186	0,178	56	0,2418201
16,477	542,0	541,7	98,97	100,98	0,186	0,178	57	0,2418196
16,354	542,0	541,7	99,46	101,33	0,186	0,178	58	0,2403477
16,368	542,0	541,7	99,12	101,14	0,185	0,178	59	0,2407673
16,383	542,1	541,8	98,85	100,82	0,186	0,178	60	0,2413981
16,219	542,3	541,9	99,51	101,45	0,186	0,178	61	0,2392893
16,264	542,3	541,9	98,97	100,77	0,186	0,178	62	0,2404002
16,450	542,4	542,0	97,56	99,68	0,186	0,178	63	0,2432845
16,311	542,6	542,1	98,21	100,12	0,185	0,178	64	0,2414013
16,422	542,9	542,4	97,38	99,39	0,185	0,178	65	0,2432522
16,242	543,2	542,6	98,32	100,05	0,185	0,177	66	0,2407702
16,276	543,4	542,8	97,76	99,59	0,185	0,177	67	0,241524
16,391	543,6	543,0	97,04	98,88	0,185	0,177	68	0,2432862
16,387	543,9	543,2	96,96	99,07	0,185	0,177	69	0,2432863
16,419	544,1	543,4	96,62	98,64	0,185	0,177	70	0,2439469
16,391	544,4	543,6	96,51	98,35	0,185	0,177	71	0,2439116
16,334	544,6	543,8	96,48	98,49	0,185	0,177	72	0,2432863
16,494	544,7	544,0	95,46	97,39	0,185	0,177	73	0,245777
16,525	544,8	544,1	95,10	97,21	0,185	0,177	74	0,2463962
16,378	545,0	544,3	95,78	97,77	0,184	0,177	75	0,2443282
16,409	545,1	544,4	95,52	97,39	0,184	0,177	76	0,2449505
16,409	545,2	544,5	95,59	97,40	0,185	0,177	77	0,2449507
16,443	545,3	544,7	95,05	96,85	0,185	0,177	78	0,2457777
16,342	545,4	544,8	95,61	97,70	0,184	0,177	79	0,2443292
16,301	545,5	544,9	95,72	97,55	0,184	0,177	80	0,2439146
16,324	545,6	545,0	95,43	97,29	0,184	0,177	81	0,2443299
16,128	545,7	545,1	96,65	98,43	0,184	0,176	82	0,2414063
16,408	545,7	545,2	94,73	96,69	0,184	0,177	83	0,2457798
16,304	545,8	545,3	95,21	97,17	0,184	0,177	84	0,2443302
16,499	545,8	545,3	93,92	95,86	0,184	0,176	85	0,2474264
16,273	546,0	545,5	95,07	96,92	0,184	0,176	86	0,2443312
16,241	546,1	545,6	94,90	96,69	0,184	0,176	87	0,2443315
16,427	546,0	545,6	93,36	95,47	0,184	0,176	88	0,2474264
16,300	545,9	545,6	94,13	95,71	0,184	0,176	89	0,2457806
16,388	545,7	545,5	93,51	95,31	0,184	0,176	90	0,2474262

Average	Average	Average	Proportional Rates Medium/low fire					Average
15,99	Inlet +	Inlet +						0,250
	Outlet	Outlet	Average	Average	#1	#2		
Tunnel	Temp.	Temp.	99,33	100,48	System 1	System 2		SQRT
Velocity	Meter 1	Meter 2	**Proportional Rates**		Vol.Std.	Vol.Std.		Delta-P
			PR1	**PR2**			Time	
Ft/Sec	Deg. R	Deg. R	**%**	**%**	(ft3)	(ft3)	min	(in H2O)2
16,588	541,7	542,5			0,185	0,173	0	0,2468078
16,466	541,6	542,4	104,80	105,90	0,186	0,173	1	0,2468077
16,662	541,7	542,4	105,27	106,43	0,185	0,174	2	0,2474237
16,844	541,7	542,4	105,58	106,93	0,185	0,174	3	0,2484468
16,860	541,7	542,3	106,57	107,90	0,185	0,174	4	0,2474233
16,988	541,7	542,3	106,42	107,73	0,185	0,174	5	0,2484468
16,788	541,8	542,3	108,18	109,66	0,185	0,174	6	0,24495
17,115	542,0	542,4	106,87	108,12	0,185	0,174	7	0,2488547
17,087	542,2	542,5	107,50	108,76	0,185	0,173	8	0,2478334
17,115	542,5	542,7	107,59	108,88	0,185	0,173	9	0,2478335
17,145	542,8	542,9	107,85	109,01	0,185	0,173	10	0,2478334
17,106	543,1	543,1	108,37	109,78	0,185	0,173	11	0,2468071
17,144	543,4	543,3	107,15	108,50	0,185	0,173	12	0,2483894
16,868	543,6	543,5	106,27	107,65	0,185	0,173	13	0,2474242
16,582	543,8	543,6	105,34	106,83	0,185	0,173	14	0,2463957
16,260	543,9	543,7	105,39	106,61	0,185	0,173	15	0,2439131
16,233	543,9	543,7	104,37	105,81	0,185	0,173	16	0,2449513
16,119	543,7	543,6	104,17	105,48	0,185	0,173	17	0,2443287
16,207	543,6	543,6	103,02	104,32	0,185	0,173	18	0,246397
16,231	543,5	543,5	102,24	103,70	0,185	0,173	19	0,2474239
16,147	543,4	543,4	102,37	103,56	0,185	0,173	20	0,2468078
16,120	543,3	543,4	102,09	103,25	0,185	0,173	21	0,2468077
16,141	543,2	543,3	101,70	103,13	0,185	0,173	22	0,2474237
16,191	543,1	543,3	101,46	102,52	0,185	0,173	23	0,2484468
16,111	543,0	543,2	101,63	102,81	0,185	0,173	24	0,2474233
16,166	542,9	543,2	101,11	102,47	0,185	0,173	25	0,2484468
15,926	542,8	543,1	102,39	103,71	0,185	0,173	26	0,24495
16,175	542,7	543,1	100,78	102,00	0,185	0,173	27	0,2488547
16,100	542,6	543,0	101,16	102,30	0,185	0,173	28	0,2478334
16,103	542,6	542,9	101,35	102,50	0,185	0,173	29	0,2478335
16,104	542,4	542,9	101,35	102,21	0,185	0,173	30	0,2478334
16,032	542,3	542,8	101,67	102,71	0,185	0,173	31	0,2468071
16,140	542,2	542,7	101,24	102,29	0,185	0,173	32	0,2483894
16,087	542,2	542,6	101,75	102,68	0,185	0,173	33	0,2474242
16,018	542,1	542,5	101,96	103,29	0,185	0,173	34	0,2463957
15,981	542,1	542,5	102,38	103,54	0,185	0,174	35	0,245776
16,110	542,1	542,5	101,49	102,58	0,185	0,173	36	0,2478325
16,078	542,1	542,5	101,53	102,90	0,185	0,174	37	0,2474218
16,004	542,2	542,5	101,81	103,21	0,185	0,174	38	0,2463948
16,146	542,2	542,5	101,26	102,33	0,185	0,174	39	0,2484453
16,089	542,4	542,5	101,68	102,98	0,185	0,174	40	0,2474218
16,034	542,5	542,6	102,00	103,37	0,185	0,174	41	0,2463954
16,180	542,6	542,7	101,23	102,59	0,185	0,174	42	0,2483957
16,125	542,8	542,8	101,94	102,96	0,185	0,173	43	0,2474228
16,137	542,9	543,0	101,57	102,78	0,185	0,173	44	0,2478332
16,100	543,0	543,1	101,72	102,68	0,185	0,173	45	0,2474225
16,023	543,1	543,1	102,04	103,23	0,185	0,173	46	0,2463965
16,152	543,1	543,1	101,18	102,19	0,185	0,173	47	0,2484464
16,107	543,0	543,1	101,32	102,55	0,185	0,173	48	0,2478332
16,168	542,9	543,1	100,75	102,16	0,185	0,173	49	0,2488551
16,064	542,8	543,1	101,43	102,41	0,185	0,173	50	0,2474235
16,159	542,7	543,0	100,83	102,19	0,185	0,173	51	0,248855
16,159	542,6	543,0	101,04	101,90	0,185	0,173	52	0,2488548
16,089	542,5	542,9	101,24	102,37	0,185	0,173	53	0,2478328
16,083	542,3	542,8	101,08	102,26	0,185	0,173	54	0,247833

16,059	542,2	542,7	101,36	102,63	0,185	0,173	55	0,2474218
16,151	542,1	542,6	100,93	102,14	0,185	0,174	56	0,2488543
16,150	542,0	542,5	100,89	102,03	0,185	0,174	57	0,2488545
16,059	541,9	542,5	101,43	102,57	0,185	0,173	58	0,2474223
16,134	541,9	542,5	100,88	102,15	0,185	0,174	59	0,2486698
16,099	541,8	542,4	100,80	102,34	0,185	0,174	60	0,2484455
16,123	541,7	542,3	100,64	101,94	0,185	0,174	61	0,2488539
16,028	541,6	542,2	101,35	102,57	0,185	0,174	62	0,2474224
16,083	541,5	542,1	100,90	101,93	0,185	0,174	63	0,2484453
16,041	541,4	542,0	101,16	102,35	0,186	0,174	64	0,2478317
16,039	541,3	541,9	101,11	102,20	0,186	0,174	65	0,2478323
16,068	541,2	541,8	100,81	102,07	0,186	0,174	66	0,2484454
16,055	541,2	541,7	100,71	101,88	0,185	0,174	67	0,248445
16,002	541,1	541,6	100,90	102,20	0,186	0,174	68	0,2478318
16,055	541,0	541,5	100,58	101,79	0,186	0,174	69	0,2488531
15,984	540,9	541,5	100,67	101,69	0,186	0,174	70	0,2478918
16,027	540,9	541,4	100,30	101,39	0,186	0,174	71	0,2488531
16,096	540,9	541,4	99,80	101,12	0,186	0,174	72	0,2498699
15,898	541,0	541,4	101,16	102,35	0,186	0,174	73	0,2468053
15,948	541,2	541,5	100,97	102,15	0,186	0,174	74	0,2474206
16,050	541,4	541,7	100,46	101,53	0,186	0,174	75	0,2488526
16,062	541,6	541,8	100,40	101,65	0,186	0,174	76	0,2488524
15,980	541,8	542,0	100,95	102,18	0,185	0,174	77	0,2474212
16,084	542,0	542,1	100,01	101,44	0,185	0,174	78	0,2492303
16,040	542,1	542,2	100,12	101,47	0,185	0,174	79	0,2488531
16,116	542,2	542,3	99,44	100,67	0,185	0,174	80	0,2502762
15,947	542,2	542,3	100,34	101,62	0,185	0,174	81	0,2478316
16,026	542,2	542,3	99,68	100,85	0,185	0,173	82	0,2492602
16,013	542,1	542,3	99,66	101,05	0,185	0,174	83	0,2492606
16,070	542,0	542,2	99,19	100,54	0,185	0,174	84	0,250277
15,970	541,8	542,2	99,72	101,03	0,185	0,174	85	0,2488529
15,966	541,7	542,1	99,60	100,61	0,185	0,173	86	0,2488533
15,980	541,6	542,1	99,57	100,65	0,185	0,173	87	0,2492604
16,014	541,5	542,0	99,33	100,38	0,185	0,174	88	0,2498702
16,031	541,4	541,9	99,04	100,34	0,185	0,174	89	0,2502771
16,064	541,3	541,8	98,90	100,02	0,186	0,174	90	0,2508835
15,946	541,2	541,8	99,29	100,61	0,185	0,174	91	0,249261
15,980	541,1	541,7	99,24	100,22	0,186	0,174	92	0,2498577
16,092	541,0	541,6	98,34	99,45	0,186	0,174	93	0,2516906
15,964	540,8	541,5	99,06	100,23	0,186	0,174	94	0,2498693
15,934	540,7	541,4	99,20	100,49	0,186	0,174	95	0,2495062
15,759	540,6	541,4	100,25	101,51	0,186	0,174	96	0,2468048
15,818	540,5	541,3	99,76	101,06	0,186	0,174	97	0,2478313
16,009	540,3	541,1	98,78	99,56	0,186	0,174	98	0,2508828
15,965	540,2	541,0	98,82	99,85	0,186	0,174	99	0,2502757
15,896	540,2	541,0	99,25	100,40	0,186	0,174	100	0,2492691
15,895	540,2	540,9	99,24	100,46	0,186	0,174	101	0,2492591
15,931	540,1	540,8	99,20	100,28	0,186	0,174	102	0,2498694
15,925	540,0	540,7	98,99	100,02	0,186	0,174	103	0,2498694
15,881	539,8	540,6	99,27	100,27	0,186	0,174	104	0,2492593
15,921	539,7	540,6	98,99	100,21	0,186	0,174	105	0,2498693
15,850	539,6	540,4	99,28	100,54	0,186	0,174	106	0,2488518
16,029	539,5	540,3	98,37	99,50	0,186	0,174	107	0,2516895
15,931	539,4	540,2	98,81	99,75	0,186	0,174	108	0,2502753
16,091	539,4	540,2	97,85	99,02	0,186	0,174	109	0,2526965
16,052	539,5	540,2	98,39	99,32	0,186	0,174	110	0,2516894
15,978	539,7	540,3	99,01	100,08	0,186	0,174	111	0,2502744
15,974	539,8	540,3	99,24	100,39	0,186	0,174	112	0,2499217
15,956	540,0	540,4	99,74	100,95	0,186	0,174	113	0,2492585
15,967	540,1	540,5	99,63	101,01	0,186	0,174	114	0,2492584
16,088	540,2	540,7	98,38	99,73	0,186	0,174	115	0,2516885
16,079	540,3	540,7	98,54	99,68	0,186	0,174	116	0,2516898

15,912	540,3	540,7	99,29	100,69	0,186	0,174	117	0,2492583
15,968	540,3	540,8	98,71	99,84	0,186	0,174	118	0,2502752
15,959	540,2	540,8	98,84	99,88	0,186	0,174	119	0,2502745
15,985	540,2	540,7	98,58	99,68	0,186	0,174	120	0,2508823
15,869	540,0	540,7	99,28	100,45	0,186	0,174	121	0,2491699
15,867	539,9	540,6	99,11	100,33	0,186	0,174	122	0,2492591
16,114	539,8	540,5	97,47	98,54	0,186	0,174	123	0,2532975
15,891	539,7	540,4	98,67	99,93	0,186	0,174	124	0,2498686
15,902	539,6	540,3	98,89	99,64	0,186	0,174	125	0,250038
15,907	539,4	540,2	98,67	99,76	0,186	0,174	126	0,2502748
15,992	539,4	540,1	98,05	99,10	0,186	0,174	127	0,2516894
15,987	539,3	540,1	97,94	99,20	0,186	0,174	128	0,2516896
15,930	539,1	539,9	98,26	99,43	0,186	0,174	129	0,2508824
16,016	539,0	539,8	97,74	98,79	0,186	0,174	130	0,2522933
15,921	538,9	539,7	98,34	99,51	0,186	0,174	131	0,2508816
15,881	538,9	539,7	98,61	99,73	0,186	0,174	132	0,2502746
16,071	538,8	539,6	97,45	98,58	0,186	0,174	133	0,2532973
15,911	538,7	539,5	98,38	99,20	0,186	0,174	134	0,2508809
16,022	538,6	539,4	97,75	98,63	0,187	0,174	135	0,2526954
15,867	538,5	539,3	98,57	99,44	0,187	0,174	136	0,250274
16,019	538,5	539,3	97,48	98,76	0,186	0,174	137	0,2526956
15,991	538,4	539,2	97,75	99,00	0,186	0,175	138	0,2522925
16,094	538,4	539,2	97,29	98,31	0,186	0,175	139	0,2536972
15,873	538,6	539,2	98,99	100,20	0,186	0,175	140	0,2498672
15,861	538,8	539,3	99,34	100,37	0,186	0,175	141	0,2492578
16,045	539,0	539,5	98,32	99,57	0,186	0,174	142	0,2516881
16,012	539,2	539,6	98,77	100,17	0,186	0,174	143	0,2508809
15,964	539,4	539,8	99,35	100,39	0,186	0,174	144	0,2498675
16,043	539,6	539,9	99,12	100,18	0,186	0,174	145	0,2508806
15,897	539,8	540,1	100,13	101,45	0,186	0,174	146	0,2484424
16,065	539,9	540,2	99,07	100,14	0,186	0,174	147	0,2508811
15,973	540,1	540,4	99,74	100,92	0,186	0,174	148	0,2492583
16,016	540,3	540,5	99,48	100,79	0,186	0,174	149	0,2498678
16,140	540,4	540,7	98,81	100,13	0,186	0,174	150	0,2516891
16,030	540,6	540,8	99,64	100,76	0,186	0,174	151	0,2498682
16,102	540,7	541,0	99,18	100,64	0,186	0,174	152	0,2508823
16,003	540,8	541,1	99,75	100,89	0,186	0,174	153	0,2492587
16,164	541,0	541,3	98,84	100,00	0,185	0,174	154	0,2516892
15,986	541,2	541,4	100,07	101,36	0,186	0,174	155	0,2488522
16,054	541,3	541,6	99,55	100,68	0,186	0,174	156	0,249869
16,177	541,4	541,7	98,68	100,05	0,185	0,174	157	0,2516897
15,974	541,6	541,9	100,25	101,26	0,185	0,174	158	0,2484446
16,001	541,7	542,0	100,04	101,25	0,185	0,174	159	0,2488525
16,136	541,8	542,1	99,17	100,38	0,185	0,174	160	0,2508828
16,071	541,9	542,2	99,45	100,71	0,185	0,174	161	0,2498698
16,035	542,1	542,4	99,90	100,99	0,185	0,173	162	0,2492604
16,075	542,1	542,4	99,47	100,76	0,185	0,174	163	0,2498704
16,148	542,2	542,6	99,27	100,39	0,185	0,174	164	0,2508837
16,089	542,4	542,7	99,47	100,77	0,185	0,173	165	0,2498711
16,087	542,5	542,8	99,61	100,79	0,185	0,173	166	0,2498714
16,051	542,6	542,9	99,75	101,12	0,185	0,174	167	0,2492614
16,058	542,8	543,1	99,78	101,08	0,185	0,173	168	0,2492616
16,164	542,9	543,2	99,29	100,35	0,185	0,173	169	0,2508852
16,166	543,0	543,3	99,15	100,26	0,185	0,173	170	0,2508848
16,009	543,1	543,4	100,05	101,21	0,185	0,173	171	0,2484465
16,103	543,3	543,6	99,55	100,65	0,185	0,173	172	0,2498982
16,227	543,4	543,7	98,88	100,02	0,185	0,173	173	0,2516938
16,045	543,5	543,8	99,95	101,20	0,185	0,173	174	0,2488561
16,024	543,6	544,0	100,29	101,43	0,185	0,173	175	0,2484476
16,145	543,8	544,1	99,40	100,46	0,185	0,173	176	0,2502796
16,122	543,9	544,2	99,55	100,86	0,185	0,173	177	0,2498732
16,147	544,0	544,3	99,50	100,77	0,185	0,173	178	0,2502797

16,240	544,1	544,4	99,04	100,11	0,185	0,173	179	0,2516948
16,151	544,2	544,5	99,39	100,54	0,185	0,173	180	0,2502801
16,193	544,3	544,6	99,10	100,33	0,185	0,173	181	0,2508874
16,037	544,4	544,7	100,15	101,35	0,185	0,173	182	0,2484488
16,068	544,4	544,8	99,96	101,33	0,185	0,173	183	0,2488576
16,070	544,6	545,0	99,97	101,37	0,185	0,173	184	0,2488572
16,097	544,6	545,0	99,93	100,91	0,185	0,173	185	0,2492644
16,074	544,7	545,1	100,09	101,09	0,185	0,173	186	0,248858
16,068	544,8	545,2	99,98	101,19	0,185	0,173	187	0,2488582
16,007	544,9	545,3	99,95	101,28	0,185	0,173	188	0,2484496
15,933	544,9	545,3	100,08	101,25	0,185	0,173	189	0,2476609
15,827	544,7	545,2	100,51	101,59	0,185	0,173	190	0,2464
15,900	544,6	545,2	99,85	101,03	0,185	0,173	191	0,2478375
16,077	544,5	545,1	98,44	99,75	0,185	0,173	192	0,2508893
15,985	544,4	545,0	98,80	99,94	0,185	0,173	193	0,2498757
16,033	544,2	544,9	98,29	99,49	0,185	0,173	194	0,2508895
15,922	544,1	544,8	98,92	100,14	0,185	0,173	195	0,2492659
15,948	544,0	544,7	98,59	99,90	0,185	0,173	196	0,249876
15,933	543,9	544,7	98,63	99,60	0,185	0,173	197	0,2498756
15,925	543,8	544,5	98,64	99,79	0,185	0,173	198	0,2498758
15,846	543,7	544,4	99,15	100,32	0,185	0,173	199	0,2484496
15,902	543,6	544,4	99,05	100,31	0,185	0,173	200	0,2488585
15,998	543,6	544,4	98,95	100,28	0,185	0,173	201	0,2498757
15,931	543,7	544,4	99,73	100,75	0,185	0,173	202	0,24845
15,905	543,8	544,5	100,03	101,00	0,185	0,173	203	0,2478376
16,017	544,0	544,6	99,55	100,79	0,185	0,173	204	0,249266
16,013	544,1	544,7	99,40	100,50	0,185	0,173	205	0,2492657
15,871	544,2	544,7	99,95	101,39	0,185	0,173	206	0,2474272
15,921	544,2	544,7	99,59	100,61	0,185	0,173	207	0,2484504
15,920	544,1	544,7	99,18	100,36	0,185	0,173	208	0,248859
15,816	544,1	544,7	99,71	100,86	0,185	0,173	209	0,2474271
15,982	544,0	544,6	98,51	99,69	0,185	0,173	210	0,2502825
15,943	543,9	544,6	98,55	99,46	0,185	0,173	211	0,2498761
15,866	543,8	544,5	98,88	100,22	0,185	0,173	212	0,2488593
15,879	543,7	544,4	98,62	99,85	0,185	0,173	213	0,249266
15,871	543,6	544,4	98,69	99,83	0,185	0,173	214	0,2492654
15,965	543,5	544,3	97,92	98,99	0,185	0,173	215	0,250889
15,861	543,4	544,2	98,56	99,69	0,185	0,173	216	0,2492657
15,915	543,3	544,1	97,99	99,18	0,185	0,173	217	0,2502817
15,756	543,2	544,1	98,99	100,27	0,185	0,173	218	0,2478367
15,753	543,2	544,0	99,09	99,98	0,185	0,173	219	0,247837
15,839	543,1	543,9	98,47	99,70	0,185	0,173	220	0,2492679
15,837	543,0	543,9	98,48	99,69	0,185	0,173	221	0,249265
15,821	543,0	543,8	98,52	99,83	0,185	0,174	222	0,2490634
15,714	542,9	543,7	99,25	100,50	0,185	0,174	223	0,2474257
15,811	542,9	543,7	98,72	99,73	0,185	0,174	224	0,2489563
15,826	542,8	543,6	98,45	99,69	0,185	0,173	225	0,2492646
15,799	542,7	543,6	98,61	99,92	0,185	0,174	226	0,2488572
15,926	542,7	543,5	97,80	98,81	0,185	0,173	227	0,2508875
15,768	542,6	543,5	98,73	99,95	0,185	0,173	228	0,248449
15,860	542,6	543,4	98,29	99,43	0,185	0,174	229	0,249874
15,704	542,6	543,3	99,13	100,33	0,185	0,174	230	0,2474253
15,767	542,5	543,3	98,79	100,22	0,185	0,174	231	0,2484475
15,857	542,5	543,3	98,26	99,34	0,185	0,174	232	0,2498742
15,815	542,4	543,2	98,20	99,72	0,185	0,174	233	0,2492692
15,789	542,4	543,1	98,64	99,87	0,185	0,174	234	0,248857
15,786	542,3	543,1	98,63	99,51	0,185	0,173	235	0,2488562
15,915	542,3	543,1	97,75	99,19	0,185	0,174	236	0,2508868
15,784	542,2	543,0	98,57	99,65	0,185	0,174	237	0,2488561
15,782	542,2	543,0	98,61	99,87	0,185	0,174	238	0,248857
15,716	542,2	542,9	98,99	100,19	0,185	0,174	239	0,2478341
15,716	542,1	542,9	99,11	100,19	0,185	0,174	240	0,2478347

15,907	542,1	542,8	97,85	98,92	0,186	0,174	241	0,2508864
15,867	542,0	542,8	98,04	99,17	0,185	0,174	242	0,2502795
15,752	542,0	542,7	98,72	99,90	0,185	0,174	243	0,2484474
15,907	541,9	542,7	97,72	99,07	0,185	0,174	244	0,2508857
15,776	541,9	542,6	98,50	99,60	0,185	0,174	245	0,2488549
15,865	541,9	542,6	98,06	99,05	0,185	0,173	246	0,2502783
15,799	541,8	542,5	98,47	99,67	0,185	0,174	247	0,2492621
15,991	541,7	542,5	97,26	98,42	0,185	0,174	248	0,2522971
15,836	541,7	542,4	98,28	99,45	0,186	0,174	249	0,2498721
15,706	541,6	542,4	98,92	100,03	0,185	0,174	250	0,2478336
15,836	541,6	542,3	98,29	99,36	0,185	0,174	251	0,2498722
15,833	541,5	542,3	98,07	99,13	0,185	0,174	252	0,2498721
15,703	541,5	542,3	99,01	100,21	0,185	0,174	253	0,2478333
15,740	541,5	542,2	98,56	99,78	0,185	0,174	254	0,2484463
15,895	541,5	542,2	97,83	98,68	0,185	0,173	255	0,2508848
15,830	541,5	542,2	98,11	99,52	0,185	0,174	256	0,2498711
15,792	541,4	542,2	98,42	99,47	0,185	0,174	257	0,2492609
15,894	541,4	542,1	97,82	98,98	0,186	0,174	258	0,2508839
15,828	541,3	542,1	98,21	99,11	0,186	0,174	259	0,2498704
15,891	541,3	542,0	97,71	98,72	0,185	0,173	260	0,2508846
15,828	541,2	542,0	98,23	99,29	0,186	0,174	261	0,2498712
15,850	541,2	541,9	98,03	99,14	0,186	0,174	262	0,2502775
15,890	541,1	541,9	97,82	98,94	0,186	0,174	263	0,250884
15,848	541,1	541,9	97,98	99,06	0,186	0,174	264	0,2502769
15,757	541,0	541,8	98,59	99,51	0,186	0,174	265	0,2488538
15,782	541,0	541,8	98,23	99,50	0,185	0,174	266	0,2492605
15,846	541,0	541,7	98,06	99,08	0,185	0,174	267	0,2502775
15,843	540,9	541,7	97,89	99,12	0,186	0,174	268	0,2502772
15,727	540,9	541,7	98,73	99,90	0,186	0,174	269	0,2484447
15,815	540,9	541,6	98,18	99,12	0,186	0,174	270	0,2498708
15,814	540,8	541,6	98,18	99,42	0,186	0,174	271	0,2498704
15,876	540,8	541,6	97,75	98,76	0,186	0,174	272	0,2508843
15,836	540,7	541,5	98,05	99,12	0,186	0,174	273	0,2502763
15,835	540,7	541,4	98,04	98,97	0,186	0,174	274	0,2502762
15,769	540,6	541,4	98,38	99,34	0,186	0,174	275	0,2492598
15,871	540,5	541,3	97,74	98,97	0,186	0,174	276	0,2508835
15,922	540,5	541,3	97,40	98,62	0,186	0,174	277	0,2516907
15,743	540,4	541,3	98,66	99,80	0,186	0,174	278	0,2488846
15,828	540,4	541,2	97,95	99,11	0,186	0,174	279	0,2502756
15,801	540,4	541,2	98,20	99,24	0,186	0,174	280	0,2498689
15,761	540,4	541,1	98,41	99,64	0,186	0,174	281	0,2492592
15,762	540,3	541,1	98,23	99,51	0,186	0,174	282	0,2492595
15,862	540,3	541,1	97,72	98,96	0,186	0,174	283	0,2508825
15,799	540,2	541,0	98,20	99,40	0,186	0,174	284	0,2498693
15,820	540,2	541,0	97,95	99,18	0,186	0,174	285	0,2502757
15,820	540,2	541,0	97,88	99,08	0,186	0,174	286	0,2502753
15,795	540,2	540,9	98,00	98,96	0,186	0,174	287	0,2498686
15,820	540,2	540,9	97,81	99,07	0,186	0,174	288	0,2502754
15,754	540,1	540,9	98,40	99,55	0,186	0,174	289	0,2492596
15,817	540,1	540,8	98,01	99,22	0,186	0,174	290	0,250255
15,815	540,0	540,8	97,91	98,98	0,186	0,174	291	0,250275
15,943	540,0	540,7	97,16	98,35	0,186	0,174	292	0,2522939
15,851	539,9	540,7	97,73	98,64	0,186	0,174	293	0,2508825
15,814	539,9	540,6	97,93	99,07	0,186	0,174	294	0,2502749
15,965	539,8	540,6	97,02	97,83	0,186	0,174	295	0,2526963
15,902	539,8	540,6	97,52	98,37	0,186	0,174	296	0,2516892
15,899	539,7	540,5	97,42	98,36	0,186	0,174	297	0,2516891
15,849	539,7	540,5	97,72	98,77	0,186	0,174	298	0,2508822
15,847	539,7	540,5	97,64	98,79	0,186	0,174	299	0,2508821
15,654	539,6	540,4	98,93	100,14	0,186	0,174	300	0,2478299
15,845	539,6	540,4	97,88	98,69	0,186	0,174	301	0,2508815
15,692	539,5	540,3	98,54	99,94	0,186	0,174	302	0,2484432

15,781	539,5	540,3	98,11	99,41	0,186	0,174	303	0,2498683
15,779	539,5	540,3	98,16	99,27	0,186	0,174	304	0,2498676
15,778	539,4	540,2	98,26	99,23	0,186	0,174	305	0,2498677
16,020	539,4	540,2	96,77	97,44	0,186	0,174	306	0,2536975
15,842	539,3	540,1	97,83	98,69	0,186	0,174	307	0,2508806
15,841	539,3	540,1	97,65	98,88	0,186	0,174	308	0,2508807
15,930	539,2	540,0	97,22	98,25	0,186	0,174	309	0,252292
15,891	539,2	540,0	97,48	98,41	0,186	0,174	310	0,2516887
16,015	539,1	540,0	96,76	97,89	0,186	0,174	311	0,2536971
15,887	539,1	539,9	97,39	98,33	0,186	0,174	312	0,2516881
15,733	539,1	539,9	98,29	99,50	0,186	0,174	313	0,2492573
15,796	539,0	539,8	98,01	98,97	0,186	0,174	314	0,2502735
15,884	539,0	539,8	97,49	98,53	0,186	0,174	315	0,251688
15,795	538,9	539,8	97,89	99,22	0,186	0,174	316	0,2502737
15,947	538,9	539,7	97,01	98,17	0,186	0,174	317	0,2526945
15,833	538,9	539,7	97,59	98,83	0,186	0,174	318	0,2508802
15,807	538,9	539,7	97,84	98,88	0,186	0,174	319	0,2504845
15,832	538,8	539,6	97,79	98,75	0,186	0,174	320	0,250881
15,702	538,8	539,6	98,51	99,60	0,186	0,174	321	0,2488499
15,980	538,7	539,6	96,75	97,86	0,186	0,174	322	0,2532958
15,942	538,7	539,5	97,10	98,11	0,186	0,174	323	0,2526943
15,914	538,6	539,4	97,23	98,03	0,186	0,174	324	0,2522919
15,915	538,6	539,4	97,20	98,29	0,186	0,174	325	0,2522916
15,912	538,5	539,3	97,20	98,01	0,186	0,174	326	0,2522915
15,722	538,5	539,3	98,58	99,43	0,186	0,174	327	0,2492566
15,911	538,5	539,2	97,29	98,29	0,187	0,174	328	0,2522915
15,873	538,5	539,2	97,35	98,53	0,186	0,174	329	0,2516872
15,938	538,5	539,2	97,18	98,21	0,186	0,174	330	0,2526941
15,911	538,4	539,2	97,20	98,15	0,186	0,174	331	0,2522917
15,975	538,4	539,1	96,71	98,00	0,186	0,174	332	0,2532946
15,874	538,4	539,1	97,39	98,56	0,186	0,174	333	0,2516872
15,937	538,3	539,1	97,12	98,07	0,186	0,174	334	0,2526935
15,934	538,3	539,0	97,06	98,32	0,186	0,175	335	0,2526938
15,971	538,3	539,0	96,96	97,76	0,186	0,174	336	0,2532947
15,971	538,2	539,0	96,88	97,99	0,187	0,174	337	0,2532942
15,818	538,2	539,0	97,68	98,82	0,186	0,174	338	0,2508785
15,906	538,2	538,9	97,22	98,26	0,186	0,174	339	0,2522903
15,868	538,2	538,9	97,48	98,56	0,186	0,174	340	0,2516863
15,968	538,1	538,8	96,88	97,89	0,186	0,174	341	0,2532936
15,866	538,1	538,8	97,44	98,49	0,186	0,174	342	0,2516864
15,777	538,1	538,8	98,07	99,03	0,186	0,174	343	0,2502723
15,777	538,0	538,8	97,97	99,04	0,186	0,174	344	0,250272
15,749	538,0	538,7	98,15	99,29	0,186	0,174	345	0,2498657
15,863	537,9	538,7	97,40	98,49	0,186	0,174	346	0,2516866
15,901	537,9	538,7	97,03	98,31	0,186	0,174	347	0,2522908
15,926	537,9	538,6	97,14	98,02	0,186	0,174	348	0,2526921
15,925	537,8	538,6	97,05	98,16	0,186	0,174	349	0,2526927
15,898	537,8	538,5	97,43	98,23	0,187	0,174	350	0,25229
15,858	537,8	538,5	97,53	98,54	0,187	0,174	351	0,2516871
15,985	537,7	538,5	96,87	97,72	0,187	0,175	352	0,2536948
15,920	537,7	538,5	97,12	98,19	0,187	0,175	353	0,2526929
15,893	537,7	538,4	97,32	98,24	0,187	0,175	354	0,2522897
15,893	537,6	538,4	97,19	98,52	0,187	0,175	355	0,2522901
15,957	537,6	538,3	97,02	97,83	0,187	0,175	356	0,2533191
15,854	537,6	538,3	97,51	98,56	0,187	0,175	357	0,2516855
15,890	537,6	538,3	97,36	98,45	0,187	0,175	358	0,2522895
15,961	537,6	538,3	96,94	97,99	0,187	0,175	359	0,253293
16,015	537,6	538,2	96,86	97,80	0,187	0,174	360	0,2536944
15,920	537,7	538,3	98,05	99,02	0,187	0,175	361	0,2516854
15,833	537,9	538,4	98,59	99,81	0,187	0,175	362	0,249865
15,972	538,0	538,5	98,05	99,36	0,186	0,175	363	0,2516859

Average	Average	Average	Proportional Rates Medium/low fire					Average
15,79	Inlet +	Inlet +						0,245
	Outlet	Outlet	Average	Average	#1	#2		
Tunnel	Temp.	Temp.	98,06	101,78	System 1	System 2		SQRT
Velocity	Meter 1	Meter 2	**Proportional Rates**		Vol.Std.	Vol.Std.		Delta-P
			PR1	**PR2**			Time	
Ft/Sec	Deg. R	Deg. R	**%**	**%**	(ft3)	(ft3)	min	(in H2O)2
16,018	543,5	543,6			0,183	0,175	0	0,2356636
15,792	543,6	543,6	107,61	111,52	0,183	0,175	1	0,2341514
15,642	543,7	543,7	105,35	109,37	0,183	0,175	2	0,2352327
15,773	543,7	543,7	105,31	109,35	0,183	0,175	3	0,2363083
15,815	543,8	543,7	105,23	109,25	0,183	0,175	4	0,2367372
15,694	543,8	543,8	106,16	110,23	0,183	0,175	5	0,2348004
15,843	543,8	543,8	105,78	109,90	0,183	0,175	6	0,2363081
15,878	543,9	543,8	106,02	110,07	0,183	0,175	7	0,2363083
15,935	543,9	543,9	105,45	109,79	0,183	0,175	8	0,2373805
16,037	544,0	543,9	105,34	109,58	0,183	0,175	9	0,2382327
15,943	544,1	544,0	105,37	109,31	0,183	0,175	10	0,2373801
16,015	544,1	544,0	105,54	109,43	0,183	0,175	11	0,237808
16,395	544,2	544,1	106,05	110,08	0,183	0,175	12	0,2399311
16,477	544,3	544,1	107,21	111,39	0,183	0,175	13	0,2392961
16,354	544,4	544,2	108,76	112,73	0,183	0,175	14	0,2367389
16,168	544,6	544,3	106,67	110,91	0,183	0,175	15	0,2373806
16,119	544,7	544,4	104,12	108,36	0,182	0,175	16	0,239931
15,943	544,9	544,6	103,70	107,65	0,183	0,175	17	0,2392956
15,890	545,0	544,6	102,70	106,65	0,183	0,175	18	0,2399315
15,670	545,0	544,7	103,48	107,66	0,183	0,175	19	0,2373807
15,629	545,1	544,7	103,10	107,18	0,182	0,175	20	0,2373793
15,525	545,1	544,8	103,34	107,36	0,182	0,175	21	0,2363091
15,529	545,1	544,8	102,92	107,13	0,182	0,175	22	0,2367376
15,518	545,2	544,9	103,03	106,84	0,182	0,175	23	0,2367377
15,541	545,2	544,9	102,66	106,56	0,183	0,174	24	0,23738
15,532	545,3	544,9	102,43	106,42	0,182	0,175	25	0,2373802
15,520	545,3	545,0	102,36	106,23	0,182	0,174	26	0,2373802
15,642	545,3	545,0	101,52	105,48	0,182	0,174	27	0,2392957
15,500	545,4	545,0	102,32	106,24	0,182	0,174	28	0,2373805
15,552	545,4	545,1	101,64	105,68	0,182	0,174	29	0,2382327
15,486	545,4	545,1	101,99	106,19	0,182	0,174	30	0,2373801
15,510	545,4	545,1	101,90	105,96	0,182	0,175	31	0,237808
15,647	545,4	545,1	101,03	104,80	0,182	0,174	32	0,2399311
15,594	545,4	545,1	101,21	105,10	0,182	0,174	33	0,2392961
15,430	545,5	545,1	102,28	106,48	0,182	0,175	34	0,2367389
15,467	545,5	545,2	102,02	106,08	0,182	0,175	35	0,2373806
15,629	545,5	545,2	100,90	104,85	0,182	0,175	36	0,239931
15,586	545,5	545,2	101,15	105,05	0,182	0,174	37	0,2392956
15,631	545,5	545,2	100,95	104,94	0,182	0,175	38	0,2399315
15,469	545,5	545,2	102,16	106,04	0,182	0,175	39	0,2373807
15,502	545,5	545,3	102,07	105,73	0,183	0,174	40	0,2378088
15,601	545,5	545,3	101,38	105,32	0,183	0,174	41	0,2392963
15,533	545,5	545,3	101,76	105,60	0,182	0,175	42	0,2382337
15,544	545,5	545,3	101,92	105,84	0,182	0,174	43	0,2382339
15,487	545,5	545,3	102,09	106,00	0,182	0,174	44	0,2373813
15,519	545,5	545,3	102,04	106,08	0,182	0,174	45	0,237808
15,608	545,6	545,3	101,36	105,30	0,182	0,175	46	0,2392963
15,639	545,6	545,4	101,03	104,83	0,182	0,174	47	0,2399319
15,503	545,6	545,4	101,96	105,86	0,182	0,174	48	0,2378084
15,502	545,6	545,4	101,94	105,80	0,182	0,174	49	0,2378085
15,430	545,6	545,4	102,37	106,38	0,182	0,174	50	0,2367392
15,500	545,6	545,4	102,01	105,93	0,182	0,175	51	0,2378089
15,474	545,6	545,4	102,15	106,07	0,183	0,175	52	0,2373809
15,526	545,6	545,4	101,62	105,70	0,182	0,175	53	0,2382342
15,523	545,7	545,4	101,78	105,56	0,182	0,174	54	0,2382343

15,608	545,6	545,5	101,23	105,02	0,182	0,174	55	0,2393779
15,529	545,6	545,5	101,72	105,74	0,182	0,174	56	0,2382337
15,529	545,6	545,5	101,67	105,73	0,182	0,175	57	0,2382344
15,528	545,6	545,5	101,74	105,68	0,182	0,175	58	0,2382342
15,534	545,6	545,5	101,61	105,76	0,182	0,175	59	0,2382343
15,500	545,6	545,5	101,85	105,80	0,182	0,175	60	0,2378087
15,526	545,6	545,5	101,74	105,68	0,182	0,174	61	0,2382342
15,499	545,6	545,5	101,72	105,79	0,182	0,174	62	0,2378086
15,495	545,6	545,5	101,91	105,71	0,182	0,174	63	0,2378091
15,523	545,7	545,5	101,79	105,73	0,182	0,175	64	0,2382339
15,522	545,6	545,5	101,67	105,43	0,182	0,174	65	0,238234
15,497	545,7	545,5	101,71	105,68	0,182	0,174	66	0,237808
15,497	545,6	545,5	101,87	105,82	0,182	0,174	67	0,2378082
15,520	545,6	545,5	101,65	105,59	0,182	0,174	68	0,2382337
15,627	545,5	545,5	100,85	104,89	0,182	0,175	69	0,2399319
15,464	545,5	545,5	101,91	105,98	0,182	0,175	70	0,2373805
15,582	545,6	545,6	101,30	105,22	0,182	0,175	71	0,2392965
15,510	545,6	545,5	101,44	105,47	0,182	0,175	72	0,2382337
15,484	545,6	545,6	101,79	105,69	0,182	0,174	73	0,2378125
15,483	545,6	545,6	101,66	105,62	0,182	0,174	74	0,2378085
15,411	545,7	545,6	102,31	106,11	0,182	0,174	75	0,236739
15,475	545,6	545,6	101,70	105,70	0,182	0,174	76	0,2378082
15,477	545,7	545,6	101,74	105,64	0,182	0,175	77	0,2379336
15,500	545,7	545,6	101,43	105,57	0,182	0,175	78	0,2382341
15,492	545,7	545,6	101,50	105,50	0,182	0,175	79	0,2382353
15,496	545,7	545,7	101,45	105,38	0,182	0,175	80	0,2382343
15,628	545,7	545,7	100,44	104,50	0,182	0,174	81	0,2403545
15,427	545,8	545,7	101,76	105,62	0,182	0,174	82	0,2373811
15,586	545,8	545,7	100,57	104,28	0,182	0,174	83	0,2399316
15,579	545,8	545,7	100,51	104,47	0,182	0,174	84	0,2399316
15,527	545,8	545,7	100,73	104,65	0,182	0,174	85	0,2392912
15,585	545,8	545,7	100,25	103,99	0,182	0,174	86	0,2403551
15,348	545,7	545,7	101,72	105,72	0,182	0,174	87	0,2367387
15,502	545,7	545,7	100,63	104,51	0,182	0,174	88	0,2392961
15,303	545,6	545,7	101,91	105,66	0,182	0,174	89	0,2363111
15,562	545,6	545,7	100,27	104,00	0,183	0,174	90	0,2403549
15,487	545,6	545,7	100,50	104,49	0,182	0,175	91	0,2392966
15,551	545,6	545,6	100,01	103,91	0,182	0,175	92	0,2403592
15,576	545,5	545,6	99,83	103,77	0,182	0,174	93	0,240776
15,404	545,5	545,6	101,02	104,73	0,182	0,174	94	0,2382343
15,305	545,5	545,6	101,56	105,32	0,183	0,174	95	0,236739
15,467	545,5	545,5	100,36	104,44	0,182	0,174	96	0,2392971
15,526	545,4	545,5	99,89	103,60	0,182	0,174	97	0,2403548
15,585	545,4	545,5	99,39	103,31	0,182	0,174	98	0,2414077
15,479	545,4	545,5	100,04	103,83	0,182	0,175	99	0,2399311
15,358	545,3	545,5	100,71	104,62	0,183	0,175	100	0,238234
15,519	545,3	545,4	99,65	103,57	0,183	0,175	101	0,2407751
15,513	545,3	545,4	99,56	103,36	0,183	0,175	102	0,2407753
15,448	545,2	545,3	99,75	103,49	0,182	0,174	103	0,2399309
15,507	545,1	545,3	99,51	103,16	0,182	0,174	104	0,2407759
15,411	545,1	545,3	100,22	103,99	0,183	0,174	105	0,239296
15,489	545,0	545,2	99,89	103,75	0,183	0,175	106	0,2403539
15,461	545,0	545,2	100,01	103,92	0,183	0,175	107	0,2399312
15,415	545,0	545,2	100,25	103,94	0,183	0,175	108	0,239296
15,507	545,0	545,2	99,43	103,16	0,183	0,174	109	0,2407755
15,347	544,9	545,1	100,50	104,39	0,182	0,174	110	0,2382338
15,408	544,8	545,1	100,20	103,81	0,183	0,174	111	0,239296
15,478	544,7	545,1	99,67	103,42	0,183	0,174	112	0,240354
15,341	544,7	545,0	100,75	104,59	0,183	0,175	113	0,2382326
15,339	544,7	545,0	100,71	104,37	0,183	0,175	114	0,2382332
15,449	544,7	545,0	99,93	103,65	0,183	0,175	115	0,2399305
15,218	544,7	545,0	101,46	105,31	0,183	0,175	116	0,2363099

15,505	544,7	545,0	99,57	103,31	0,183	0,175	117	0,2407751
15,448	544,7	545,0	100,02	103,72	0,183	0,175	118	0,239931
15,506	544,7	545,0	99,63	103,20	0,183	0,174	119	0,240775
15,286	544,6	544,9	100,87	104,74	0,183	0,174	120	0,2373806
15,504	544,6	544,9	99,63	103,28	0,183	0,174	121	0,2407756
15,543	544,6	544,9	99,24	102,90	0,183	0,174	122	0,2414072
15,342	544,6	544,9	100,70	104,38	0,183	0,174	123	0,2382341
15,468	544,6	544,9	99,61	103,48	0,183	0,175	124	0,240354
15,540	544,5	544,9	99,26	103,01	0,183	0,175	125	0,2414069
15,250	544,5	544,8	101,41	105,24	0,183	0,175	126	0,2367386
15,575	544,5	544,8	99,29	102,88	0,183	0,175	127	0,2418268
15,349	544,5	544,8	100,68	104,52	0,183	0,175	128	0,2382335
15,489	544,5	544,8	99,76	103,55	0,183	0,175	129	0,2403536
15,423	544,5	544,8	100,16	104,24	0,182	0,175	130	0,2392957
15,521	544,4	544,7	99,65	103,60	0,183	0,175	131	0,2407747
15,592	544,3	544,7	99,31	103,21	0,183	0,175	132	0,2418264
15,355	544,3	544,7	100,82	104,70	0,183	0,175	133	0,2382352
15,307	544,3	544,7	101,16	105,18	0,183	0,175	134	0,2373808
15,502	544,3	544,7	99,88	103,87	0,183	0,175	135	0,2403541
15,432	544,3	544,7	100,34	104,11	0,183	0,175	136	0,2392952
15,474	544,2	544,6	100,20	103,80	0,183	0,175	137	0,2399302
15,521	544,2	544,6	99,81	103,43	0,183	0,175	138	0,2407747
15,463	544,2	544,6	100,21	103,73	0,183	0,175	139	0,2399305
15,412	544,1	544,6	100,11	104,23	0,183	0,175	140	0,2392955
15,406	544,0	544,5	100,36	104,15	0,183	0,175	141	0,2392948
15,403	544,0	544,5	100,20	104,13	0,183	0,175	142	0,2392954
15,537	544,0	544,4	99,28	103,25	0,183	0,175	143	0,2414067
15,434	544,0	544,4	99,90	103,66	0,183	0,175	144	0,2399452
15,325	543,9	544,4	100,63	104,33	0,183	0,175	145	0,2382327
15,464	543,9	544,3	99,80	103,46	0,183	0,175	146	0,2403532
15,389	543,9	544,3	100,27	104,25	0,183	0,175	147	0,2392949
15,453	543,9	544,3	99,96	103,70	0,183	0,175	148	0,2403526
15,455	543,8	544,3	99,74	103,46	0,183	0,175	149	0,2403528
15,542	543,8	544,2	99,07	102,83	0,183	0,175	150	0,2418256
15,416	543,7	544,2	99,92	103,72	0,183	0,175	151	0,23993
15,370	543,6	544,1	100,10	104,06	0,183	0,175	152	0,2392957
15,440	543,6	544,1	99,69	103,50	0,183	0,175	153	0,2403531
15,435	543,6	544,0	99,70	103,41	0,183	0,175	154	0,2403996
15,291	543,5	544,0	100,35	104,37	0,183	0,175	155	0,2382321
15,495	543,5	544,0	99,21	102,72	0,183	0,175	156	0,2414055
15,490	543,5	544,0	99,10	102,94	0,183	0,175	157	0,2414056
15,447	543,5	544,0	99,28	103,04	0,183	0,175	158	0,2407737
15,393	543,5	543,9	99,60	103,52	0,183	0,175	159	0,2399294
15,419	543,5	543,9	99,66	103,32	0,183	0,175	160	0,2403522
15,581	543,4	543,9	98,51	102,10	0,183	0,175	161	0,2428719
15,487	543,4	543,9	99,22	102,58	0,183	0,175	162	0,2414048
15,248	543,4	543,9	100,55	104,29	0,183	0,175	163	0,2378059
15,477	543,3	543,9	99,05	102,84	0,183	0,175	164	0,2414056
15,473	543,3	543,8	98,91	102,71	0,183	0,175	165	0,241405
15,501	543,2	543,8	98,93	102,82	0,183	0,175	166	0,2418247
15,335	543,2	543,8	99,76	103,52	0,183	0,175	167	0,2392942
15,367	543,2	543,7	99,64	103,17	0,183	0,175	168	0,2399289
15,463	543,1	543,7	98,86	102,74	0,183	0,175	169	0,241405
16,026	543,1	543,6	95,53	98,92	0,183	0,175	170	0,2502795
15,994	543,1	543,6	95,48	99,06	0,183	0,175	171	0,2498737
16,021	543,1	543,6	95,45	98,84	0,183	0,175	172	0,2502797
16,110	543,0	543,5	94,72	98,52	0,183	0,175	173	0,2516944
16,109	543,0	543,5	94,76	98,35	0,183	0,175	174	0,2516947
16,100	543,0	543,5	94,82	98,52	0,183	0,175	175	0,2516943
15,986	542,9	543,4	95,59	99,16	0,183	0,175	176	0,2498736
16,013	542,9	543,4	95,50	99,08	0,183	0,175	177	0,2502793
16,100	542,8	543,4	94,81	98,44	0,183	0,175	178	0,2516941

15,980	542,7	543,3	95,59	99,13	0,183	0,175	179	0,249873
16,007	542,6	543,2	95,47	99,07	0,183	0,175	180	0,2502795
16,157	542,6	543,2	94,56	98,05	0,183	0,175	181	0,2527006
16,153	542,5	543,2	94,43	98,14	0,183	0,175	182	0,2527002
15,936	542,5	543,1	95,79	99,25	0,183	0,175	183	0,2492629
16,001	542,4	543,1	95,40	98,90	0,183	0,175	184	0,2502799
15,936	542,4	543,0	95,81	99,44	0,183	0,175	185	0,2492631
15,995	542,4	543,0	95,38	99,07	0,183	0,175	186	0,2502793
15,966	542,3	543,0	95,48	99,11	0,183	0,175	187	0,249873
16,035	542,3	543,0	95,23	98,72	0,183	0,175	188	0,2508861
16,128	542,4	543,0	94,67	98,13	0,183	0,175	189	0,2522981
16,125	542,3	542,9	94,63	98,18	0,183	0,175	190	0,2522979
16,188	542,3	542,9	94,27	97,80	0,183	0,175	191	0,2533017
16,034	542,3	542,9	94,99	98,62	0,183	0,175	192	0,2508856
16,124	542,2	542,9	94,87	98,25	0,183	0,175	193	0,252286
16,084	542,2	542,9	94,80	98,38	0,183	0,175	194	0,2516937
16,214	542,2	542,8	94,09	97,67	0,183	0,175	195	0,2537025
15,990	542,2	542,8	95,32	99,08	0,183	0,175	196	0,2502797
15,964	542,2	542,8	95,56	99,37	0,183	0,176	197	0,2498721
16,079	542,1	542,8	94,72	98,47	0,183	0,175	198	0,2516933
16,118	542,1	542,7	94,64	98,23	0,183	0,175	199	0,2522974
16,017	542,1	542,8	95,19	98,81	0,183	0,175	200	0,2507399
16,143	542,2	542,8	94,38	97,96	0,183	0,175	201	0,2527005
15,983	542,2	542,8	95,47	98,83	0,183	0,175	202	0,2502791
15,957	542,2	542,7	95,39	99,08	0,183	0,175	203	0,2498727
15,984	542,1	542,7	95,48	99,04	0,183	0,175	204	0,2502789
16,176	542,0	542,7	94,11	97,66	0,183	0,175	205	0,2533013
16,133	541,9	542,6	94,46	97,98	0,183	0,175	206	0,2526999
16,134	541,9	542,6	94,44	97,97	0,183	0,175	207	0,2526994
15,914	541,8	542,5	96,02	99,13	0,184	0,175	208	0,2492622
16,067	541,8	542,5	94,90	98,30	0,184	0,175	209	0,251693
16,025	541,7	542,4	95,15	98,63	0,184	0,175	210	0,2510039
15,887	541,7	542,4	95,99	99,61	0,184	0,175	211	0,248855
16,013	541,7	542,4	95,02	98,86	0,183	0,176	212	0,2508596
15,905	541,7	542,4	95,53	99,43	0,183	0,176	213	0,2492621
16,007	541,7	542,3	95,15	98,68	0,183	0,175	214	0,2508859
16,099	541,7	542,3	94,52	98,12	0,183	0,175	215	0,2522969
16,097	541,6	542,3	94,58	98,02	0,183	0,175	216	0,2522971
16,121	541,6	542,3	94,41	97,83	0,183	0,175	217	0,2526994
16,054	541,6	542,2	94,97	98,43	0,184	0,175	218	0,2516925
16,113	541,6	542,2	94,33	98,02	0,183	0,175	219	0,2525345
16,121	541,5	542,2	94,48	97,96	0,183	0,175	220	0,2526994
16,092	541,5	542,2	94,64	98,04	0,184	0,175	221	0,2522964
15,935	541,5	542,2	95,60	99,00	0,184	0,175	222	0,2498716
16,115	541,5	542,1	94,40	97,93	0,184	0,175	223	0,2527029
16,118	541,5	542,2	94,51	97,93	0,184	0,175	224	0,2526995
16,178	541,4	542,1	94,09	97,44	0,184	0,175	225	0,2537011
16,153	541,4	542,1	94,46	97,75	0,184	0,175	226	0,2533007
16,088	541,4	542,1	94,56	98,01	0,184	0,175	227	0,2522967
16,084	541,4	542,0	94,48	98,21	0,183	0,175	228	0,2522969
16,042	541,4	542,0	94,77	98,40	0,184	0,176	229	0,2516925
16,046	541,4	542,0	94,89	98,29	0,184	0,175	230	0,2516923
15,954	541,3	542,0	95,22	98,93	0,184	0,175	231	0,250278
16,143	541,3	542,0	94,15	97,70	0,183	0,175	232	0,2533004
16,076	541,3	541,9	94,55	98,15	0,184	0,176	233	0,2522965
16,036	541,3	541,9	94,70	98,27	0,184	0,176	234	0,2516921
16,078	541,2	541,9	94,44	97,94	0,184	0,175	235	0,2523897
16,137	541,2	541,9	93,90	97,85	0,183	0,176	236	0,2533006
16,135	541,2	541,9	94,14	97,53	0,183	0,176	237	0,2533001
15,940	541,2	541,9	95,18	98,81	0,184	0,175	238	0,2502775
16,098	541,2	541,8	94,44	98,09	0,184	0,176	239	0,2526989
16,028	541,1	541,8	94,77	98,39	0,184	0,176	240	0,2516926

15,937	541,2	541,8	95,21	98,91	0,184	0,176	241	0,2502789
16,025	541,2	541,8	94,84	98,35	0,184	0,176	242	0,2516923
16,068	541,2	541,8	94,64	98,00	0,184	0,176	243	0,2522966
15,779	541,1	541,8	96,26	99,86	0,184	0,176	244	0,2478334
16,095	541,1	541,8	94,36	97,88	0,184	0,176	245	0,2526989
16,127	541,1	541,8	94,13	97,68	0,184	0,176	246	0,2533005
16,092	541,1	541,7	94,45	98,02	0,184	0,176	247	0,2526985
16,128	541,0	541,7	94,30	97,49	0,184	0,176	248	0,2533001
16,127	541,0	541,7	94,18	97,68	0,184	0,175	249	0,2532999
16,086	540,9	541,6	94,36	97,87	0,184	0,176	250	0,2526984
16,060	540,9	541,6	94,41	98,05	0,184	0,176	251	0,2522958
15,971	540,9	541,6	95,02	98,67	0,184	0,176	252	0,2508847
16,023	540,9	541,6	94,87	98,28	0,184	0,176	253	0,2516919
16,021	540,9	541,6	94,75	98,20	0,184	0,176	254	0,2516927
16,174	540,9	541,6	93,90	97,24	0,184	0,175	255	0,2541
16,087	540,9	541,5	94,38	97,92	0,184	0,176	256	0,2526984
16,021	540,9	541,5	94,72	98,21	0,184	0,176	257	0,2516919
16,123	540,8	541,5	93,95	97,53	0,184	0,175	258	0,2533001
16,058	540,8	541,5	94,56	97,85	0,184	0,175	259	0,2522962
16,147	540,8	541,5	93,94	97,64	0,184	0,176	260	0,2537005
16,145	540,8	541,5	93,81	97,43	0,184	0,176	261	0,2537002
16,056	540,8	541,5	94,32	97,91	0,183	0,175	262	0,2522961
16,053	540,7	541,4	94,40	98,00	0,184	0,175	263	0,252296
15,967	540,7	541,4	94,89	98,71	0,184	0,176	264	0,2508841
15,834	540,7	541,4	95,79	99,47	0,184	0,176	265	0,2488538
16,016	540,7	541,4	94,71	98,30	0,184	0,176	266	0,2516919
16,055	540,6	541,3	94,34	98,08	0,184	0,176	267	0,2522961
16,015	540,6	541,3	94,81	98,32	0,184	0,176	268	0,2516914
16,016	540,6	541,3	94,80	98,26	0,184	0,176	269	0,2516917
16,053	540,6	541,3	94,35	98,06	0,184	0,176	270	0,2522947
16,013	540,6	541,3	94,74	98,27	0,184	0,176	271	0,2516915
16,074	540,5	541,2	94,38	97,79	0,184	0,176	272	0,2526982
16,115	540,5	541,2	94,19	97,51	0,184	0,175	273	0,2532991
16,048	540,5	541,2	94,39	97,88	0,184	0,175	274	0,2522955
16,035	540,5	541,1	94,64	98,20	0,184	0,176	275	0,2520462
16,112	540,5	541,1	94,05	97,51	0,184	0,176	276	0,2532996
15,894	540,5	541,1	95,43	99,05	0,184	0,176	277	0,2498706
16,009	540,4	541,1	94,82	98,40	0,184	0,176	278	0,2516911
16,049	540,4	541,1	94,50	98,12	0,184	0,176	279	0,2522954
16,072	540,4	541,1	94,29	97,83	0,184	0,176	280	0,2526973
16,074	540,4	541,1	94,33	97,87	0,184	0,176	281	0,2526983
16,137	540,4	541,0	93,82	97,46	0,184	0,176	282	0,2536994
15,959	540,4	541,0	95,04	98,66	0,184	0,176	283	0,250884
16,072	540,4	541,1	94,30	97,92	0,184	0,176	284	0,2526979
16,160	540,3	541,0	93,64	97,24	0,184	0,176	285	0,2540992
16,135	540,3	541,0	94,06	97,66	0,184	0,176	286	0,2537079
16,136	540,3	541,0	94,08	97,60	0,184	0,176	287	0,2536999
15,956	540,3	541,0	94,98	98,75	0,184	0,176	288	0,2508839
15,917	540,3	541,0	95,47	98,76	0,184	0,176	289	0,2502763
15,954	540,3	541,0	95,02	98,57	0,184	0,176	290	0,2508835
16,069	540,3	541,0	94,44	97,75	0,184	0,176	291	0,2526973
16,003	540,3	541,0	94,54	98,26	0,184	0,176	292	0,2516906
15,952	540,3	541,0	95,11	98,49	0,184	0,176	293	0,250883
15,858	540,3	541,0	95,57	99,15	0,184	0,176	294	0,2493971
16,103	540,3	540,9	94,09	97,73	0,184	0,176	295	0,2532988
16,036	540,3	540,9	94,45	97,84	0,184	0,176	296	0,2522987
16,152	540,3	540,9	93,86	97,43	0,184	0,176	297	0,2540988
16,126	540,3	540,9	93,97	97,35	0,184	0,176	298	0,2536996
16,064	540,3	540,9	94,19	97,76	0,184	0,176	299	0,2526984
15,985	540,2	540,9	94,93	98,30	0,184	0,176	300	0,2514506
16,153	540,2	540,9	93,96	97,32	0,184	0,176	301	0,2540692
16,131	540,2	540,8	94,13	97,52	0,184	0,176	302	0,2536992

16,004	540,2	540,8	94,66	98,18	0,184	0,176	303	0,2516907
15,885	540,1	540,8	95,34	98,92	0,184	0,176	304	0,2498697
16,067	540,1	540,8	94,27	97,90	0,184	0,176	305	0,2526972
16,067	540,1	540,8	94,20	97,94	0,184	0,176	306	0,2526969
16,133	540,1	540,8	93,91	97,44	0,184	0,176	307	0,2536989
16,003	540,1	540,8	94,82	98,14	0,184	0,176	308	0,2516906
16,001	540,1	540,8	94,78	98,29	0,184	0,176	309	0,2516909
16,105	540,1	540,8	94,01	97,53	0,184	0,176	310	0,2532981
16,042	540,0	540,7	94,62	97,97	0,184	0,176	311	0,2522945
16,106	540,0	540,7	94,26	97,72	0,184	0,176	312	0,2532984
16,154	540,0	540,7	93,90	97,31	0,184	0,176	313	0,2540983
16,042	540,0	540,7	94,70	97,82	0,184	0,176	314	0,2522943
16,041	540,0	540,7	94,41	97,96	0,184	0,176	315	0,2522942
16,124	540,0	540,6	94,08	97,68	0,184	0,176	316	0,2536937
15,999	540,0	540,6	94,66	98,32	0,184	0,176	317	0,251691
15,997	540,0	540,6	94,79	98,14	0,184	0,176	318	0,2516902
16,102	540,0	540,6	94,17	97,74	0,184	0,176	319	0,253298
16,063	539,9	540,6	94,32	97,89	0,184	0,176	320	0,252697
16,038	539,9	540,6	94,44	98,20	0,184	0,176	321	0,2522942
16,125	539,9	540,6	94,07	97,49	0,184	0,176	322	0,2536992
15,998	540,0	540,6	94,68	98,43	0,184	0,176	323	0,2516902
16,099	540,0	540,6	94,02	97,61	0,184	0,176	324	0,2532983
16,120	540,0	540,6	93,95	97,58	0,184	0,176	325	0,2536976
15,989	539,9	540,5	94,63	98,24	0,184	0,176	326	0,2516902
16,093	539,9	540,5	94,05	97,63	0,184	0,176	327	0,2532992
16,121	539,9	540,5	93,91	97,36	0,184	0,176	328	0,2536991
15,902	539,9	540,5	95,15	99,01	0,184	0,176	329	0,2502752
16,145	539,9	540,5	93,89	97,40	0,184	0,176	330	0,2540983
15,990	539,9	540,5	94,63	98,15	0,184	0,176	331	0,2516893

APPENDIX 3: Calibration data

4407 rue Charleroi, Montréal-Nord (Québec) H1H 1T6 Canada
TEL.: (514) 329-3242 / 1 888 774-6665
FAX : (514) 329-3750
info.canada@trescal.com

Certificat d'Étalonnage / Certificate of Calibration

CLIENT :
SERVICES POLYTESTS INC.
695-B GAUDETTE
ST-JEAN-SUR-RICHELIEU, QUEBEC

Description: VÉRIFICATEUR D'HUMIDITÉ / MOISTURE METER
Fabricant/ Manufacturer: DELMHORST
Modèle/ Model : MCS-1 REFERENCE STANDARD
No série / Serial no : N/A
 # Inventaire / Asset # : **EM-191**

CERTIFICAT No / Certificate No: **254067**

PROCÉDURE / Procedure :
TRESCAL - DELMHORST_MCS-1 REFERENCE STANDARD

aaaa - mm - jj
Date étalonnage/ Calibration Performed : 2018-12-19

Echéance/ Due Date : 2019-12-19

Type de résultat / *Results type* : **As-Found = As-Left**

Résultats d'essais / *Test results* : Conforme / In Tolerance

Conditions de mesure / Measurement conditions

TEMPÉRATURE / Temp. : **23.2°C**

HUMIDITÉ / Humidity : **28% RH**

Usage restreint/ *Restricted use* : ☐

Réparation effectuée / *Repair performed* : ☐

Ajustement effectué / *Adjustment performed* : ☐

ÉTALONS UTILISÉS/ Standards Used:

Identification	Manuf.	Model	Description	Ser. #	Etalonné/ Cal.	Echéance/ Due
PR0661	FLUKE	8508A	REFERENCE MULTIMETER	389272208	2018-07-27	2019-07-27

Les spécifications mentionnées comme limites de tolérances d'essai sont celles établies par le manufacturier, sauf indication contraire.
Test tolerance limits are based on manufacturers specifications unless stated otherwise.

NOTES :

2019. 01. 07

Technicien :
Technician

V. KOSTADINOV

Le système qualité de la société est conforme aux exigences de la norme **ISO 17025** et les étalons utilisés pour le processus d'étalonnage sont retraçables au SI par l'entremise du CNRC et/ou du NIST.
Our quality system complies with the requirements of ISO 17025 and the standards used for the calibration are traceable to SI through NRC and/or NIST.

LE DROIT D'AUTEUR DE CE CERTIFICAT APPARTIENT À TRESCAL / PRIMO INSTRUMENT INC.CE CERTIFICAT NE PEUT ÊTRE REPRODUIT AUTREMENT QU'EN ENTIER ET AVEC LE CONSENTEMENT PRÉALABLE ÉCRIT DU GROUPE TRESCAL.
TRESCAL / PRIMO INSTRUMENT INC. OWN COPYRIGHT OF THIS CERTIFICATE.THE CERTIFICATE MAY NOT BE REPRODUCED OTHER THAN IN FULL EXCEPT WITH THE PRIOR WRITTEN CONSENT OF THE TRESCAL GROUP.

CALIBRATION | SOLUTIONS | TO | IMPROVE | YOUR | PERFORMANCE
LA | MÉTROLOGIE | AU | SERVICE | DE | VOTRE | PERFORMANCE
www.trescal.com

Réf : Primo.056M 2016-10-04 Rev. 7.1

Trescal

Certificat d'Étalonnage
Certificate of Calibration

	254067
CLIENT / Customer :	SERVICES POLYTESTS INC.
DESCRIPTION / Description :	VÉRIFICATEUR D'HUMIDITÉ / MOISTURE METER
MANUFACTURIER / Manufacturer :	DELMHORST
MODÈLE / Model :	MCS-1 REFERENCE STANDARD

DESCRIPTION Description		LIMITES Limits	LECTURES Readings	LIMITES Limits
DOUGLAS-FIR @ 80°F	**Nominal**			**Déviation** *Mohms*
12 %	120 MOhms		115.1	4.9
22 %	1.10 MOhms		1.099	0.001

ACCREDITATION 17025 ISO/IEC

CALIBRATION | SOLUTIONS | TO | IMPROVE | YOUR | PERFORMANCE
LA | MÉTROLOGIE | AU | SERVICE | DE | VOTRE | PERFORMANCE

www.trescal.com

Instrumentation Saint•Laurent inc.
Accrédité ISO 17025

CLAS NRC-CNRC
CLAS 2010-02

SCC Accredited LAB
LAB Accrédité CCN
N°669

80 rue de la montagne
St-Joseph du lac
(Québec), J0N 1M0
Tél: (450) 473-6169
Fax: (450) 473-5207
Email: inst.st-laurent@videotron.ca

CERTIFICAT D'ÉTALONNAGE

No.Certificat: CE-EM-006 07/03/18

CLIENT	
Compagnie:	Services Polytests Inc
Adresse:	695 B rue Gaudette
	St-Jean-sur-Richelieu, Québec, J3B 7S7

SPÉCIFICATION DE CALIBRATION	
Procédure de service:	4IN9106
Précision requise:	+\-0.25"H2O
Fréquence d'étalonnage: (jours)	365

SPÉCIFICATION DE L'INSTRUMENT			
Type d'instrument:	Indicateur	Type d'entrée:	Pression
Manufacturier:	Dwyer	Type de sortie:	Digitale
No. Model:	MS-321-LCD	Type de mesure:	Pression
No. Série:	E47U020014	Gamme:	0-0.5"H2O
Emplacement:	N.A.	No. Machine:	N.A.

SPÉCIFICATION DE L'ÉTALON			
Étalon Utilisé:	Fluke 744	No. du certificat d'étalonnage:	2017004079
No. Série:	7798010	Dernière date d'étalonnage:	5-Jul-17
Certificat fait par:	Alpha Controls	Prochaine date d'étalonnage:	5-Jul-18
Commentaire:			

SPÉCIFICATION DE L'ÉTALON			
Étalon Utilisé:	Setra	No. du certificat d'étalonnage:	2018001018
No. Série:	2784759	Dernière date d'étalonnage:	21-Feb-18
Certificat fait par:	Alpha Controls	Prochaine date d'étalonnage:	21-Feb-19
Commentaire:			

RÉSULTAT D'ÉTALONNAGE

Entrée Source	Valeur Donnée	Valeur Actuelle	Erreur de Déviation	Valeur après Étalonnage	Incertitude Élargie	Commentaire
0.0000 "H2O	0.000 "H2O	0.000 "H2O	0.000 "H2O	0.000 "H2O	0.25 "H2O	Vérification indicateur
0.2500 "H2O	0.250 "H2O	0.249 "H2O	-0.001 "H2O	0.249 "H2O	0.25 "H2O	Vérification indicateur
0.5000 "H2O	0.500 "H2O	0.505 "H2O	0.005 "H2O	0.505 "H2O	0.25 "H2O	Vérification indicateur
0.7500 "H2O	0.750 "H2O	0.754 "H2O	0.004 "H2O	0.754 "H2O	0.25 "H2O	Vérification indicateur
1.0000 "H2O	1.000 "H2O	1.001 "H2O	0.001 "H2O	1.001 "H2O	0.25 "H2O	Vérification indicateur
0.0000 "H2O	0.0000 V.DC.	0.0003 V.DC.	+0.0003 V.DC.	0.0003 V.DC.	0.00 V.DC.	Vérification sortie analogique
0.2500 "H2O	2.5000 V.DC.	2.4811 V.DC.	-0.0189 V.DC.	2.4811 V.DC.	0.00 V.DC.	Vérification sortie analogique
0.5000 "H2O	5.0000 V.DC.	5.0389 V.DC.	0.0389 V.DC.	5.0389 V.DC.	0.00 V.DC.	Vérification sortie analogique
0.7500 "H2O	7.5000 V.DC.	7.5582 V.DC.	0.0582 V.DC.	7.5582 V.DC.	0.00 V.DC.	Vérification sortie analogique
1.0000 "H2O	10.0000 V.DC.	10.0285 V.DC.	0.0285 V.DC.	10.0285 V.DC.	0.00 V.DC.	Vérification sortie analogique

Conditions Environnementales: Température: 20 °C Humidité: 33 %RH

Type d'Étalonnage:

5F09106

Le droit d'auteur du présent certificat appartient à Inst. St-Laurent Inc et doit être reproduit intégralement, à moins d'une autorisation écrite de Inst. St-Laurent Inc.

Instrumentation Saint•Laurent inc.
Accrédité ISO 17025

CLAS NRC-CNRC
CLAS 2010-02

SCC Accredited LAB
LAB Accrédité CCN
N°669

80 rue de la montagne
St-Joseph du lac
(Québec), J0N 1M0
Tél: (450) 473-6169
Fax: (450) 473-5207
Email: inst.st-laurent@videotron.ca

CERTIFICAT D'ÉTALONNAGE

No.Certificat: CE-EM-006 07/03/18

CLIENT	
Compagnie:	Services Polytests Inc
Adresse:	695 B rue Gaudette
	St-Jean-sur-Richelieu, Québec, J3B 7S7

SPÉCIFICATION DE CALIBRATION	
Procédure de service:	4IN9106
Précision requise:	+\-0.25"H2O
Fréquence d'étalonnage: (jours)	365

SPÉCIFICATION DE L'INSTRUMENT			
Type d'instrument:	Indicateur	Type d'entrée:	Pression
Manufacturier:	Dwyer	Type de sortie:	Digitale
No. Model:	MS-321-LCD	Type de mesure:	Pression
No. Série:	E47U020014	Gamme:	0-0.5"H2O
Emplacement:	N.A.	No. Machine:	N.A.

Instrumentation St-Laurent Inc. Certifie que l'instrument ci-haut, rencontre ou excède les spécifications établies par le fabriquant. Le système qualité de l'entreprise est conforme aux exigences de la norme ISO 17025 et les étalons utilisés pour effectuer l'étalonnage est retraçable au CNRC et/ou au NIST. Le degré d'incertitude est basé sur un niveau de confiance=95%, K=2.

DATE D'ÉTALONNAGE / ÉMISSION DU CERTIFICAT	
Date d'Étalonnage:	7 Mars 2018
Date du prochain Étalonnage:	7 Mars 2019
Date d'émission du certificat:	7 Mars 2018

CONFORMITÉ D'ÉTALONNAGE	Avant	Après
Conforme:	X	X
Non Conforme:		

Le Service d'évaluation des laboratoires d'étalonnage (CLAS) du Conseil national de recherches du Canada (CNRC) a évalué et certifié la capacité d'étalonnage du laboratoire et la traçabilité au Système international d'unités (SI) ou à des étalons acceptables selon le CLAS. Le présent certificat d'étalonnage est délivré conformément aux conditions de certification du CLAS et aux conditions d'accréditation du Conseil canadien des normes (CCN). Numéro d'accréditation du CCN: # 669. Le CLAS et le CCN ne garantissent pas l'exactitude des étalonnages individuels effectués par les laboratoires accrédités.

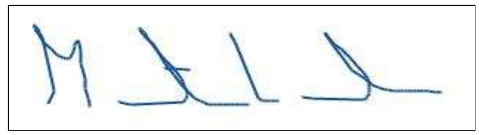

Martin Langlais - Technicien

5F09106

Le droit d'auteur du présent certificat appartient à Inst. St-Laurent Inc et doit être reproduit intégralement, à moins d'une autorisation écrite de Inst. St-Laurent Inc.

Instrumentation Saint•Laurent inc.
Accrédité ISO 17025

CLAS NRC-CNRC
CLAS 2010-02

SCC Accredited LAB
LAB Accrédité CCN
N°669

80 rue de la montagne
St-Joseph du lac
(Québec), J0N 1M0
Tél: (450) 473-6169
Fax: (450) 473-5207
Email: inst.st-laurent@videotron.ca

CERTIFICAT D'ÉTALONNAGE

No.Certificat: CE-EM-007 07/03/18

CLIENT	
Compagnie:	Services Polytests Inc
Adresse:	695 B rue Gaudette
	St-Jean-sur-Richelieu, Québec, J3B 7S7

SPÉCIFICATION DE CALIBRATION	
Procédure de service:	4IN9106
Précision requise:	+\- 0.25"H2O
Fréquence d'étalonnage: (jours)	365

SPÉCIFICATION DE L'INSTRUMENT			
Type d'instrument:	Indicateur	Type d'entrée:	Pression
Manufacturier:	Dwyer	Type de sortie:	Digitale
No. Model:	MS-321-LCD	Type de mesure:	Pression
No. Série:	E23S020111/12	Gamme:	0-0.5"H2O
Emplacement:	N.A.	No. Machine:	N.A.

SPÉCIFICATION DE L'ÉTALON			
Étalon Utilisé:	Fluke 744	No. du certificat d'étalonnage:	2017004079
No. Série:	7798010	Dernière date d'étalonnage:	5-Jul-17
Certificat fait par:	Alpha Controls	Prochaine date d'étalonnage:	5-Jul-18
Commentaire:			

SPÉCIFICATION DE L'ÉTALON			
Étalon Utilisé:	Setra	No. du certificat d'étalonnage:	2018001018
No. Série:	2784759	Dernière date d'étalonnage:	21-Feb-18
Certificat fait par:	Alpha Controls	Prochaine date d'étalonnage:	21-Feb-19
Commentaire:			

RÉSULTAT D'ÉTALONNAGE

Entrée Source	Valeur Donnée	Valeur Actuelle	Erreur de Déviation	Valeur après Étalonnage	Incertitude Élargie	Commentaire
0.0000 "H2O	0.0000 "H2O	0.0000 "H2O	0.0000 "H2O	0.0000 "H2O	0.25 "H2O	Vérification indicateur
0.0250 "H2O	0.0250 "H2O	0.0249 "H2O	-0.0001 "H2O	0.0249 "H2O	0.25 "H2O	Vérification indicateur
0.0500 "H2O	0.0500 "H2O	0.0498 "H2O	-0.0002 "H2O	0.0498 "H2O	0.25 "H2O	Vérification indicateur
0.0750 "H2O	0.0750 "H2O	0.0747 "H2O	-0.0003 "H2O	0.0747 "H2O	0.25 "H2O	Vérification indicateur
0.1000 "H2O	0.1000 "H2O	0.0996 "H2O	-0.0004 "H2O	0.0996 "H2O	0.25 "H2O	Vérification indicateur
0.0000 "H2O	0.0000 V.DC.	0.0015 V.DC.	+0.0015 V.DC.	0.0015 V.DC.	0.01 V.DC.	Vérification sortie analogique
0.0250 "H2O	2.5000 V.DC.	2.5020 V.DC.	0.0020 V.DC.	2.5020 V.DC.	0.01 V.DC.	Vérification sortie analogique
0.0500 "H2O	5.0000 V.DC.	4.9842 V.DC.	-0.0158 V.DC.	4.9842 V.DC.	0.01 V.DC.	Vérification sortie analogique
0.0750 "H2O	7.5000 V.DC.	7.4924 V.DC.	-0.0076 V.DC.	7.4924 V.DC.	0.01 V.DC.	Vérification sortie analogique
0.1000 "H2O	10.0000 V.DC.	9.9524 V.DC.	-0.0476 V.DC.	9.9524 V.DC.	0.01 V.DC.	Vérification sortie analogique

Conditions Environnementales: Température: 20 °C Humidité: 33 %RH

Type d'Étalonnage:

5F09106

Le droit d'auteur du présent certificat appartient à Inst. St-Laurent Inc et doit être reproduit intégralement, à moins d'une autorisation écrite de Inst. St-Laurent Inc.

Instrumentation Saint•Laurent inc.
Accrédité ISO 17025

CLAS NRC-CNRC
CLAS 2010-02

SCC Accredited LAB
LAB Accrédité CCN
N°669

80 rue de la montagne
St-Joseph du lac
(Québec), J0N 1M0
Tél: (450) 473-6169
Fax: (450) 473-5207
Email: inst.st-laurent@videotron.ca

CERTIFICAT D'ÉTALONNAGE

No.Certificat: CE-EM-007 07/03/18

CLIENT	
Compagnie:	Services Polytests Inc
Adresse:	695 B rue Gaudette
	St-Jean-sur-Richelieu, Québec, J3B 7S7

SPÉCIFICATION DE CALIBRATION	
Procédure de service:	4IN9106
Précision requise:	+\- 0.25"H2O
Fréquence d'étalonnage: (jours)	365

SPÉCIFICATION DE L'INSTRUMENT			
Type d'instrument:	Indicateur	Type d'entrée:	Pression
Manufacturier:	Dwyer	Type de sortie:	Digitale
No. Model:	MS-321-LCD	Type de mesure:	Pression
No. Série:	E23S020111/12	Gamme:	0-0.5"H2O
Emplacement:	N.A.	No. Machine:	N.A.

Instrumentation St-Laurent Inc. Certifie que l'instrument ci-haut, rencontre ou excède les spécifications établies par le fabriquant. Le système qualité de l'entreprise est conforme aux exigences de la norme ISO 17025 et les étalons utilisés pour effectuer l'étalonnage est retraçable au CNRC et/ou au NIST. Le degré d'incertitude est basé sur un niveau de confiance=95%, K=2.

DATE D'ÉTALONNAGE / ÉMISSION DU CERTIFICAT	
Date d'Étalonnage:	7 Mars 2018
Date du prochain Étalonnage:	7 Mars 2019
Date d'émission du certificat:	7 Mars 2018

CONFORMITÉ D'ÉTALONNAGE	Avant	Après
Conforme:	X	X
Non Conforme:		

Le Service d'évaluation des laboratoires d'étalonnage (CLAS) du Conseil national de recherches du Canada (CNRC) a évalué et certifié la capacité d'étalonnage du laboratoire et la traçabilité au Système international d'unités (SI) ou à des étalons acceptables selon le CLAS. Le présent certificat d'étalonnage est délivré conformément aux conditions de certification du CLAS et aux conditions d'accréditation du Conseil canadien des normes (CCN). Numéro d'accréditation du CCN: # 669. Le CLAS et le CCN ne garantissent pas l'exactitude des étalonnages individuels effectués par les laboratoires accrédités.



Martin Langlais - Technicien

5F09106

Le droit d'auteur du présent certificat appartient à Inst. St-Laurent Inc et doit être reproduit intégralement, à moins d'une autorisation écrite de Inst. St-Laurent Inc.

DISPERSION
Laboratoire • Laboratory DIVISION - TRANSCAT CANADA

ACCREDITATION ISO 17025 CNN Portée Numéro 668

CERTIFICAT D'ÉTALONNAGE

9900 Chemin de la Côte-de-Liesse, Lachine, QC H8T 1A1
www.dispersion.ca 1.866.390.5066

Client :	Polytests	**No. du Certificat :**	**155-578412-181-1649**
Adresse :	695 B rue Gaudette Saint-Jean-sur-Richelieu, QC J3B7S7	**Date d'étalonnage :**	11-12-2018

Technicien:
Mossad, Osama

David Llorens, Responsable Qualité

DESCRIPTION DU SERVICE:

Modèle de Balance :	AR2140	**Méthode :**	ISO 17025
Manufacturier :	Ohaus	**Date d'approbation :**	11-12-2018
Numéro de Série :	M3658329010091	**Date prochain étalonnage :**	11-12-2019
Numéro d'identification :	EM-051	**accréditation CCN n. :**	668
Capacité :	210g	**Certification CLAS n. :**	2010-01
Résolution:	0.0001g		

Condition d'essai :	Temp °C:	27.1	Pression kPa:	99.81	Humidité %:	26.1

Note: Les conditions environnementales ne sont pas utilisées dans le calcul de l'incertitude.

CETTE BALANCE RENCONTRE LES SPÉCIFICATIONS SUIVANTES:

Type de test :	**Manufacturier**
Excentricité:	☑ Oui ☐ Non
Linéarité:	☑ Oui ☐ Non
Sensibilité:	☑ Oui ☐ Non
Répétabilité:	☑ Oui ☐ Non

NOTES:

Cette balance a été certifiée selon la procédure de travail PDL-09-MG-010 (certification de balance analytique et à plateau) et la et la procédure PDL-09-MG-012 (détermination des incertitudes de pesées). Nos étalons sont certifiés à chaque année. Le droit d'auteur du présent certificat appartient au laboratoire délivreur et doit être reproduit intégralement, à moins d'une autorisation écrite du laboratoire délivreur.

2018-12-12

DISPERSION
Laboratoire • Laboratory DIVISION • TRANSCAT CANADA

ACCREDITATION ISO 17025
CNN Portée Numéro 668

9900 Chemin de la Côte-de-Liesse, Lachine, QC H8T 1A1
www.dispersion.ca 1.866.390.5066

CERTIFICAT D'ÉTALONNAGE

Client :	Polytests	**No. du Certificat :**	**155-578412-181-1649**
Adresse :	695 B rue Gaudette	**Accrédtation CCN n. :**	668
	Saint-Jean-sur-Richelieu, QC	**Certification CLAS n. :**	2010-01
	J3B7S7	**Modèle de Balance :**	AR2140
		Date d'étalonnage :	11-12-2018
Méthode :	ISO 17025	**Date du prochain étalonnage :**	11-12-2019

TEST D'EXCENTRICITÉ:

Poids Test: 100 g Tolérance 0.0004 g
(Note: Le Poids Test est taré au centre du plateau de pesée)

Position	Avant Ajustement	Après Ajustement
1: Centre:	0.0000 g	---
2: Avant Gauche:	0.0000 g	---
3: Arrière Gauche:	0.0000 g	---
4: Arrière Droit:	0.0000 g	---
5: Avant Droit:	0.0000 g	---
Résultats	0.0000 g	---
STATUT	**CONFORME**	**N/A**

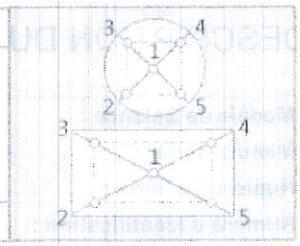

TEST DE LINÉARITÉ:

Méthode: Substitution Plage: 210 g Poids Test: 50 g Tolérance: 0.0002 g

Pré-Charge	**Avant Ajustement**	**Après Ajustement**
0.0000 g	50.0001 g	---
50.0000 g	50.0000 g	---
100.0000 g	50.0000 g	---
150.0000 g	50.0000 g	---
---	---	---
---	---	---
---	---	---
Résultats	**0.00007 g**	---
STATUT	**CONFORME**	**N/A**

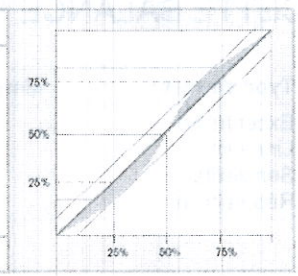

TEST DE SENSIBILITÉ:

Valeur de masse conventionnelle: 200.0001 g Tolérance: 0.0004 g Résultats: 0.00% < 0.10%

	Avant Ajustement	**Après Ajustement**
Lecture:	200.0001 g	---
Résultats:	**0.0000 g**	---
STATUT	**CONFORME**	**N/A**

$$S = \frac{\Delta W}{\Delta m}$$

DISPERSION
Laboratoire • Laboratory DIVISION • TRANSCAT CANADA

ACCREDITATION ISO 17025
CNN Portée Numéro 668

CERTIFICAT D'ÉTALONNAGE

9900 Chemin de la Côte-de-Liesse, Lachine, QC H8T 1A1
www.dispersion.ca 1.866.390.5066

Client :	Polytests	**No. du Certificat :**	**155-578412-181-1649**
Adresse :	695 B rue Gaudette	**Accrédtation CCN n. :**	668
	Saint-Jean-sur-Richelieu, QC	**Certification CLAS n. :**	2010-01
	J3B7S7	**Modèle de Balance :**	AR2140
		Date d'étalonnage :	11-12-2018
Méthode :	ISO 17025	**Date du prochain étalonnage :**	11-12-2019

TEST DE RÉPÉTABILITÉ:

AVANT AJUSTEMENT:

Charge Utilisée:
100.0000 g

Tolérance:
0.00010 g

Résolution d'affichage:
0.0001 g

Moyenne:
100.00003 g

Écart-type:
0.00005 g

#	Vide	Chargé	Différence
1	0.0000 g	100.0001 g	100.0001 g
2	0.0000 g	100.0001 g	100.0001 g
3	0.0000 g	100.0001 g	100.0001 g
4	0.0000 g	100.0000 g	100.0000 g
5	0.0000 g	100.0000 g	100.0000 g
6	0.0000 g	100.0000 g	100.0000 g
7	0.0000 g	100.0000 g	100.0000 g
8	0.0000 g	100.0000 g	100.0000 g
9	0.0000 g	100.0000 g	100.0000 g
10	0.0000 g	100.0000 g	100.0000 g

Statut : CONFORME

APRÈS AJUSTEMENT:

Charge Utilisée:

Tolérance:
0.00010 g

Résolution d'affichage:
0.0001 g

Moyenne:

Écart-type:

#	Vide	Chargé	Différence
1	---	---	---
2	---	---	---
3	---	---	---
4	---	---	---
5	---	---	---
6	---	---	---
7	---	---	---
8	---	---	---
9	---	---	---
10	---	---	---

Statut : **N/A**

DISPERSION
Laboratoire • Laboratory DIVISION • TRANSCAT CANADA

ACCREDITATION ISO 17025
CNN Portée Numéro 668

9900 Chemin de la Côte-de-Liesse, Lachine, QC H8T 1A1
www.dispersion.ca 1.866.390.5066

CERTIFICAT D'ÉTALONNAGE

INCERTITUDE AVANT AJUSTEMENT :

$$Uc = \sqrt{(u_{(cr)}{}^2 + s_p{}^2 + u_{(l)}{}^2 + u_{(dr)}{}^2 + u_{(s)}{}^2)}$$

u(cr) =	Incertitude reliée à l'étalon utilisé
Sp =	Incertitude de l'écart-type
u(l) =	Incertitude associée à la linéarité
u(dr) =	Incertitude associée à résolution si Sp = 0
u(s) =	Incertitude liée à la sensibilité (span)

Valeur	Incertitude	Incertitude (%)
12.5000 g	0.00016 g	0.001284 %
25.0000 g	0.00016 g	0.000642 %
50.0000 g	0.00016 g	0.000322 %
100.0000 g	0.00016 g	0.000162 %
200.0000 g	0.00023 g	0.000113 %

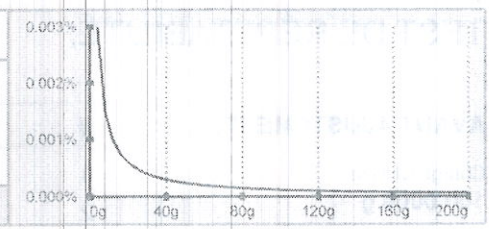

INCERTITUDE APRÈS AJUSTEMENT :

Valeur	Incertitude	Incertitude (%)
---	---	---
---	---	---
---	---	---
---	---	---

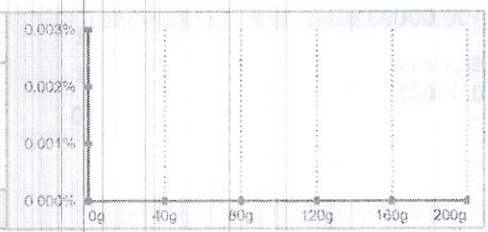

NOTES :

De ces valeurs d'incertitudes, seule la valeur surlignée est calculée selon ISO17025:2005, les autres étant estimées jusqu'au résultat de l'incertitude minimale. Dans le calcul de cette l'incertitude, l'écart-type utilisé est de 0,577d (où d est la précision d'affichage de la balance) lorsque cet écart-type est plus inférieur à 0,577d.

DISPERSION
Laboratoire • Laboratory DIVISION - TRANSCAT CANADA

ACCREDITATION ISO 17025
CNN Portée Numéro 668

9900 Chemin de la Côte-de-Liesse, Lachine, QC H8T 1A1
www.dispersion.ca 1.866.390.5066

CERTIFICAT D'ÉTALONNAGE

RÉFÉRENCE

ENSEMBLE DE RÉFÉRENCE:

Référence	No de série	Fabricant	Date d'étalonnage
1mg-5kg	DK000A213	Dispersion	16-03-2018

INCERTITUDES:

Les incertitudes que nous retrouvons comprennent :

1. *L'incertitude associée à l'opération de pesage.*
2. *L'incertitude associée à l'écart-type.*
3. *L'incertitude associée à l'étalon utilisé.*
4. *L'incertitude associée à la résolution de l'appareil.*

L'incertitude de l'opération de pesage comprend la reproductibilité à long terme.

Les incertitudes précisées dans ce rapport sont des incertitudes élargies représentant un niveau de confiance d'approximativement 95 %, obtenu en multipliant ensemble l'incertitude-type composée par un facteur de couverture de k = 2. Pour de plus amples renseignements, veuillez consulter la publication GUM (Guide pour l'expression de l'incertitude de mesure, édition de 1995).

TRAÇABILITÉ

Le Service d'évaluation de laboratoires d'étalonnage (CLAS) du Conseil national de recherches du Canada (CNRC) a évalué et a certifié des capacités d'étalonnage spécifiques de ce laboratoire et leur traçabilité à des étalons nationaux de mesure reconnus et au Système international d'unités (SI). Ce certificat d'étalonnage est émis conformément aux conditions de certification accordées par CLAS et aux conditions d'accréditation accordées par le Conseil canadien des normes (CCN). Le CLAS pas plus que le CCN ne peut garantir l'exactitude des étalonnages individuels effectués par des laboratoires accrédités.

REMARQUES:

DISPERSION
Laboratoire • Laboratory DIVISION • TRANSCAT CANADA

CLAS
NRC CNRC
CLAS 2010-01

CERTIFICAT D'ÉTALONNAGE

9900 Chemin de la Côte-de-Liesse, Lachine, QC H8T 1A1
www.dispersion.ca 1.866.390.5066

Client :	Polytests	**No. du Certificat :**	**152-4BB901-181**
Adresse :	695 B rue Gaudette St-Jean-sur-Richelieu, QC J3B7S7	**Date d'étalonnage :**	09-01-2018

Technicien:
Simeonidis, Georgios

David Llorens, Responsable Qualité

DESCRIPTION DU SERVICE:

Description des masses :	ASTM E617	**Date d'approbation :**	09-01-2018
Classe de précision :	ASTM 6	**Date prochain étalonnage :**	09-01-2023
Densité :	7.95g/cm³	**Accrédtation CCN n. :**	668
Identification (si unique) :	EM-090	**Certification CLAS n. :**	2010-01

Condition d'essai :	Temp °C:	21.17	Pression kPa:	101.475	Humidité:	48.665

NOTES:

Pour l'étalonnage des masses, nous utilisons la procédure "Comparaison individuelle" PDL-09-MG-001 et la procédure "Détermination des incertitudes" PDL-09-MG-002. Le droit d'auteur du présent certificat appartient au laboratoire délivreur et doit être reproduit intégralement, à moins d'une autorisation écrite du laboratoire délivreur.

REMARQUES:

11 JANV. 2018

DISPERSION
Laboratoire • Laboratory DIVISION • TRANSCAT CANADA

CLAS 2010-01

CERTIFICAT D'ÉTALONNAGE

9900 Chemin de la Côte-de-Liesse, Lachine, QC H8T 1A1
www.dispersion.ca 1.866.390.5066

Client :	Polytests	**No. du Certificat :**	**152-4BB901-181**
Adresse :	695 B rue Gaudette	**Accrédtation CCN n. :**	668
	St-Jean-sur-Richelieu, QC	**Certification CLAS n. :**	2010-01
	J3B7S7	**Classe d'exactitude :**	ASTM 6
		Date d'étalonnage :	09-01-2018
Masse :	2 kg	**Date du prochain étalonnage :**	09-01-2023

RÉSULTAT DE L'ÉTALONNAGE, MASSE CONVENTIONNELLE:

Valeur Nominale	No de série	No d'inventaire	Masse conventionnelle	Masse conventionnelle après ajustement	Tolérance ± (mg)	Incertitudes ± (mg)
2 kg		EM-090	2.0001538 kg		200 mg	2.0 mg

S.P

DISPERSION
Laboratoire • Laboratory DIVISION • TRANSCAT CANADA

CLAS
NRC CNRC
CLAS 2010-01

CERTIFICAT D'ÉTALONNAGE

9900 Chemin de la Côte-de-Liesse, Lachine, QC H8T 1A1
www.dispersion.ca 1.866.390.5066

Client :	Polytests	**No. du Certificat :**	**152-4BB901-181**
Adresse :	695 B rue Gaudette	**Accréditation CCN n. :**	668
	St-Jean-sur-Richelieu, QC	**Certification CLAS n. :**	2010-01
	J3B7S7	**Classe d'exactitude :**	ASTM 6
		Date d'étalonnage :	09-01-2018
Masse :	2 kg	**Date du prochain étalonnage :**	09-01-2023

RÉSULTAT DE L'ÉTALONNAGE DES POIDS, CORRECTIONS:

Valeur Nominale	No de série	No d'inventaire	Masse conventionnelle Correction	Masse conventionnelle Correction après ajustement	Tolérance ± (mg)	Incertitudes ± (mg)
2 kg		EM-090	153.8 mg		200 mg	2.0 mg

CERTIFICAT D'ÉTALONNAGE

9900 Chemin de la Côte-de-Liesse, Lachine, QC H8T 1A1
www.dispersion.ca 1.866.390.5066

BALANCES UTILISÉES

Pour l'étalonnage manuel :

> 5 kg à 25 kg :	Mettler Toledo XP32003L, SNR 1123271214, max. 32100 g, d = 0.005 g
> 1 kg à 5 kg	Mettler Toledo PR5003, SNR 1115311634, max. 5100 g, d = 0.001 g
> 300 g à 2 kg :	Mettler Toledo XP2004S, SNR B131185222, max. 2100 g, d = 0.1 mg
> 100 g à 200 g :	Mettler Toledo AT201 SNR BA1115230146, max. 205 g, d = 0.01 mg
> 5 g à 100 g :	Mettler Toledo AX106 SNR 1127063924, max. 111 g, d = 1 µg
1 mg à 5 g :	Mettler UMX5, SNR 1121103055, max. 5.1 g, d = 0.1 µg

Pour l'étalonnage automatisé :

> 200 g à 1 kg :	Mettler Toledo AX1005 SNR 1127063210, max. 1109 g, d = 0.01 mg
> 5 g à 100 g :	Mettler Toledo AX106 SNR 1120143015, max. 111 g, d = 1 µg
1 mg à 5 g :	Mettler UMX5, SNR 1125140561, max. 5.1 g, d = 0.1 µg

Les balances sont vérifiées selon notre procédure de contrôle périodique PDL-11-MG-001.

INCERTITUDES:

Les incertitudes que nous retrouvons comprennent :

1. *L'incertitude associée à l'opération de pesage.*
2. *L'incertitude associée à la densité de l'air.*
3. *L'incertitude associée à l'étalon utilisé.*
4. *L'incertitude associée à la densité de la masse à être étalonnée.*

L'incertitude de l'opération de pesage comprend la reproductibilité à long terme.

Les incertitudes précisées dans ce rapport sont des incertitudes élargies représentant un niveau de confiance d'approximativement 95 %, obtenu en multipliant ensemble l'incertitude-type composée par un facteur de couverture de k = 2. Pour de plus amples renseignements, veuillez consulter la publication GUM (Guide pour l'expression de l'incertitude de mesure, édition de 1995).

TRAÇABILITÉ

Le Service d'évaluation de laboratoires d'étalonnage (CLAS) du Conseil national de recherches du Canada (CNRC) a évalué et a certifié des capacités d'étalonnage spécifiques de ce laboratoire et leur traçabilité à des étalons nationaux de mesure reconnus et au Système international d'unités (SI). Ce certificat d'étalonnage est émis conformément aux conditions de certification accordées par CLAS et aux conditions d'accréditation accordées par le Conseil canadien des normes (CCN). Le CLAS pas plus que le CCN ne peut garantir l'exactitude des étalonnages individuels effectués par des laboratoires accrédités.

S.P

CERTIFICAT D'ÉTALONNAGE

9900 Chemin de la Côte-de-Liesse, Lachine, QC H8T 1A1
www.dispersion.ca 1.866.390.5066

RÉFÉRENCES UTILISÉES

Poids	No de série	Fabricant	Date d'étalonnage	Date due
20kg	69976	Troemner	30-05-2017	30-05-2018
5kg	129099	Mettler Toledo	02-09-2017	02-09-2018
5kg	96-0888-50-3	Denver Instrument Company	02-09-2017	02-09-2018
2kg	129098	Mettler Toledo	02-09-2017	02-09-2018
2kg	96-0888-50-3	Denver Instrument Company	02-09-2017	02-09-2018
300g	96-0888-50-2	Denver Instrument Company	02-09-2017	02-09-2018
1kg - 1mg	MT-01	Mettler Toledo	02-09-2017	02-09-2018

ÉTALONS CERTFIÉS PAR LE CNRC(**Référence NRC MS-2016-0021**)

Poids	No de série	Fabricant	Date d'étalonnage	Date due
100g	95170	Mettler Toledo	17-10-2016	17-10-2018
10kg	129100	Mettler Toledo	17-10-2016	17-10-2018
1kg	95171	Mettler Toledo	17-10-2016	17-10-2018

RÉFÉRENCES DE LA STATION ROBOTISÉE

Poids	No de série	Fabricant	Date d'étalonnage	Date due
1kg - 1mg	DK000A132	Laboratoire Dispersion	01-08-2017	01-08-2018

Rapport d'étalonnage No. CA0124-511-092818

Mettler Toledo
Service Business Unit Industrial
1900 Polaris Parkway
Columbus, Ohio 43240
1-800-METTLER

Accrédité par l'American Association for Laboratory Accreditation (A2LA)
CERT.CALIBRATION #1902.02

METTLER TOLEDO

ISO 9001 Registered
ANSI/NCSL Z540-1 Accrédité

Certificat d'étalonnage

Client

Société :	Services Polytests		
Adresse :	695-B Rue Gaudette		
Ville :	Saint-Jean-Sur-Richelieu	*État/Province :*	Quebec
Code postal :	J3B 7S7	Astea Customer ID:	301288671

Instrument

Constructeur :	RICE LAKE	*Modèle de terminal :*	IQ+355
Modèle :	4x4HP-10k	*# série du terminal:*	164851
No de série :	C18395	*# série de l'imprimant*	N/A
Capacité :	400 kg		N/A
Résolution :	0.05 kg	*Nbre de Divisions:*	8000
Classe :	III	*Procédure utilisée :*	NIST Handbook 44
No./ID d'inventaire:	EM114		
Procédure:	Le présent certificat est émis conformément aux conditions de certification accordées par l'A2LA, en vertu de la norme ISO/IEC 17025. A2LA a évalué la capacité de mesure du laboratoire et la traçabilité des normes nationales reconnues.		

Date de calibrage :	28-Sep-2018	*Date, prochaine Cal.*	30-Sep-2019
Signataire autorisé (A2LA) :	Pier-Hugues Riopel	*Signature:*	ELECTRONIC SIGNATURE

Étalons de travail

Retracabilité: Les poids de test utilisés se réfèrent au National Institute of Standards and Technology.

Jeu de poids no :	*Traçabilité NIST No.:*	*Classe ASTM/OIML*	*Date d'étalonnage :*	*Date proch. étalonnage*
160941929	4350-8126171	Temperature Kit	18-Nov-2016	18-Nov-2018
42273	M17-0562	M1	23-Jan-2018	23-Jan-2019
T101-T150 (20kg)	1412537	M1	19-Apr-2018	19-Apr-2019

2018-10-02

© METTLER TOLEDO
Toute reproduction partielle du certificat est interdite, sous réserve du consentement écrit préalable du laboratoire émetteur.

METTLER TOLEDO

Résultats de mesure

La température : 22 °C

Les conditions ambiantes ont été vérifiées afin d'assurer l'exactitude de l'étalonnage.

Test de variation

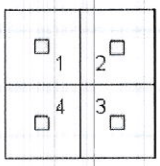

Poids Appliqués	*Position*	*Avant Réglage* *Valeur lue*
1: 100.00 kg	*Position 1*	100.05 kg
2: 100.00 kg	*Position 2*	100.05 kg
3: 100.00 kg	*Position 3*	99.95 kg
4: 100.00 kg	*Position 4*	99.95 kg
Erreur maximum :		0.10 kg
Max Erreur Admissible :		0.10 kg

Linéarité

	Avant réglage *Poids Appliqués*	*Valeur lue*	*Erreur*		*Erreur admissible*	*Dans la Tolérance*
Zero 1	0.00 kg	0.00 kg	0.00 kg	0 d	1 d	YES
2	0.50 kg	0.50 kg	0.00 kg	0 d	1 d	YES
3	2.00 kg	2.00 kg	0.00 kg	0 d	1 d	YES
4	10.00 kg	10.05 kg	0.05 kg	1 d	1 d	YES
Max 5	100.00 kg	100.00 kg	0.00 kg	0 d	2 d	YES

☐ Méthode de substitution utilisée

Un réglage de la balance a été requis
Si non, les résultats "avant réglage" correspondent aux résultats tel que laissé.

☐ OUI ☑ NON

© METTLER TOLEDO

Toute reproduction partielle du certificat est interdite, sous réserve du consentement écrit préalable du laboratoire émetteur.

Répétabilité

Poids appliqués : 2.00 kg

	Chargé	*Vide*	*Différence*
1	2.00 kg	0.00 kg	2 kg
2	2.00 kg	0.00 kg	2 kg
3	2.00 kg	0.00 kg	2 kg
	Erreur maximale :	0.00 kg	0.0 d
	Tolérance :	0.05 kg	1 d

Incertitude

Mesure de l'incertitude = 0.029 kg

L'incertitude de mesure représente les incertitudes étendues selon un facteur de sécurité K=2 générant un niveau de confiance approximatif de 95 %. Des dispositions doivent être prises en matière d'environnement au lieu d'étalonnage, d'incertitude induite par l'article en étalonnage et d'effets indésirables causés par le transport du matériel d'étalonnage. Ces facteurs pourraient entraîner une incertitude plus grande que le CMC.

© METTLER TOLEDO

Toute reproduction partielle du certificat est interdite, sous réserve du consentement écrit préalable du laboratoire émetteur.

METTLER TOLEDO

Certificat de Pesée Minimale

Incertitude de mesure élargie

U = Uo
Ur1 = 0.03 kg

Exemple d'incertitudes élargies pour différentes valeurs de poids net :

Poids Net Affiché	*Incertitude de mesure élargie*	
0.4 kg	0.03 kg	7.25000 %
4 kg	0.03 kg	0.72500 %
40 kg	0.03 kg	0.07250 %
200 kg	0.03 kg	0.01450 %
400 kg	0.03 kg	0.00725 %

Explication sur le tableau de pesée minimale

Les valeurs du poids net affiché indiquées dans le tableau suivant sont les valeurs des pesées minimales. Pour ces valeurs, l'incertitude élargie de mesure, multipliée par un Facteur de Sécurité (1, 2, 3 ou 5) est inférieure ou égale à l'Erreur Relative R

Tableau des Pesées Minimales pour différentes Erreurs Relatives et différents Facteurs de Sécurité

	Facteur de Sécurité FS			
Erreur Relative Requise	*1x FS = 1*	*2x FS = 2*	*3x FS = 3*	*5x FS = 5*
0.1 %	29.00 kg	58.00 kg	87.00 kg	145.00 kg
0.2 %	14.50 kg	29.00 kg	43.50 kg	72.50 kg
0.5 %	5.80 kg	11.60 kg	17.40 kg	29.00 kg
1 %	2.90 kg	5.80 kg	8.70 kg	14.50 kg
2 %	1.45 kg	2.90 kg	4.35 kg	7.25 kg
5 %	0.58 kg	1.16 kg	1.74 kg	2.90 kg

Remarques sur les valeurs de pesée minimale du tableau ci-dessus :

1. "N/A" est indiqué dans le tableau quand aucune valeur appropriée n'a pu être calculée.
2. Pour les instrument à étendues et échelons multiples, les valeurs indiquées dans le tableau ci-dessus s'appliquent à la plus petite étendue de mesure.
3. METTLER TOLEDO ne peut être tenu pour responsable du choix retenu concernant la sélection de l'Erreur Relative Requise ou du Facteur de Sécurité.
4. Le client veille à ce que les paramètres de réglage restent identiques à ceux utilisés pour l'établissement de ce Constat de Vérification Standard.
5. Le client veille à ce que l'environnement demeure identique aux conditions de travail retenues pour l'établissement de ce Constat de Vérification Standard.

Remarques

None.

© METTLER TOLEDO

Toute reproduction partielle du certificat est interdite, sous réserve du consentement écrit préalable du laboratoire émetteur.

Instrumentation Saint•Laurent inc.
Accrédité ISO 17025

CLAS NRC-CNRC
CLAS 2010-02

SCC Accredited LAB
LAB Accrédité CCN
N°669

80 rue de la montagne
St-Joseph du lac
(Québec), J0N 1M0
Tél: (450) 473-6169
Fax: (450) 473-5207
Email: inst.st-laurent@videotron.ca

CERTIFICAT D'ÉTALONNAGE

No.Certificat: CE-EM-126 06/03/18

CLIENT	
Compagnie:	Services Polytests Inc
Adresse:	695 B rue Gaudette
	St-Jean-sur-Richelieu, Québec, J3B 7S7

SPÉCIFICATION DE CALIBRATION	
Procédure de service:	4IN9106
Précision requise:	+\- 1"Hg
Fréquence d'étalonnage: (jours)	365

SPÉCIFICATION DE L'INSTRUMENT			
Type d'instrument:	Manomètre	Type d'entrée:	Pression
Manufacturier:	Dwyer	Type de sortie:	Digitale
No. Model:	DPG200	Type de mesure:	Pression
No. Série:	N.A.	Gamme:	0-28"Hg
Emplacement:	N.A.	No. Machine:	N.A.

SPÉCIFICATION DE L'ÉTALON			
Étalon Utilisé:	Crystal XP2i	No. du certificat d'étalonnage:	2017004083
No. Série:	258139	Dernière date d'étalonnage:	4-Jul-17
Certificat fait par:	Alpha Controls	Prochaine date d'étalonnage:	4-Jul-18
Commentaire:			

RÉSULTAT D'ÉTALONNAGE

Entrée Source	Valeur Donnée	Valeur Actuelle	Erreur de Déviation	Valeur après Étalonnage	Incertitude Élargie	Commentaire
0.00 "Hg	0.00 "Hg	0.00 "Hg	0.00 "Hg	0.00 "Hg	1 "Hg	Vérification indicateur
-7.50 "Hg	-7.50 "Hg	-7.61 "Hg	-0.11 "Hg	-7.61 "Hg	1 "Hg	Vérification indicateur
-15.00 "Hg	-15.00 "Hg	-15.23 "Hg	-0.23 "Hg	-15.23 "Hg	1 "Hg	Vérification indicateur
-22.50 "Hg	-22.50 "Hg	-22.85 "Hg	-0.35 "Hg	-22.85 "Hg	1 "Hg	Vérification indicateur
-28.00 "Hg	-28.00 "Hg	-28.45 "Hg	-0.45 "Hg	-28.45 "Hg	1 "Hg	Vérification indicateur
0.00 "Hg	10.0000 V.DC.	10.0516 V.DC.	+0.0600 V.DC.	10.0600 V.DC.	0.5 V.DC.	Vérification sortie analogique
-7.50 "Hg	8.0000 V.DC.	8.0377 V.DC.	+0.0377 V.DC.	8.0377 V.DC.	0.5 V.DC.	Vérification sortie analogique
-15.00 "Hg	6.0000 V.DC.	6.0080 V.DC.	+0.0080 V.DC.	6.0080 V.DC.	0.5 V.DC.	Vérification sortie analogique
-22.50 "Hg	4.0000 V.DC.	3.9666 V.DC.	-0.0333 V.DC.	3.9666 V.DC.	0.5 V.DC.	Vérification sortie analogique
-28.00 "Hg	2.5333 V.DC.	2.4615 V.DC.	-0.0718 V.DC.	2.4615 V.DC.	0.5 V.DC.	Vérification sortie analogique

Conditions Environnementales: Température: 20 °C Humidité: 33 %RH

Type d'Étalonnage:

Instrumentation St-Laurent Inc. Certifie que l'instrument ci-haut, rencontre ou excède les spécifications établies par le fabriquant. Le système qualité de l'entreprise est conforme aux exigences de la norme ISO 17025 et les étalons utilisés pour effectuer l'étalonnage est retraçable au CNRC et/ou au NIST. Le degré d'incertitude est basé sur un niveau de confiance=95%, K=2.

DATE D'ÉTALONNAGE / ÉMISSION DU CERTIFICAT	
Date d'Étalonnage:	6 Mars 2018
Date du prochain Étalonnage:	6 Mars 2019
Date d'émission du certificat:	6 Mars 2018

CONFORMITÉ D'ÉTALONNAGE	Avant	Après
Conforme:	X	X
Non Conforme:		

Le Service d'évaluation des laboratoires d'étalonnage (CLAS) du Conseil national de recherches du Canada (CNRC) a évalué et certifié la capacité d'étalonnage du laboratoire et la traçabilité au Système international d'unités (SI) ou à des étalons acceptables selon le CLAS. Le présent certificat d'étalonnage est délivré conformément aux conditions de certification du CLAS et aux conditions d'accréditation du Conseil canadien des normes (CCN). Numéro d'accréditation du CCN: # 669. Le CLAS et le CCN ne garantissent pas l'exactitude des étalonnages individuels effectués par les laboratoires accrédités.

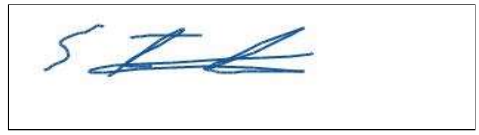

Stéphane - Technicien

5F09106

Le droit d'auteur du présent certificat appartient à Inst. St-Laurent Inc et doit être reproduit intégralement, à moins d'une autorisation écrite de Inst. St-Laurent Inc.

Instrumentation Saint•Laurent inc.
Accrédité ISO 17025

CLAS NRC-CNRC
CLAS 2010-02

SCC Accredited LAB
LAB Accrédité CCN
N°669

80 rue de la montagne
St-Joseph du lac
(Québec), J0N 1M0
Tél: (450) 473-6169
Fax: (450) 473-5207
Email: inst.st-laurent@videotron.ca

CERTIFICAT D'ÉTALONNAGE

No.Certificat: CE-EM-127 06/03/18

CLIENT	
Compagnie:	Services Polytests Inc
Adresse:	695 B rue Gaudette
	St-Jean-sur-Richelieu, Québec, J3B 7S7

SPÉCIFICATION DE CALIBRATION	
Procédure de service:	4IN9106
Précision requise:	+\- 1"Hg
Fréquence d'étalonnage: (jours)	365

SPÉCIFICATION DE L'INSTRUMENT			
Type d'instrument:	Manomètre	Type d'entrée:	Pression
Manufacturier:	Dwyer	Type de sortie:	Digitale
No. Model:	DPG200	Type de mesure:	Pression
No. Série:	N.A.	Gamme:	0-28"Hg
Emplacement:	N.A.	No. Machine:	N.A.

SPÉCIFICATION DE L'ÉTALON			
Étalon Utilisé:	Crystal XP2i	No. du certificat d'étalonnage:	2017004083
No. Série:	258139	Dernière date d'étalonnage:	4-Jul-17
Certificat fait par:	Alpha Controls	Prochaine date d'étalonnage:	4-Jul-18
Commentaire:			

RÉSULTAT D'ÉTALONNAGE

Entrée Source	Valeur Donnée	Valeur Actuelle	Erreur de Déviation	Valeur après Étalonnage	Incertitude Élargie	Commentaire
0.00 "Hg	0.00 "Hg	0.00 "Hg	0.00 "Hg	0.00 "Hg	1 "Hg	Vérification indicateur
-7.50 "Hg	-7.50 "Hg	-7.52 "Hg	-0.03 "Hg	-7.52 "Hg	1 "Hg	Vérification indicateur
-15.00 "Hg	-15.00 "Hg	-15.05 "Hg	-0.05 "Hg	-15.05 "Hg	1 "Hg	Vérification indicateur
-22.50 "Hg	-22.50 "Hg	-22.60 "Hg	-0.10 "Hg	-22.60 "Hg	1 "Hg	Vérification indicateur
-28.00 "Hg	-28.00 "Hg	-28.11 "Hg	-0.11 "Hg	-28.11 "Hg	1 "Hg	Vérification indicateur
0.00 "Hg	10.0000 V.DC.	10.0048 V.DC.	+0.0048 V.DC.	10.0048 V.DC.	0.01 V.DC.	Vérification sortie analogique
-7.50 "Hg	8.0000 V.DC.	8.0156 V.DC.	+0.0156 V.DC.	8.0156 V.DC.	0.01 V.DC.	Vérification sortie analogique
-15.00 "Hg	6.0000 V.DC.	6.0141 V.DC.	+0.0141 V.DC.	6.0141 V.DC.	0.01 V.DC.	Vérification sortie analogique
-22.50 "Hg	4.0000 V.DC.	3.9973 V.DC.	-0.0027 V.DC.	3.9973 V.DC.	0.01 V.DC.	Vérification sortie analogique
-28.00 "Hg	2.5333 V.DC.	2.5129 V.DC.	-0.0204 V.DC.	2.5129 V.DC.	0.01 V.DC.	Vérification sortie analogique

Conditions Environnementales: Température: 20 °C Humidité: 33 %RH

Type d'Étalonnage:

Instrumentation St-Laurent Inc. Certifie que l'instrument ci-haut, rencontre ou excède les spécifications établies par le fabriquant. Le système qualité de l'entreprise est conforme aux exigences de la norme ISO 17025 et les étalons utilisés pour effectuer l'étalonnage est retraçable au CNRC et/ou au NIST. Le degré d'incertitude est basé sur un niveau de confiance=95%, K=2.

DATE D'ÉTALONNAGE / ÉMISSION DU CERTIFICAT	
Date d'Étalonnage:	6 Mars 2018
Date du prochain Étalonnage:	6 Mars 2019
Date d'émission du certificat:	6 Mars 2018

CONFORMITÉ D'ÉTALONNAGE	Avant	Après
Conforme:	X	X
Non Conforme:		

Le Service d'évaluation des laboratoires d'étalonnage (CLAS) du Conseil national de recherches du Canada (CNRC) a évalué et certifié la capacité d'étalonnage du laboratoire et la traçabilité au Système international d'unités (SI) ou à des étalons acceptables selon le CLAS. Le présent certificat d'étalonnage est délivré conformément aux conditions de certification du CLAS et aux conditions d'accréditation du Conseil canadien des normes (CCN). Numéro d'accréditation du CCN: # 669. Le CLAS et le CCN ne garantissent pas l'exactitude des étalonnages individuels effectués par les laboratoires accrédités.

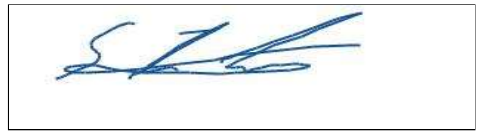

Stéphane - Technicien

5F09106

Le droit d'auteur du présent certificat appartient à Inst. St-Laurent Inc et doit être reproduit intégralement, à moins d'une autorisation écrite de Inst. St-Laurent Inc.

DISPERSION
Laboratoire • Laboratory DIVISION • TRANSCAT CANADA

CLAS
ARC·CNRC
CLAS 2010-01

CERTIFICAT D'ÉTALONNAGE

9900 Chemin de la Côte-de-Liesse, Lachine, QC H8T 1A1
www.dispersion.ca 1.866.390.5066

Client :	Polytests	**No. du Certificat :**	**152-4BB901-182**
Adresse :	695 B rue Gaudette St-Jean-sur-Richelieu, QC J3B7S7	**Date d'étalonnage :**	09-01-2018

Technicien:
Simeonidis, Georgios

David Llorens, Responsable Qualité

DESCRIPTION DU SERVICE:

Description des masses :	ASTM E617	**Date d'approbation :**	09-01-2018
Classe de précision :	ASTM 1	**Date prochain étalonnage :**	09-01-2023
Densité :	7.95g/cm³	**Accrédtation CCN n. :**	668
Identification (si unique) :	(items multiples)	**Certification CLAS n. :**	2010-01

Condition d'essai :	Temp °C:	21.265	Pression kPa:	101.565	Humidité:	49.58

NOTES:

Pour l'étalonnage des masses, nous utilisons la procédure "Comparaison individuelle" PDL-09-MG-001 et la procédure "Détermination des incertitudes" PDL-09-MG-002. Le droit d'auteur du présent certificat appartient au laboratoire délivreur et doit être reproduit intégralement, à moins d'une autorisation écrite du laboratoire délivreur.

REMARQUES:

11 JAN. 2018

DISPERSION
Laboratoire • Laboratory DIVISION • TRANSCAT CANADA

CLAS 2010-01

CERTIFICAT D'ÉTALONNAGE

9900 Chemin de la Côte-de-Liesse, Lachine, QC H8T 1A1
www.dispersion.ca 1.866.390.5066

Client :	Polytests	**No. du Certificat :**	**152-4BB901-182**
Adresse :	695 B rue Gaudette	**Accréditation CCN n. :**	668
	St-Jean-sur-Richelieu, QC	**Certification CLAS n. :**	2010-01
	J3B7S7	**Classe d'exactitude :**	ASTM 1
		Date d'étalonnage :	09-01-2018
Masse :	100 mg - 200 g	**Date du prochain étalonnage :**	09-01-2023

RÉSULTAT DE L'ÉTALONNAGE, MASSE CONVENTIONNELLE:

Valeur Nominale	No de série	No d'inventaire	Masse conventionnelle	Masse conventionnelle après ajustement	Tolérance ± (mg)	Incertitudes ± (mg)
100 mg	1000014200	EM-128	99.9993 mg		0.010 mg	0.002 mg
200 g	1000026013	EM-129	199.99962 g		0.50 mg	0.10 mg

D.P.

DISPERSION
Laboratoire • Laboratory DIVISION • TRANSCAT CANADA

CLAS
NRC·CNRC
CLAS 2010-01

9900 Chemin de la Côte-de-Liesse, Lachine, QC H8T 1A1
www.dispersion.ca 1.866.390.5066

CERTIFICAT D'ÉTALONNAGE

Client :	Polytests	**No. du Certificat :**	**152-4BB901-182**
Adresse :	695 B rue Gaudette	**Accrédtation CCN n. :**	668
	St-Jean-sur-Richelieu, QC	**Certification CLAS n. :**	2010-01
	J3B7S7	**Classe d'exactitude :**	ASTM 1
		Date d'étalonnage :	09-01-2018
Masse :	100 mg - 200 g	**Date du prochain étalonnage :**	09-01-2023

RÉSULTAT DE L'ÉTALONNAGE DES POIDS, CORRECTIONS:

Valeur Nominale	No de série	No d'inventaire	Masse conventionnelle Correction	Masse conventionnelle Correction après ajustement	Tolérance ± (mg)	Incertitudes ± (mg)
100 mg	1000014200	EM-128	-0.0007 mg		0.010 mg	0.002 mg
200 g	1000026013	EM-129	-0.38 mg		0.50 mg	0.10 mg

D.P.

CERTIFICAT D'ÉTALONNAGE

9900 Chemin de la Côte-de-Liesse, Lachine, QC H8T 1A1
www.dispersion.ca 1.866.390.5066

BALANCES UTILISÉES

Pour l'étalonnage manuel :

> 5 kg à 25 kg :	Mettler Toledo XP32003L, SNR 1123271214, max. 32100 g, d = 0.005 g
> 1 kg à 5 kg	Mettler Toledo PR5003, SNR 1115311634, max. 5100 g, d = 0.001 g
> 300 g à 2 kg :	Mettler Toledo XP2004S, SNR B131185222, max. 2100 g, d = 0.1 mg
> 100 g à 200 g :	Mettler Toledo AT201 SNR BA1115230146, max. 205 g, d = 0.01 mg
> 5 g à 100 g :	Mettler Toledo AX106 SNR 1127063924, max. 111 g, d = 1 µg
1 mg à 5 g :	Mettler UMX5, SNR 1121103055, max. 5.1 g, d = 0.1 µg

Pour l'étalonnage automatisé :

> 200 g à 1 kg :	Mettler Toledo AX1005 SNR 1127063210, max. 1109 g, d = 0.01 mg
> 5 g à 100 g :	Mettler Toledo AX106 SNR 1120143015, max. 111 g, d = 1 µg
1 mg à 5 g :	Mettler UMX5, SNR 1125140561, max. 5.1 g, d = 0.1 µg

Les balances sont vérifiées selon notre procédure de contrôle périodique PDL-11-MG-001.

INCERTITUDES:

Les incertitudes que nous retrouvons comprennent :

1. *L'incertitude associée à l'opération de pesage.*
2. *L'incertitude associée à la densité de l'air.*
3. *L'incertitude associée à l'étalon utilisé.*
4. *L'incertitude associée à la densité de la masse à être étalonnée.*

L'incertitude de l'opération de pesage comprend la reproductibilité à long terme.

Les incertitudes précisées dans ce rapport sont des incertitudes élargies représentant un niveau de confiance d'approximativement 95 %, obtenu en multipliant ensemble l'incertitude-type composée par un facteur de couverture de k = 2. Pour de plus amples renseignements, veuillez consulter la publication GUM (Guide pour l'expression de l'incertitude de mesure, édition de 1995).

TRAÇABILITÉ

Le Service d'évaluation de laboratoires d'étalonnage (CLAS) du Conseil national de recherches du Canada (CNRC) a évalué et a certifié des capacités d'étalonnage spécifiques de ce laboratoire et leur traçabilité à des étalons nationaux de mesure reconnus et au Système international d'unités (SI). Ce certificat d'étalonnage est émis conformément aux conditions de certification accordées par CLAS et aux conditions d'accréditation accordées par le Conseil canadien des normes (CCN). Le CLAS pas plus que le CCN ne peut garantir l'exactitude des étalonnages individuels effectués par des laboratoires accrédités.

DISPERSION
Laboratoire • Laboratory DIVISION • TRANSCAT CANADA

CLAS
NRC CNRC
CLAS 2010-01

CERTIFICAT D'ÉTALONNAGE

9900 Chemin de la Côte-de-Liesse, Lachine, QC H8T 1A1
www.dispersion.ca 1.866.390.5066

RÉFÉRENCES UTILISÉES

Poids	No de série	Fabricant	Date d'étalonnage	Date due
20kg	69976	Troemner	30-05-2017	30-05-2018
5kg	129099	Mettler Toledo	02-09-2017	02-09-2018
5kg	96-0888-50-3	Denver Instrument Company	02-09-2017	02-09-2018
2kg	129098	Mettler Toledo	02-09-2017	02-09-2018
2kg	96-0888-50-3	Denver Instrument Company	02-09-2017	02-09-2018
300g	96-0888-50-2	Denver Instrument Company	02-09-2017	02-09-2018
1kg - 1mg	MT-01	Mettler Toledo	02-09-2017	02-09-2018

ÉTALONS CERTFIÉS PAR LE CNRC(**Référence NRC MS-2016-0021**)

Poids	No de série	Fabricant	Date d'étalonnage	Date due
100g	95170	Mettler Toledo	17-10-2016	17-10-2018
10kg	129100	Mettler Toledo	17-10-2016	17-10-2018
1kg	95171	Mettler Toledo	17-10-2016	17-10-2018

RÉFÉRENCES DE LA STATION ROBOTISÉE

Poids	No de série	Fabricant	Date d'étalonnage	Date due
1kg - 1mg	DK000A132	Laboratoire Dispersion	01-08-2017	01-08-2018

A.P.

Instrumentation Saint•Laurent inc.
Accrédité ISO 17025

CLAS NRC-CNRC
CLAS 2010-02

SCC Accredited LAB
LAB Accrédité CCN
N°669

80 rue de la montagne
St-Joseph du lac
(Québec), J0N 1M0
Tél: (450) 473-6169
Fax: (450) 473-5207
Email: inst.st-laurent@videotron.ca

CERTIFICAT D'ÉTALONNAGE

No.Certificat: CE-EM-001 06/03/18

CLIENT	
Compagnie:	Services Polytests Inc
Adresse:	695 B rue Gaudette
	St-Jean-sur-Richelieu, Québec, J3B 7S7

SPÉCIFICATION DE CALIBRATION	
Procédure de service:	4IN9101
Précision requise:	+\- 2.0°C
Fréquence d'étalonnage: (jours)	365

SPÉCIFICATION DE L'INSTRUMENT			
Type d'instrument:	Enregistreur	Type d'entrée:	Temp
Manufacturier:	Fluke	Type de sortie:	Digitale
No. Model:	52-II	Type de mesure:	Température
No. Série:	90630037	Gamme:	Divers
Emplacement:	N.A.	No. Machine:	N.A.

SPÉCIFICATION DE L'ÉTALON			
Étalon Utilisé:	Fluke 744	No. du certificat d'étalonnage:	2017004079
No. Série:	7798010	Dernière date d'étalonnage:	5-Jul-17
Certificat fait par:	Alpha Controls	Prochaine date d'étalonnage:	5-Jul-18
Commentaire:			

RÉSULTAT D'ÉTALONNAGE

Entrée Source	Valeur Donnée	Valeur Actuelle	Erreur de Déviation	Valeur après Étalonnage	Incertitude Élargie	Commentaire
0.0 °C	0.0 °C	-0.1 °C	-0.1 °C	-0.1 °C	1.0 °C	T1 typeJ
125.0 °C	125.0 °C	125.0 °C	0.0 °C	125.0 °C	1.0 °C	T1 typeJ
250.0 °C	250.0 °C	250.0 °C	0.0 °C	250.0 °C	1.0 °C	T1 typeJ
375.0 °C	375.0 °C	374.9 °C	-0.1 °C	374.9 °C	1.0 °C	T1 typeJ
500.0 °C	500.0 °C	499.9 °C	-0.1 °C	499.9 °C	1.0 °C	T1 typeJ
0.0 °C	0.0 °C	0.0 °C	0.0 °C	0.0 °C	1.0 °C	T2 typeJ
125.0 °C	125.0 °C	125.0 °C	0.0 °C	125.0 °C	1.0 °C	T2 typeJ
250.0 °C	250.0 °C	250.0 °C	0.0 °C	250.0 °C	1.0 °C	T2 typeJ
375.0 °C	375.0 °C	374.9 °C	-0.1 °C	374.9 °C	1.0 °C	T2 typeJ
500.0 °C	500.0 °C	500.0 °C	0.0 °C	500.0 °C	1.0 °C	T2 typeJ
0.0 °C	0.0 °C	0.0 °C	0.0 °C	0.0 °C	1.0 °C	T1 typeK
125.0 °C	125.0 °C	125.0 °C	0.0 °C	125.0 °C	1.0 °C	T1 typeK
250.0 °C	250.0 °C	250.0 °C	0.0 °C	250.0 °C	1.0 °C	T1 typeK
375.0 °C	375.0 °C	375.0 °C	0.0 °C	375.0 °C	1.0 °C	T1 typeK
500.0 °C	500.0 °C	500.0 °C	0.0 °C	500.0 °C	1.0 °C	T1 typeK
0.0 °C	0.0 °C	0.0 °C	0.0 °C	0.0 °C	1.0 °C	T2 typeK
125.0 °C	125.0 °C	125.0 °C	0.0 °C	125.0 °C	1.0 °C	T2 typeK
250.0 °C	250.0 °C	250.0 °C	0.0 °C	250.0 °C	1.0 °C	T2 typeK
375.0 °C	375.0 °C	375.0 °C	0.0 °C	375.0 °C	1.0 °C	T2 typeK
500.0 °C	500.0 °C	500.0 °C	0.0 °C	500.0 °C	1.0 °C	T2 typeK

Conditions Environnementales: Température: 20 °C Humidité: 33 %RH

Type d'Étalonnage:

5F09101

Le droit d'auteur du présent certificat appartient à Inst. St-Laurent Inc et doit être reproduit intégralement, à moins d'une autorisation écrite de Inst. St-Laurent Inc.

Instrumentation Saint•Laurent inc.
Accrédité ISO 17025

CLAS NRC-CNRC
CLAS 2010-02

SCC Accredited LAB
LAB Accrédité CCN
N°669

80 rue de la montagne
St-Joseph du lac
(Québec), J0N 1M0
Tél: (450) 473-6169
Fax: (450) 473-5207
Email: inst.st-laurent@videotron.ca

CERTIFICAT D'ÉTALONNAGE

No.Certificat: CE-EM-001 06/03/18

CLIENT	
Compagnie:	Services Polytests Inc
Adresse:	695 B rue Gaudette
	St-Jean-sur-Richelieu, Québec, J3B 7S7

SPÉCIFICATION DE CALIBRATION	
Procédure de service:	4IN9101
Précision requise:	+\- 2.0°C
Fréquence d'étalonnage: (jours)	365

SPÉCIFICATION DE L'INSTRUMENT			
Type d'instrument:	Enregistreur	Type d'entrée:	Temp
Manufacturier:	Fluke	Type de sortie:	Digitale
No. Model:	52-II	Type de mesure:	Température
No. Série:	90630037	Gamme:	Divers
Emplacement:	N.A.	No. Machine:	N.A.

Instrumentation St-Laurent Inc. Certifie que l'instrument ci-haut, rencontre ou excède les spécifications établies par le fabriquant. Le système qualité de l'entreprise est conforme aux exigences de la norme ISO 17025 et les étalons utilisés pour effectuer l'étalonnage est retraçable au CNRC et/ou au NIST. Le degré d'incertitude est basé sur un niveau de confiance=95%, K=2.

DATE D'ÉTALONNAGE / ÉMISSION DU CERTIFICAT	
Date d'Étalonnage:	6 Mars 2018
Date du prochain Étalonnage:	6 Mars 2019
Date d'émission du certificat:	6 Mars 2018

CONFORMITÉ D'ÉTALONNAGE	Avant	Après
Conforme:	X	X
Non Conforme:		

Le Service d'évaluation des laboratoires d'étalonnage (CLAS) du Conseil national de recherches du Canada (CNRC) a évalué et certifié la capacité d'étalonnage du laboratoire et la traçabilité au Système international d'unités (SI) ou à des étalons acceptables selon le CLAS. Le présent certificat d'étalonnage est délivré conformément aux conditions de certification du CLAS et aux conditions d'accréditation du Conseil canadien des normes (CCN). Numéro d'accréditation du CCN: # 669. Le CLAS et le CCN ne garantissent pas l'exactitude des étalonnages individuels effectués par les laboratoires accrédités.

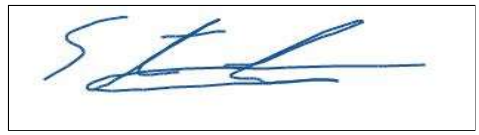

Stéphane - Technicien

5F09101

Le droit d'auteur du présent certificat appartient à Inst. St-Laurent Inc et doit être reproduit intégralement, à moins d'une autorisation écrite de Inst. St-Laurent Inc.

Instrumentation Saint•Laurent inc.
Accrédité ISO 17025

CLAS NRC-CNRC CLAS 2010-02

SCC Accredited LAB
LAB Accrédité CCN N°669

80 rue de la montagne
St-Joseph du lac
(Québec), J0N 1M0
Tél: (450) 473-6169
Fax: (450) 473-5207
Email: inst.st-laurent@videotron.ca

CERTIFICAT D'ÉTALONNAGE

No.Certificat: CE-EM-015 05/03/18

CLIENT	
Compagnie:	Services Polytests Inc
Adresse:	695 B rue Gaudette
	St-Jean-sur-Richelieu, Québec, J3B 7S7

SPÉCIFICATION DE CALIBRATION	
Procédure de service:	4IN9101
Précision requise:	+\- 2°C
Fréquence d'étalonnage: (jours)	365

SPÉCIFICATION DE L'INSTRUMENT			
Type d'instrument:	Enregistreur	Type d'entrée:	Temp
Manufacturier:	Keithley	Type de sortie:	Digitale
No. Model:	7700	Type de mesure:	Température
No. Série:	1213648	Gamme:	Divers
Emplacement:	N/A	No. Machine:	N.A.

SPÉCIFICATION DE L'ÉTALON			
Étalon Utilisé:	Fluke 744	No. du certificat d'étalonnage:	2017004079
No. Série:	7798010	Dernière date d'étalonnage:	5-Jul-17
Certificat fait par:	Alpha Controls	Prochaine date d'étalonnage:	5-Jul-18
Commentaire:			

RÉSULTAT D'ÉTALONNAGE

Entrée Source	Valeur Donnée	Valeur Actuelle	Erreur de Déviation	Valeur après Étalonnage	Incertitude Élargie	Commentaire
-190.0 °C	-190.0 °C	-190.7 °C	-0.7 °C	-190.7 °C	1.0 °C	Input#1TypeK
0.0 °C	0.0 °C	-0.3 °C	-0.3 °C	-0.3 °C	1.0 °C	Input#1TypeK
750.0 °C	750.0 °C	749.7 °C	-0.3 °C	749.7 °C	1.0 °C	Input#1TypeK
100.0 °C	100.0 °C	99.7 °C	-0.3 °C	99.7 °C	1.0 °C	Input#2 TypeK
100.0 °C	100.0 °C	99.7 °C	-0.3 °C	99.7 °C	1.0 °C	Input#3 TypeK
100.0 °C	100.0 °C	99.6 °C	-0.4 °C	99.6 °C	1.0 °C	Input#4 TypeK
100.0 °C	100.0 °C	99.6 °C	-0.4 °C	99.6 °C	1.0 °C	Input#5TypeK
100.0 °C	100.0 °C	99.7 °C	-0.3 °C	99.7 °C	1.0 °C	Input#6TypeK
100.0 °C	100.0 °C	99.7 °C	-0.3 °C	99.7 °C	1.0 °C	Input#7TypeK
100.0 °C	100.0 °C	99.7 °C	-0.3 °C	99.7 °C	1.0 °C	Input#8TypeK
100.0 °C	100.0 °C	99.8 °C	-0.2 °C	99.8 °C	1.0 °C	Input#9TypeK
100.0 °C	100.0 °C	99.7 °C	-0.3 °C	99.7 °C	1.0 °C	Input#10TypeJ
100.0 °C	100.0 °C	99.7 °C	-0.3 °C	99.7 °C	1.0 °C	Input#11TypeJ
100.0 °C	100.0 °C	99.7 °C	-0.3 °C	99.7 °C	1.0 °C	Input#12TypeJ
100.0 °C	100.0 °C	99.7 °C	-0.3 °C	99.7 °C	1.0 °C	Input#13 TypeJ
100.0 °C	100.0 °C	99.7 °C	-0.3 °C	99.7 °C	1.0 °C	Input#14TypeJ
100.0 °C	100.0 °C	99.8 °C	-0.2 °C	99.8 °C	1.0 °C	Input#15 TypeJ
100.0 °C	100.0 °C	99.7 °C	-0.3 °C	99.7 °C	1.0 °C	Input#16TypeJ
100.0 °C	100.0 °C	99.7 °C	-0.3 °C	99.7 °C	1.0 °C	Input#17TypeJ
100.0 °C	100.0 °C	99.8 °C	-0.2 °C	99.8 °C	1.0 °C	Input#18TypeJ
100.0 °C	100.0 °C	99.8 °C	-0.2 °C	99.8 °C	1.0 °C	Input#19TypeJ
100.0 °C	100.0 °C	99.9 °C	-0.1 °C	99.9 °C	1.0 °C	Input#20TypeJ
12.000 mA	12.000 mA	12.005 mA	+0.005 mA	12.005 mA	1.00 mA	Input#21
12.000 mA	12.000 mA	12.005 mA	+0.005 mA	12.005 mA	1.00 mA	Input#22

Conditions Environnementales: Température: 21 °C Humidité: 31 %RH

5F09101

Le droit d'auteur du présent certificat appartient à Inst. St-Laurent Inc et doit être reproduit intégralement, à moins d'une autorisation écrite de Inst. St-Laurent Inc.

Instrumentation Saint•Laurent inc.
Accrédité ISO 17025

CLAS NRC-CNRC
CLAS 2010-02

SCC Accredited LAB
LAB Accrédité CCN
N°669

80 rue de la montagne
St-Joseph du lac
(Québec), J0N 1M0
Tél: (450) 473-6169
Fax: (450) 473-5207
Email: inst.st-laurent@videotron.ca

CERTIFICAT D'ÉTALONNAGE

No.Certificat: CE-EM-015 05/03/18

CLIENT	
Compagnie:	Services Polytests Inc
Adresse:	695 B rue Gaudette
	St-Jean-sur-Richelieu, Québec, J3B 7S7

SPÉCIFICATION DE CALIBRATION	
Procédure de service:	4IN9101
Précision requise:	+\- 2°C
Fréquence d'étalonnage: (jours)	365

SPÉCIFICATION DE L'INSTRUMENT			
Type d'instrument:	Enregistreur	Type d'entrée:	Temp
Manufacturier:	Keithley	Type de sortie:	Digitale
No. Model:	7700	Type de mesure:	Température
No. Série:	1213648	Gamme:	Divers
Emplacement:	N/A	No. Machine:	N.A.

Type d'Étalonnage: Test avec EM-012

Instrumentation St-Laurent Inc. Certifie que l'instrument ci-haut, rencontre ou excède les spécifications établies par le fabriquant. Le système qualité de l'entreprise est conforme aux exigences de la norme ISO 17025 et les étalons utilisés pour effectuer l'étalonnage est retraçâble au CNRC et/ou au NIST. Le degré d'incertitude est basé sur un niveau de confiance=95%, K=2.

DATE D'ÉTALONNAGE / ÉMISSION DU CERTIFICAT	
Date d'Étalonnage:	5 Mars 2018
Date du prochain Étalonnage:	5 Mars 2019
Date d'émission du certificat:	5 Mars 2018

CONFORMITÉ D'ÉTALONNAGE	Avant	Après
Conforme:	X	X
Non Conforme:		

Le Service d'évaluation des laboratoires d'étalonnage (CLAS) du Conseil national de recherches du Canada (CNRC) a évalué et certifié la capacité d'étalonnage du laboratoire et la traçabilité au Système international d'unités (SI) ou à des étalons acceptables selon le CLAS. Le présent certificat d'étalonnage est délivré conformément aux conditions de certification du CLAS et aux conditions d'accréditation du Conseil canadien des normes (CCN). Numéro d'accréditation du CCN: # 669. Le CLAS et le CCN ne garantissent pas l'exactitude des étalonnages individuels effectués par les laboratoires accrédités.

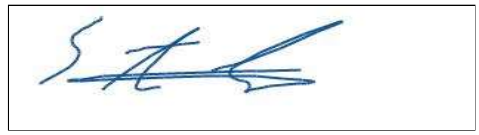

Stéphane - Technicien

5F09101

Le droit d'auteur du présent certificat appartient à Inst. St-Laurent Inc et doit être reproduit intégralement, à moins d'une autorisation écrite de Inst. St-Laurent Inc.

POLYCONTROLS
INTEGRATION • CALIBRATION • INSTRUMENTATION

CLAS 2009-02

Conseil canadien des normes
Laboratoire accrédité
Portée d'accréditation 655

ISO/IEC 17025-2005

CERTIFICAT D'ÉTALONNAGE # 9786

Date d'étalonnage : 2018-11-12
Date d'émission du certificat : 2018-11-12

Services Polytests
695 B Gaudette street
St-Jean-sur-Richelieu, Québec, Canada
J3B 7S7

Étalonnage d'un
Débitmètre volumétrique American Meter Company DTM-200A S/N : 99A274209

CONFORMITÉ AU PROGRAMME DE QUALITÉ

Tous les étalonnages sont effectués conformément au manuel d'assurance qualité de Polycontrols qui est conforme à la norme ISO/IEC 17025 – 2005, à la norme ISO 9001 – 2015 ainsi qu'à tout autre exigences de qualité définies dans la description d'achat des clients.

TRAÇABILITÉ

La traçabilité des étalons de débit au National Institute of Standards and Technology, NIST, est maintenue par les laboratoires de Fluke Corporation de Phoenix, Arizona et est conforme aux normes ISO/IEC 17025, AINSI/NCSL Z540-1-1994, ISO-10012-1, MIL-STD 45662A.

Le Service d'évaluation des laboratoires d'étalonnage (CLAS) du Conseil national de recherches du Canada (CNRC) a évalué et certifié la capacité d'étalonnage du laboratoire et la traçabilité au Système international d'unités (SI) ou à des étalons acceptables selon le CLAS. Le présent certificat d'étalonnage est délivré conformément aux conditions de certification du CLAS et aux conditions d'accréditation du Conseil canadien des normes (CCN). Le CLAS et le CCN ne garantissent pas l'exactitude des étalonnages individuels effectués par les laboratoires accrédités.

APTITUDE EN MATIÈRE DE MESURE ET D'ÉTALONNAGE - CMC

Les références utilisées pour l'étalonnage de débit ont une incertitude de ±0.2% de la lecture pour les mesures entre 5 SCCM à 10 SLPM, ±0.3% de la lecture pour les mesures entre 10 SLPM à 30 SLPM, ±0.2% de la lecture pour les mesures entre 30 SLPM à 3000 SLPM, ±0.3% de la lecture pour les mesures supérieures à 3000 SLPM jusqu'à 6000 SLPM et ±0.5% pour les mesures inférieures à 5 SCCM jusqu'à concurrence de 1 SCCM, équivalent air ou azote. Les incertitudes exprimées sont élargies avec un facteur d'élargissement k = 2, et ce, pour un niveau de confiance d'environ 95 %, dans l'hypothèse d'une distribution normale incluant la résolution de l'instrument. Le rapport d'incertitude des essais (RIE) de cet étalonnage respecte un ratio de 4:1 à moins d'indication contraire.

SOMMAIRE DES CONDITIONS DE L'INSTRUMENT EN TEST

Conditions initiales	En bon état
Travail Effectué	Étalonnage de l'instrument
	Lectures Initiales = Lectures finales, aucun ajustement
Résultats	Lectures finales dans les tolérances
Remarques	Fréquence d'étalonnage aux 12 mois

Métrologiste

Responsable du laboratoire

©2012 Polycontrols • Le présent document ne peut être reproduit, sinon en entier, que par l'approbation écrite des laboratoires d'étalonnage de la compagnie Polycontrols inc. 3650 boul. Matte (Local A-1), Brossard (Québec), Canada, J4Y 2Z2
Tel: (450) 444-3600 Fax: (450) 444-1088 www.polycontrols.com

2018-11-22

POLYCONTROLS
INTEGRATION • CALIBRATION • INSTRUMENTATION

CLAS 2009-02 | Conseil canadien des normes Laboratoire accrédité Portée d'accréditation 655 | ISO/IEC 17025-2005

Certificat d'étalonnage # 9786

Numéro de série:	99A274209	Station de mesure:	3
Date d'étalonnage:	2018-11-12	Procédure:	POS-CAL-005
Identification de l'instrument:	EM-130		

Instrument de mesure de référence utilisé pour l'étalonnage final

Description	Modèle	# Série	Traçabilité	Date dû
DHI molbloc (30 slpm)	3E4-VCR-V-Q	2403	1500237464	2019-04-26
DHI molbloc (100 slpm)	2E2-S	380	1500241926	2019-07-19
DHI molbox1	Molbox1	755	1500237197	2019-04-25
RTD Mist	M22	2208102	2018002234	2019-04-11
Module 44.5 PSI avec Baro 163671	Module 30	160659	2018002180	2019-04-12

Spécifications finales de l'appareil

Gaz	Air
Température d'opération	
Pression à l'entrée	
Pression à la sortie	
Température de référence	
Pression de référence	
Étendue d'échelle	0-200 ACFH
Signaux Entrée/Sortie	-
Alimentation	
Tolérance	±1 %O.R.

Condition d'étalonnage

Gaz	Air
Température ambiante	21.5 °C
Pression ambiante	1026.07 mbar
Orientation	Verticale
Élastomère	Viton
Valve	Viton

Lectures finales

Débit du test ACFH	Instrument en test ft³	Valeurs mesurées Pression PSIA	Température °C	Référence ft³	Référence calculée ft³	Erreur calculée ft³	Tolérance acceptable ft³	TUR
39.5798	6.610	14.8845	21.17	6.674	6.590	0.020	0.066	2.97
70.0656	11.700	14.9044	21.05	11.845	11.677	0.023	0.117	>4
164.1928	27.340	15.0230	20.96	27.959	27.336	0.004	0.273	>4

Bernard Poirier
Métrologiste

Signature

POLYCONTROLS
INTEGRATION • CALIBRATION • INSTRUMENTATION

CLAS 2009-02

Conseil canadien des normes
Laboratoire accrédité
Portée d'accréditation 655

ISO/IEC 17025-2005

Certificat d'étalonnage # 9786

Numéro de série:	99A274209	Station de mesure:	3
Date d'étalonnage:	2018-11-12	Procédure:	POS-CAL-005
Identification de l'instrument:	EM-130		

Résultats finaux

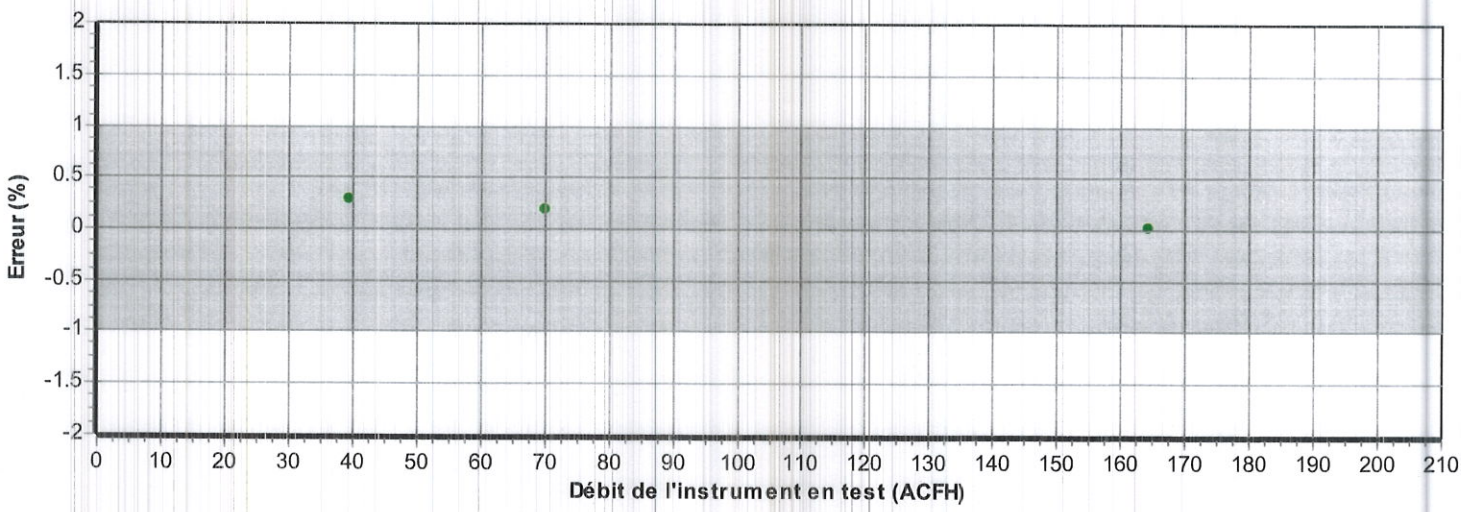

- La mesure (et son incertitude) se situe dans les tolérances
- La mesure (et son incertitude) se situe hors tolérance
- La mesure (et son incertitude) ne rencontre pas la marge de sécurité tel que spécifié dans le document G-8 de l'ILAC

Bernard Poirier
Métrologiste

Signature

Instrumentation Saint•Laurent inc.
Accrédité ISO 17025

CLAS NRC-CNRC
CLAS 2010-02

SCC Accredited LAB
LAB Accrédité CCN
N°669

80 rue de la montagne
St-Joseph du lac
(Québec), J0N 1M0
Tél: (450) 473-6169
Fax: (450) 473-5207
Email: inst.st-laurent@videotron.ca

CERTIFICAT D'ÉTALONNAGE

No.Certificat: CE-EM-136 06/03/18

CLIENT	
Compagnie:	Services Polytests Inc
Adresse:	695 B rue Gaudette
	St-Jean-sur-Richelieu, Québec, J3B 7S7

SPÉCIFICATION DE CALIBRATION	
Procédure de service:	ISL-004
Précision requise:	+\-2°C +\-3%RH
Fréquence d'étalonnage: (jours)	365

SPÉCIFICATION DE L'INSTRUMENT			
Type d'instrument:	Hygromètre	Type d'entrée:	Temp/%RH
Manufacturier:	Fluke	Type de sortie:	Digitale
No. Model:	971	Type de mesure:	Temp/humidité
No. Série:	10610850	Gamme:	5-95%RH -20a60°C
Emplacement:	N.A.	No. Machine:	N.A.

SPÉCIFICATION DE L'ÉTALON			
Étalon Utilisé:	Vaisala Portable 1	No. du certificat d'étalonnage:	2017004428
No. Série:	U4840010/U4920031	Dernière date d'étalonnage:	19-Jul-17
Certificat fait par:	Alpha Controls	Prochaine date d'étalonnage:	19-Jul-18
Commentaire:			

RÉSULTAT D'ÉTALONNAGE

Entrée Source	Valeur Donnée	Valeur Actuelle	Erreur de Déviation	Valeur après Étalonnage	Incertitude Élargie	Commentaire
25.0 °C	25.0 °C	25.2 °C	+0.2 °C	25.2 °C	1.0 °C	
40.0 °C	40.0 °C	40.1 °C	+0.1 °C	40.1 °C	1.0 °C	
33.0 %RH	33.0 %RH	32.5 %RH	-0.5 %RH	32.5 %RH	3.0 %RH	
50.0 %RH	50.0 %RH	49.1 %RH	-0.9 %RH	49.1 %RH	3.0 %RH	
80.0 %RH	80.0 %RH	79.2 %RH	-0.8 %RH	79.2 %RH	3.0 %RH	

Conditions Environnementales: Température: 21 °C Humidité: 29 %RH

Type d'Étalonnage:

Instrumentation St-Laurent Inc. Certifie que l'instrument ci-haut, rencontre ou excède les spécifications établies par le fabriquant. Le système qualité de l'entreprise est conforme aux exigences de la norme ISO 17025 et les étalons utilisés pour effectuer l'étalonnage est retraçable au CNRC et/ou au NIST. Le degré d'incertitude est basé sur un niveau de confiance=95%, K=2.

DATE D'ÉTALONNAGE / ÉMISSION DU CERTIFICAT	
Date d'Étalonnage:	6 Mars 2018
Date du prochain Étalonnage:	6 Mars 2019
Date d'émission du certificat:	6 Mars 2018

CONFORMITÉ D'ÉTALONNAGE	Avant	Après
Conforme:	X	X
Non Conforme:		

Le Service d'évaluation des laboratoires d'étalonnage (CLAS) du Conseil national de recherches du Canada (CNRC) a évalué et certifié la capacité d'étalonnage du laboratoire et la traçabilité au Système international d'unités (SI) ou à des étalons acceptables selon le CLAS. Le présent certificat d'étalonnage est délivré conformément aux conditions de certification du CLAS et aux conditions d'accréditation du Conseil canadien des normes (CCN). Numéro d'accréditation du CCN: # 669. Le CLAS et le CCN ne garantissent pas l'exactitude des étalonnages individuels effectués par les laboratoires accrédités.



Stéphane - Technicien

Le droit d'auteur du présent certificat appartient à Inst. St-Laurent Inc et doit être reproduit intégralement, à moins d'une autorisation écrite de Inst. St-Laurent Inc.

CERTIFICATE OF NIST TRACEABLE CALIBRATION

Calibration Certificate No: 69804

Customer Information

Customer: Services Polytests, Inc.

Address : 695-B Gaudette
St-Jean-sur-richelieu
J3B 7S7

Customer PO #: 100476

Calibration Procedure Information

Procedure ID: GTP AIRVEL Revision #: 6 Revision Date: 1/6/2013

Calibration Standards Information

Graftel ID	Manufacturer	Model #	Description	CAL Due
10086	Furness Controls	FC0332	DP Transmitter	6/6/2019
10100	Graftel	n/a	Temperature	10/29/2019
10171	Furness	FC0332-2W	0 - .4" H2O	11/10/2018
10187	Vaisala	PTB210	Barometric Pressure Gauge	11/22/2018
10157	HOBO	UX100-011	RH/Temp logger	11/10/2018

Sensor Information

Manufacturer: Omega Description: Anemometer Method Used: Pitot Tube

Model #: HHF143 Rated Accuracy: ± See Attachment Accuracy Specified By: Omega

Instrument ID#: EM153 Range: 40 to 7800 fpm Condition: Functional

Serial #: 1015949

Comments: Calibration Date: 08/16/2018 | Note: Limited calibration range = 40 to 5000 fpm
Calibration Due: 08/16/2019

The instrument(s) listed on this certificate have been calibrated against standards traceable to the National Institute of Standards & Technology (NIST) or compared to nationally or internationally recognized consensus standards. The reported calibration uncertainty has a confidence level of 95% (k=2). A calibration uncertainty ratio of 4:1 was maintained unless required uncertainty is supported by analysis. Graftel, LLC. Quality Assurance System complies with applicable requirements of ISO/IEC-17025-2005, ANSI/NCSL Z540-I-1994 and ISO 9001: 2008. All results contained within this certificate relate only to item(s) calibrated. This certificate shall not be reproduced except in full and with the written consent of Graftel, LLC. Acceptance Criteria per Simple Acceptance Rule: Measurement Uncertainty is not applied to the measured value when in/out of tolerance statement is made.

Performed By: _____ Date: 8/16/2018

Philip Davis
Calibration Technician

GRAFTEL 870 Cambridge Drive, Elk Grove Village, IL 60007 847.364.2600
www.graftel.com

ATTACHMENT TO CALIBRATION CERTIFICATE 69804
AS FOUND/AS LEFT DATA

Reading From Standard,	Lower Limit of Meter Reading,	Measured Reading From Meter,	Upper Limit of Meter Reading,	Error,	Measurement Uncertainty,	STATUS
Actual Air Velocity						
fpm	fpm	fpm	fpm	fpm	fpm	
494	488	493	500	-1	2.47	Pass
1238	1225	1236	1251	-2	6.19	Pass
1805	1786	1804	1824	-1	9.03	Pass
2448	2423	2445	2473	-3	12.24	Pass
3063	3031	3064	3095	1	15.32	Pass
3724	3686	3727	3762	3	18.62	Pass
4388	4343	4392	4433	4	21.94	Pass
4911	4861	4914	4961	3	24.56	Pass

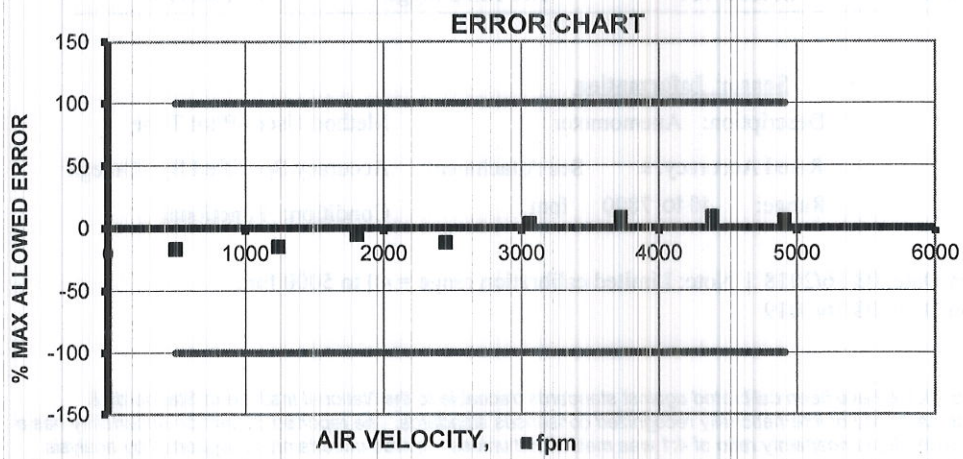

INSTRUMENT SPECIFICATIONS		
Test Fluid	Air	
Lower Range	40	fpm
Upper Range	7800	fpm
Rated Accuracy	1%Rding +1 digit	
LABORATORY AMBIENT CONDITIONS		
Pressure	14.36	psia
Humidity	56.22	% RH
Temperature	74.51	F

Flow - Humidity - Temperature - Pressure - Design - Consulting - Engineering

NIST Traceable Calibration Data Sheet

Graftel, LLC. 870 Cambridge Drive, Elk Grove Village, IL.60007
P. 847-364-2600 F. 847-364-2899

www.graftel.com

2018.08.27

Instrumentation Saint•Laurent inc.
Accrédité ISO 17025

CLAS NRC-CNRC
CLAS 2010-02

SCC Accredited LAB
LAB Accrédité CCN
N°669

80 rue de la montagne
St-Joseph du lac
(Québec), J0N 1M0
Tél: (450) 473-6169
Fax: (450) 473-5207
Email: inst.st-laurent@videotron.ca

CERTIFICAT D'ÉTALONNAGE

No.Certificat: CE-EM-154 05/03/18

CLIENT	
Compagnie:	Services Polytests Inc
Adresse:	695 B rue Gaudette
	St-Jean-sur-Richelieu, Québec, J3B 7S7

SPÉCIFICATION DE CALIBRATION	
Procédure de service:	4IN9101
Précision requise:	+\- 2°C
Fréquence d'étalonnage: (jours)	365

SPÉCIFICATION DE L'INSTRUMENT			
Type d'instrument:	Enregistreur	Type d'entrée:	Temp
Manufacturier:	Keithley	Type de sortie:	Digitale
No. Model:	7700	Type de mesure:	Température
No. Série:	1306774	Gamme:	Divers
Emplacement:	N/A	No. Machine:	N.A.

SPÉCIFICATION DE L'ÉTALON			
Étalon Utilisé:	Fluke 744	No. du certificat d'étalonnage:	2017004079
No. Série:	7798010	Dernière date d'étalonnage:	5-Jul-17
Certificat fait par:	Alpha Controls	Prochaine date d'étalonnage:	5-Jul-18
Commentaire:			

RÉSULTAT D'ÉTALONNAGE

Entrée Source	Valeur Donnée	Valeur Actuelle	Erreur de Déviation	Valeur après Étalonnage	Incertitude Élargie	Commentaire
-17.000 mV	-17.000 mV	-16.985 mV	+0.015 mV	-16.985 mV	0.1 mV	Input#1
0.000 mV	0.000 mV	0.081 mV	+0.081 mV	0.081 mV	0.1 mV	Input#1
20.000 mV	20.000 mV	20.058 mV	+0.058 mV	20.058 mV	0.1 mV	Input#1
30.000 mV	30.000 mV	30.048 mV	+0.048 mV	30.048 mV	0.1 mV	Input#2
Input#3 Non-Conforme						
5.000 V.DC.	5.000 V.DC.	4.999 V.DC.	-0.001 V.DC.	4.999 V.DC.	0.1 V.DC.	Input#4
30.000 mV	30.000 mV	30.026 mV	+0.026 mV	30.026 mV	0.1 mV	Input#5
30.000 mV	30.000 mV	29.992 mV	-0.008 mV	29.992 mV	0.1 mV	Input#6
100.00 Ohms	100.00 Ohms	99.99 Ohms	-0.01 Ohms	99.99 Ohms	1.0 Ohms	Input#7
100.00 Ohms	100.00 Ohms	99.99 Ohms	-0.01 Ohms	99.99 Ohms	1.0 Ohms	Input#8
100.00 Ohms	100.00 Ohms	100.01 Ohms	+0.01 Ohms	100.01 Ohms	1.0 Ohms	Input#9
100.00 Ohms	100.00 Ohms	99.92 Ohms	-0.08 Ohms	99.92 Ohms	1.0 Ohms	Input#10
100.0 °C	100.0 °C	99.6 °C	-0.4 °C	99.6 °C	1.0 °C	Input#11TypeT
100.0 °C	100.0 °C	99.6 °C	-0.4 °C	99.6 °C	1.0 °C	Input#12TypeT
100.0 °C	100.0 °C	99.7 °C	-0.3 °C	99.7 °C	1.0 °C	Input#13 TypeJ
100.0 °C	100.0 °C	99.7 °C	-0.3 °C	99.7 °C	1.0 °C	Input#14TypeJ
100.0 °C	100.0 °C	99.6 °C	-0.4 °C	99.6 °C	1.0 °C	Input#15 TypeJ
100.0 °C	100.0 °C	99.6 °C	-0.4 °C	99.6 °C	1.0 °C	Input#16TypeJ
100.00 Ohms	100.00 Ohms	99.98 Ohms	-0.02 Ohms	99.98 Ohms	1.0 Ohms	Input#17
100.00 Ohms	100.00 Ohms	99.89 Ohms	-0.11 Ohms	99.89 Ohms	1.0 Ohms	Input#18
100.00 Ohms	100.00 Ohms	99.90 Ohms	-0.10 Ohms	99.90 Ohms	1.0 Ohms	Input#19
100.00 Ohms	100.00 Ohms	99.86 Ohms	-0.14 Ohms	99.86 Ohms	1.0 Ohms	Input#20
12.000 mA	12.000 mA	12.003 mA	+0.003 mA	12.003 mA	1.00 mA	Input#21
12.000 mA	12.000 mA	12.005 mA	+0.005 mA	12.005 mA	1.00 mA	Input#22

Conditions Environnementales: Température: 21 °C Humidité: 31 %RH

5F09101

Le droit d'auteur du présent certificat appartient à Inst. St-Laurent Inc et doit être reproduit intégralement, à moins d'une autorisation écrite de Inst. St-Laurent Inc.

Instrumentation Saint•Laurent inc.
Accrédité ISO 17025

CLAS NRC-CNRC
CLAS 2010-02

SCC Accredited LAB
LAB Accrédité CCN
N°669

80 rue de la montagne
St-Joseph du lac
(Québec), J0N 1M0
Tél: (450) 473-6169
Fax: (450) 473-5207
Email: inst.st-laurent@videotron.ca

CERTIFICAT D'ÉTALONNAGE

No.Certificat: CE-EM-154 05/03/18

CLIENT	
Compagnie:	Services Polytests Inc
Adresse:	695 B rue Gaudette
	St-Jean-sur-Richelieu, Québec, J3B 7S7

SPÉCIFICATION DE CALIBRATION	
Procédure de service:	4IN9101
Précision requise:	+\- 2°C
Fréquence d'étalonnage: (jours)	365

SPÉCIFICATION DE L'INSTRUMENT			
Type d'instrument:	Enregistreur	Type d'entrée:	Temp
Manufacturier:	Keithley	Type de sortie:	Digitale
No. Model:	7700	Type de mesure:	Température
No. Série:	1306774	Gamme:	Divers
Emplacement:	N/A	No. Machine:	N.A.

Type d'Étalonnage: Test avec EM-012

Instrumentation St-Laurent Inc. Certifie que l'instrument ci-haut, rencontre ou excède les spécifications établies par le fabriquant. Le système qualité de l'entreprise est conforme aux exigences de la norme ISO 17025 et les étalons utilisés pour effectuer l'étalonnage est retraçâble au CNRC et/ou au NIST. Le degré d'incertitude est basé sur un niveau de confiance=95%, K=2.

DATE D'ÉTALONNAGE / ÉMISSION DU CERTIFICAT	
Date d'Étalonnage:	5 Mars 2018
Date du prochain Étalonnage:	5 Mars 2019
Date d'émission du certificat:	5 Mars 2018

CONFORMITÉ D'ÉTALONNAGE	Avant	Après
Conforme:	X	X
Non Conforme:		

Le Service d'évaluation des laboratoires d'étalonnage (CLAS) du Conseil national de recherches du Canada (CNRC) a évalué et certifié la capacité d'étalonnage du laboratoire et la traçabilité au Système international d'unités (SI) ou à des étalons acceptables selon le CLAS. Le présent certificat d'étalonnage est délivré conformément aux conditions de certification du CLAS et aux conditions d'accréditation du Conseil canadien des normes (CCN). Numéro d'accréditation du CCN: # 669. Le CLAS et le CCN ne garantissent pas l'exactitude des étalonnages individuels effectués par les laboratoires accrédités.



Stéphane - Technicien

5F09101

Le droit d'auteur du présent certificat appartient à Inst. St-Laurent Inc et doit être reproduit intégralement, à moins d'une autorisation écrite de Inst. St-Laurent Inc.

4407 rue Charleroi, Montréal-Nord (Québec) H1H 1T6 Canada
TEL.: (514) 329-3242 / 1 888 774-6665
FAX : (514) 329-3750
info.canada@trescal.com

Certificat d'Étalonnage / Certificate of Calibration

CLIENT :
SERVICES POLYTESTS INC.
695-B GAUDETTE
ST-JEAN-SUR-RICHELIEU, QUEBEC

Description: CHRONOMÈTRE / STOPWATCH TIMER
Fabricant/ Manufacturer: EXTECH
Modèle/ Model : 365510
No série / Serial no : 131636
 # Inventaire / Asset # : **EM-175**

CERTIFICAT No / Certificate No: **254068**

PROCÉDURE / Procedure :
TRESCAL - EXTECH_365510

Date étalonnage/ Calibration Performed : 2018-12-20

Echéance/ Due Date : 2019-12-20

Type de résultat / *Results type* : **As-Found = As-Left**

Résultats d'essais / *Test results* : Conforme / In Tolerance

Conditions de mesure / Measurement conditions

TEMPÉRATURE / Temp. : **22°C**

HUMIDITÉ / Humidity : **23% RH**

Usage restreint/ *Restricted use* : ☐

Réparation effectuée / *Repair performed* : ☐

Ajustement effectué / *Adjustment performed* : ☐

ÉTALONS UTILISÉS/ Standards Used:

Identification	Manuf.	Model	Description	Ser. #	Etalonné/ Cal.	Echéance/ Due
PR0313	H-P	53132A	UNIVERSAL COUNTER	3546A03142	2018-07-03	2019-07-03
PR0392	AGILENT	33250A	FUNCTION/ARBITRARY WAVEFORM GENERATOR	MY40008014	2017-06-19	2019-06-19

Les spécifications mentionnées comme limites de tolérances d'essai sont celles établies par le manufacturier, sauf indication contraire.
Test tolerance limits are based on manufacturers specifications unless stated otherwise.

NOTES :

2019-01-07

Technicien :
Technician

Y. MEFTAH

Le système qualité de la société est conforme aux exigences de la norme **ISO 17025** et les étalons utilisés pour le processus d'étalonnage sont retraçables au SI par l'entremise du CNRC et/ou du NIST.
*Our quality system complies with the requirements of **ISO 17025** and the standards used for the calibration are traceable to SI through NRC and/or NIST.*

LE DROIT D'AUTEUR DE CE CERTIFICAT APPARTIENT À TRESCAL / PRIMO INSTRUMENT INC.CE CERTIFICAT NE PEUT ÊTRE REPRODUIT AUTREMENT QU'EN ENTIER ET AVEC LE CONSENTEMENT PRÉALABLE ÉCRIT DU GROUPE TRESCAL.
TRESCAL / *PRIMO INSTRUMENT INC. OWN COPYRIGHT OF THIS CERTIFICATE.THE CERTIFICATE MAY NOT BE REPRODUCED OTHER THAN IN FULL EXCEPT WITH THE PRIOR WRITTEN CONSENT OF THE TRESCAL GROUP.*

ACCREDITATION 17025 ISO/IEC

Réf : [illegible]

CALIBRATION | SOLUTIONS | TO | IMPROVE | YOUR | PERFORMANCE
LA | MÉTROLOGIE | AU | SERVICE | DE | VOTRE | PERFORMANCE
www.trescal.com

Trescal

Certificat d'Étalonnage
Certificate of Calibration

	254068
CLIENT / Customer :	SERVICES POLYTESTS INC.
DESCRIPTION / Description :	CHRONOMÈTRE / STOPWATCH TIMER
MANUFACTURIER / Manufacturer :	EXTECH
MODÈLE / Model :	365510

DESCRIPTION Description	LIMITES Limits	LECTURES Readings	LIMITES Limits
	Min	Comptes / Counts Chronomètre/timer 162060	Max

Temps écoulé, chronomètre sous test / Elapsed time on test stopwatch

Minutes	Seconds	1/100 sec
27	0	60

Total au compteur / Reference timer: 162058.0 comptes/counts

(Δt) Deviation (1/100sec): 2.00

Deviation Par jour/ Per day (%):	0.0012 %	* Secondes	Deviation 24hrs	* Secondes
Deviation Par jour/ Per day (sec):	**1.07 sec**	-3.00	**1.07**	3.00

* Tolérances basées sur une déviation maximale de 3 sec/jour
* Tolerances based on a 3 sec/day maximum deviation

Incertitude/ Uncertainty: ±37 ms

Lorsque fournies dans le rapport, les incertitudes de mesure sont des incertitudes élargies représentant un niveau de confiance d'approximativement 95% , obtenu en multipliant l'incertitude-type composée par un facteur de couverture de k=2.
When supplied in the report, the measurement uncertainties are expanded uncertainties representing a confidence level of approximately 95% , obtain by multiplying the combined standard uncertainty by a coverage factor of k=2.

ACCREDITATION 17025 ISO/IEC

POLYCONTROLS
INTEGRATION • CALIBRATION • INSTRUMENTATION

CLAS NRC-CNRC
CLAS 2009-02

Conseil canadien des normes
Laboratoire accrédité
Portée d'accréditation 655

ISO/IEC 17025-2005 CERTIFICATION

CERTIFICAT D'ÉTALONNAGE # 9799

Date d'étalonnage : 2018-11-14
Date d'émission du certificat : 2018-11-14

Services Polytests
695 B Gaudette street
St-Jean-sur-Richelieu, Québec, Canada
J3B 7S7

Étalonnage d'un
Shinigawa DCDa-2c S/N : 23544

CONFORMITÉ AU PROGRAMME DE QUALITÉ

Tous les étalonnages sont effectués conformément au manuel d'assurance qualité de Polycontrols qui est conforme à la norme ISO/IEC 17025 – 2005, à la norme ISO 9001 – 2015 ainsi qu'à tout autre exigences de qualité définies dans la description d'achat des clients.

TRAÇABILITÉ

La traçabilité des étalons de débit au National Institute of Standards and Technology, NIST, est maintenue par les laboratoires de Fluke Corporation de Phoenix, Arizona et est conforme aux normes ISO/IEC 17025, AINSI/NCSL Z540-1-1994, ISO-10012-1, MIL-STD 45662A.

Le Service d'évaluation des laboratoires d'étalonnage (CLAS) du Conseil national de recherches du Canada (CNRC) a évalué et certifié la capacité d'étalonnage du laboratoire et la traçabilité au Système international d'unités (SI) ou à des étalons acceptables selon le CLAS. Le présent certificat d'étalonnage est délivré conformément aux conditions de certification du CLAS et aux conditions d'accréditation du Conseil canadien des normes (CCN). Le CLAS et le CCN ne garantissent pas l'exactitude des étalonnages individuels effectués par les laboratoires accrédités.

APTITUDE EN MATIÈRE DE MESURE ET D'ÉTALONNAGE - CMC

Les références utilisées pour l'étalonnage de débit ont une incertitude de ±0.2% de la lecture pour les mesures entre 5 SCCM à 10 SLPM, ±0.3% de la lecture pour les mesures entre 10 SLPM à 30 SLPM, ±0.2% de la lecture pour les mesures entre 30 SLPM à 3000 SLPM, ±0.3% de la lecture pour les mesures supérieures à 3000 SLPM jusqu'à 6000 SLPM et ±0.5% pour les mesures inférieures à 5 SCCM jusqu'à concurrence de 1 SCCM, équivalent air ou azote. Les incertitudes exprimées sont élargies avec un facteur d'élargissement k = 2, et ce, pour un niveau de confiance d'environ 95 %, dans l'hypothèse d'une distribution normale incluant la résolution de l'instrument. Le rapport d'incertitude des essais (RIE) de cet étalonnage respecte un ratio de 4:1 à moins d'indication contraire.

SOMMAIRE DES CONDITIONS DE L'INSTRUMENT EN TEST

Conditions initiales	En bon état
Travail Effectué	Étalonnage de l'instrument
Résultats	Lectures initiales hors tolérance
	Lectures finales dans les tolérances
Remarques	Valeur de l'instrument corrigée = Lecture de l'indicateur de l'instrument * 0.98 K facteur
	Fréquence d'étalonnage aux 12 mois

Métrologiste

Responsable du laboratoire

©2012 Polycontrols • Le présent document ne peut être reproduit, sinon en entier, que par l'approbation écrite des laboratoires d'étalonnage de la compagnie Polycontrols inc. 3650 boul. Matte (Local A-1), Brossard (Québec), Canada, J4Y 2Z2
Tel: (450) 444-3600 Fax: (450) 444-1088 www.polycontrols.com

2018. 11. 22

POLYCONTROLS
INTEGRATION • CALIBRATION • INSTRUMENTATION

CLAS 2009-02

Conseil canadien des normes
Laboratoire accrédité
Portée d'accréditation 655

ISO/IEC 17025-2005

Certificat d'étalonnage # 9799

Numéro de série:	23544	Station de mesure:	4
Date d'étalonnage:	2018-11-14	Procédure:	POS-CAL-005
Identification de l'instrument:	EM-178		

Instrument de mesure de référence utilisé pour l'étalonnage initial

Description	Modèle	# Série	Traçabilité	Date dû
DHI molbloc (30 slpm)	3E4-VCR-V-Q	2359	1500231794	2019-01-19
DHI molbox1+	Molbox1+	2089	1500241952	2019-07-24
RTD Mist	Mist	L00295	2017007605	2018-12-07
Module 44.5 PSI avec Baro 163671	Module 30	160659	2018002180	2019-04-12

Spécifications initiales de l'appareil

Gaz	Air
Température d'opération	
Pression à l'entrée	
Pression à la sortie	
Température de référence	
Pression de référence	
Étendue d'échelle	10-2000 ALH
Signaux Entrée/Sortie	-
Alimentation	
Tolérance	±2 %O.R.

Condition d'étalonnage

Gaz	Air
Température ambiante	21 °C
Pression ambiante	1009.77 mbar
Orientation	Horizontale
Élastomère	Viton
Valve	

Lectures initiales

Débit du test ALH	Instrument en test L	Valeurs mesurées Pression PSIA	Température °C	Référence L	Référence calculée L	Erreur calculée L	Tolérance acceptable L	TUR
364.6385	61.8500	14.6522	21.55	60.4150	60.6869	1.1631	1.2137	>4
612.3148	104.0800	14.6557	21.47	101.7210	102.1249	1.9551	2.0425	>4
1628.8459	276.5500	14.6757	21.45	269.8463	270.5303	6.0197	5.4106	>4

Carl Tessier Dansereau
Métrologiste

Carl Tessier-Dansereau
Signature

POLYCONTROLS
INTEGRATION • CALIBRATION • INSTRUMENTATION

CLAS 2009-02

Conseil canadien des normes
Laboratoire accrédité
Portée d'accréditation 655

ISO/IEC 17025-2005

Certificat d'étalonnage # 9799

Numéro de série:	23544	Station de mesure:	4
Date d'étalonnage:	2018-11-14	Procédure:	POS-CAL-005
Identification de l'instrument:	EM-178		

Résultats initiaux

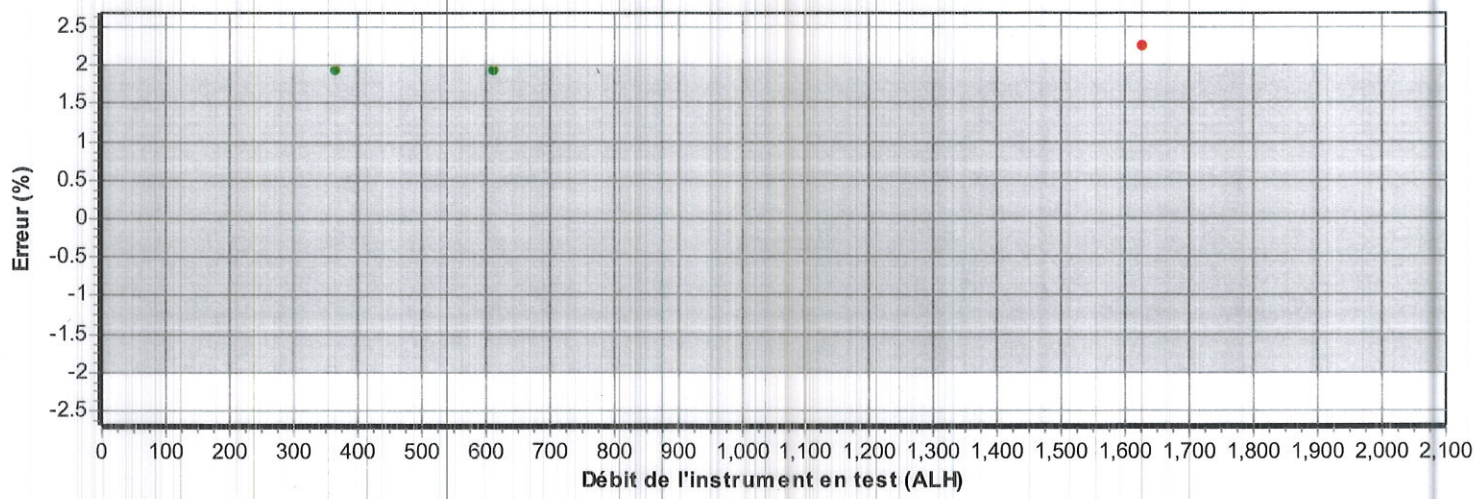

- La mesure (et son incertitude) se situe dans les tolérances
- La mesure (et son incertitude) se situe hors tolérance
- La mesure (et son incertitude) ne rencontre pas la marge de sécurité tel que spécifié dans le document G-8 de l'ILAC

Carl Tessier Dansereau
Métrologiste

Carl Tessier-Dansereau
Signature

POLYCONTROLS
INTEGRATION • CALIBRATION • INSTRUMENTATION

CLAS 2009-02 | Conseil canadien des normes Laboratoire accrédité Portée d'accréditation 655 | ISO/IEC 17025-2005 CERTIFICATION

Certificat d'étalonnage # 9799

Numéro de série:	23544	Station de mesure:	4
Date d'étalonnage:	2018-11-14	Procédure:	POS-CAL-005
Identification de l'instrument:	EM-178		

Instrument de mesure de référence utilisé pour l'étalonnage final

Description	Modèle	# Série	Traçabilité	Date dû
DHI molbloc (30 slpm)	3E4-VCR-V-Q	2359	1500231794	2019-01-19
DHI molbox1+	Molbox1+	2089	1500241952	2019-07-24
RTD Mist	Mist	L00295	2017007605	2018-12-07
Module 44.5 PSI avec Baro 163671	Module 30	160659	2018002180	2019-04-12

Spécifications finales de l'appareil

Gaz	Air
Température d'opération	
Pression à l'entrée	
Pression à la sortie	
Température de référence	
Pression de référence	
Étendue d'échelle	10-2000 ALH
Signaux Entrée/Sortie	-
Alimentation	
Tolérance	±2 %O.R.

Condition d'étalonnage

Gaz	Air
Température ambiante	21.5 °C
Pression ambiante	1025.86 mbar
Orientation	Horizontale
Élastomère	Viton
Valve	

Lectures finales

Débit du test ALH	Instrument en test L	Valeurs mesurées Pression PSIA	Température °C	Référence L	Référence calculée L	Erreur calculée L	Tolérance acceptable L	TUR
352.3959	58.5060	14.8906	21.27	59.3386	58.5953	-0.0893	1.1719	>4
614.6929	102.2940	14.9046	21.20	103.7453	102.3248	-0.0308	2.0465	>4
1597.3393	265.5408	14.9230	21.23	270.0182	266.0123	-0.4715	5.3202	>4

Fc. : 1.0100 7684

Carl Tessier Dansereau
Métrologiste

Carl Tessier Dansereau
Signature

POLYCONTROLS
INTEGRATION • CALIBRATION • INSTRUMENTATION

CLAS 2009-02

Conseil canadien des normes
Laboratoire accrédité
Portée d'accréditation 655

ISO/IEC 17025-2005 CERTIFICATION

Certificat d'étalonnage # 9799

Numéro de série:	23544	Station de mesure:	4
Date d'étalonnage:	2018-11-14	Procédure:	POS-CAL-005
Identification de l'instrument:	EM-178		

Résultats finaux

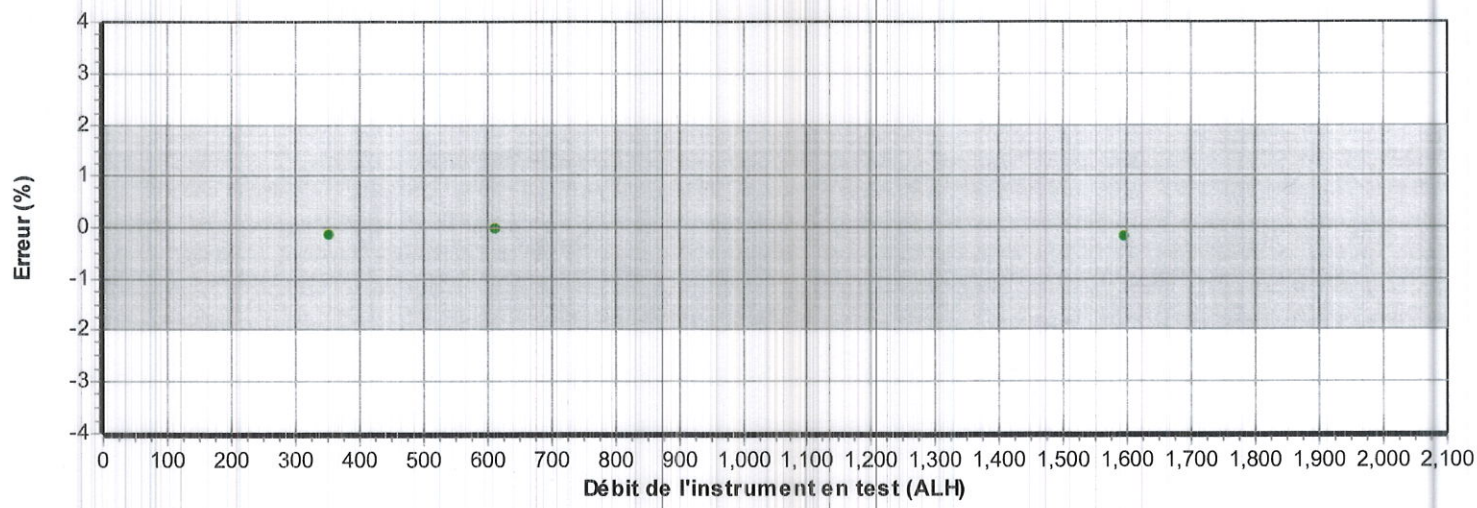

- La mesure (et son incertitude) se situe dans les tolérances
- La mesure (et son incertitude) se situe hors tolérance
- La mesure (et son incertitude) ne rencontre pas la marge de sécurité tel que spécifié dans le document G-8 de l'ILAC

Carl Tessier Dansereau
Métrologiste

Carl Tessier Dansereau
Signature

POLYCONTROLS
INTEGRATION • CALIBRATION • INSTRUMENTATION

CLAS 2009-02

Conseil canadien des normes
Laboratoire accrédité
Portée d'accréditation 655

ISO/IEC 17025-2005 CERTIFICATION

CERTIFICAT D'ÉTALONNAGE # 9801

Date d'étalonnage : 2018-11-14
Date d'émission du certificat : 2018-11-14

Services Polytests
695 B Gaudette street
St-Jean-sur-Richelieu, Québec, Canada
J3B 7S7

Étalonnage d'un
Shinigawa DCDa-2c S/N : 23543

CONFORMITÉ AU PROGRAMME DE QUALITÉ

Tous les étalonnages sont effectués conformément au manuel d'assurance qualité de Polycontrols qui est conforme à la norme ISO/IEC 17025 – 2005, à la norme ISO 9001 – 2015 ainsi qu'à tout autre exigences de qualité définies dans la description d'achat des clients.

TRAÇABILITÉ

La traçabilité des étalons de débit au National Institute of Standards and Technology, NIST, est maintenue par les laboratoires de Fluke Corporation de Phoenix, Arizona et est conforme aux normes ISO/IEC 17025, AINSI/NCSL Z540-1-1994, ISO-10012-1, MIL-STD 45662A.

Le Service d'évaluation des laboratoires d'étalonnage (CLAS) du Conseil national de recherches du Canada (CNRC) a évalué et certifié la capacité d'étalonnage du laboratoire et la traçabilité au Système international d'unités (SI) ou à des étalons acceptables selon le CLAS. Le présent certificat d'étalonnage est délivré conformément aux conditions de certification du CLAS et aux conditions d'accréditation du Conseil canadien des normes (CCN). Le CLAS et le CCN ne garantissent pas l'exactitude des étalonnages individuels effectués par les laboratoires accrédités.

APTITUDE EN MATIÈRE DE MESURE ET D'ÉTALONNAGE - CMC

Les références utilisées pour l'étalonnage de débit ont une incertitude de ±0.2% de la lecture pour les mesures entre 5 SCCM à 10 SLPM, ±0.3% de la lecture pour les mesures entre 10 SLPM à 30 SLPM, ±0.2% de la lecture pour les mesures entre 30 SLPM à 3000 SLPM, ±0.3% de la lecture pour les mesures supérieures à 3000 SLPM jusqu'à 6000 SLPM et ±0.5% pour les mesures inférieures à 5 SCCM jusqu'à concurrence de 1 SCCM, équivalent air ou azote. Les incertitudes exprimées sont élargies avec un facteur d'élargissement k = 2, et ce, pour un niveau de confiance d'environ 95 %, dans l'hypothèse d'une distribution normale incluant la résolution de l'instrument. Le rapport d'incertitude des essais (RIE) de cet étalonnage respecte un ratio de 4:1 à moins d'indication contraire.

SOMMAIRE DES CONDITIONS DE L'INSTRUMENT EN TEST

Conditions initiales	En bon état
Travail Effectué	Lectures Initiales = Lectures finales, aucun ajustement Étalonnage de l'instrument
Résultats	Lectures initiales dans les tolérances
Remarques	Fréquence d'étalonnage aux 12 mois

Carl Tessier-Dansereau
Métrologiste

Responsable du laboratoire

©2012 Polycontrols • Le présent document ne peut être reproduit, sinon en entier, que par l'approbation écrite des laboratoires d'étalonnage de la compagnie Polycontrols inc. 3650 boul. Matte (Local A-1), Brossard (Québec), Canada, J4Y 2Z2
Tel: (450) 444-3600 Fax: (450) 444-1088 www.polycontrols.com

2018-11-22

POLYCONTROLS
INTEGRATION • CALIBRATION • INSTRUMENTATION

CLAS ARC·CRC CLAS 2009-02

Conseil canadien des normes
Laboratoire accrédité
Portée d'accréditation 655

ISO/IEC 17025-2005 CERTIFICATION

Certificat d'étalonnage # 9801

Numéro de série:	23543	Station de mesure:	4
Date d'étalonnage:	2018-11-14	Procédure:	POS-CAL-005
Identification de l'instrument:	EM-179		

Instrument de mesure de référence utilisé pour l'étalonnage final

Description	Modèle	# Série	Traçabilité	Date dû
DHI molbloc (30 slpm)	3E4-VCR-V-Q	2359	1500231794	2019-01-19
DHI molbox1+	Molbox1+	2089	1500241952	2019-07-24
RTD Mist	Mist	L00295	2017007605	2018-12-07
Module 44.5 PSI avec Baro 163671	Module 30	160659	2018002180	2019-04-12

Spécifications finales de l'appareil

Gaz	Air
Température d'opération	
Pression à l'entrée	
Pression à la sortie	
Température de référence	
Pression de référence	
Étendue d'échelle	10-2000 ALH
Signaux Entrée/Sortie	-
Alimentation	
Tolérance	±2 %O.R.

Condition d'étalonnage

Gaz	Air
Température ambiante	21.5 °C
Pression ambiante	1027.25 mbar
Orientation	Horizontale
Élastomère	Viton
Valve	

Lectures finales

Débit du test ALH	Instrument en test L	Valeurs mesurées Pression PSIA	Température °C	Référence L	Référence calculée L	Erreur calculée L	Tolérance acceptable L	TUR
350.3144	59.1000	14.9078	21.31	59.1513	58.3496	0.7504	1.1670	>4
598.7895	101.1200	14.9160	21.26	101.1058	99.6653	1.4547	1.9933	>4
1605.3452	269.5100	14.9364	21.25	271.3957	267.1497	2.3603	5.3430	>4

Fe : 0,98730288

Carl Tessier Dansereau
Métrologiste

Carl Tessier-Dansereau
Signature

POLYCONTROLS
INTEGRATION • CALIBRATION • INSTRUMENTATION

CLAS ARC-CNRC CLAS 2009-02

Conseil canadien des normes
Laboratoire accrédité
Portée d'accréditation 655

ISO/IEC 17025-2005 CERTIFICATION

Certificat d'étalonnage # 9801

Numéro de série:	23543	Station de mesure:	4
Date d'étalonnage:	2018-11-14	Procédure:	POS-CAL-005
Identification de l'instrument:	EM-179		

Résultats finaux

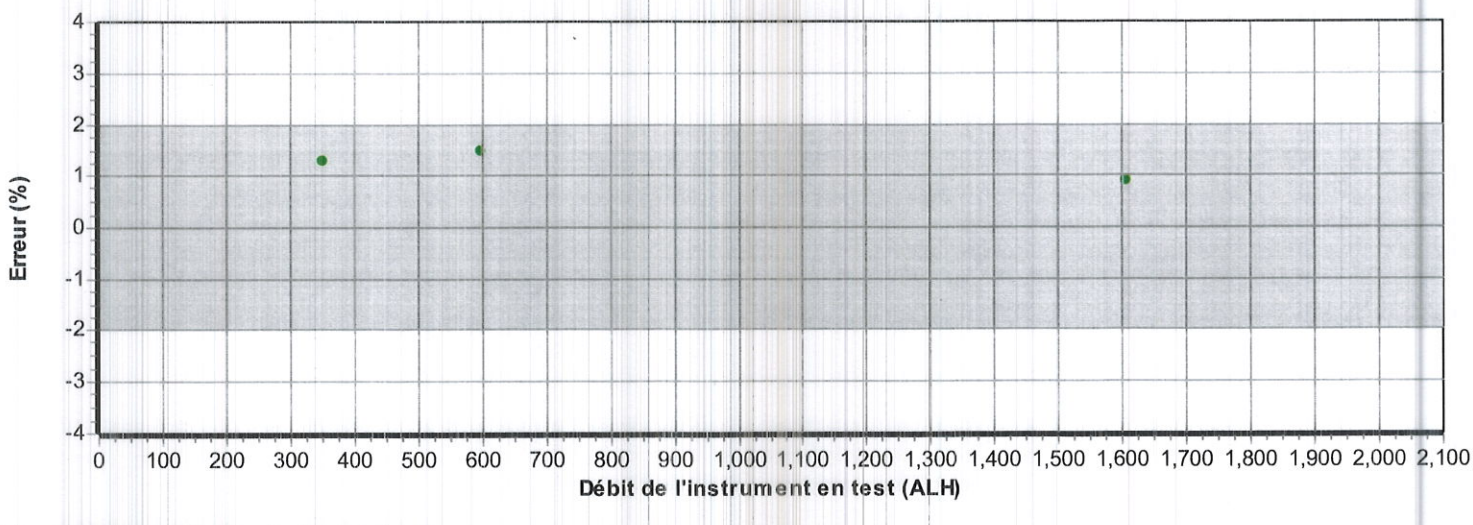

- La mesure (et son incertitude) se situe dans les tolérances
- La mesure (et son incertitude) se situe hors tolérance
- La mesure (et son incertitude) ne rencontre pas la marge de sécurité tel que spécifié dans le document G-8 de l'ILAC

Carl Tessier Dansereau
Métrologiste

Carl Tessier-Dansereau
Signature

EM-183

Airgas

Airgas USA, LLC
325 McCausland Court
Cheshire, CT 06410
(203) 250-6820
(203) 272-1584 (FAX)

CERTIFICATE OF ANALYSIS

Grade of Product: CERTIFIED STANDARD-SPEC

Part Number:	X04NI79C15A2VF3	Reference Number:	37-400238139-1
Cylinder Number:	SG9140147	Cylinder Volume:	151.0 CF
Laboratory:	ANE - Cheshire (SAP) - CT	Cylinder Pressure:	2015 PSIG
Analysis Date:	Aug 16, 2013	Valve Outlet:	590
Lot Number:	37-400238139-1		

Product composition verified by direct comparison to calibration standards traceable to N.I.S.T. weights and/or N.I.S.T. Gas Mixture reference materials.

ANALYTICAL RESULTS

Component	Requested Concentration	Actual Concentration (Mole %)	Analytical Uncertainty
CARBON MONOXIDE	1.000 %	1.031 %	+/- 2%
CARBON DIOXIDE	10.00 %	9.968 %	+/- 2%
OXYGEN	10.00 %	9.995 %	+/- 2%
NITROGEN	Balance		

Notes:

Approved for Release

Airgas

Airgas USA, LLC
325 McCausland Court
Cheshire, CT 06410
(203) 250-6820
(203) 272-1584 (FAX)

CERTIFICATE OF ANALYSIS

Grade of Product: CERTIFIED STANDARD-SPEC

Part Number:	X04NI77C15A0004	Reference Number:	37-400429255-1
Cylinder Number:	CC46789	Cylinder Volume:	144.0 CF
Laboratory:	ANE - Cheshire (SAP) - CT	Cylinder Pressure:	1862 PSIG
Analysis Date:	Sep 29, 2014	Valve Outlet:	350
Lot Number:	37-400429255-1		

Product composition verified by direct comparison to calibration standards traceable to N.I.S.T. weights and/or N.I.S.T. Gas Mixture reference materials.

ANALYTICAL RESULTS

Component	Requested Concentration	Actual Concentration (Mole %)	Analytical Uncertainty
OXYGEN	2.000 %	1.989 %	+/- 2%
CARBON MONOXIDE	3.000 %	2.971 %	+/- 2%
CARBON DIOXIDE	18.00 %	17.87 %	+/- 2%
NITROGEN	Balance		

Approved for Release

Instrumentation Saint•Laurent inc.

80 rue de la montagne
St-Joseph du lac
(Québec), J0N 1M0
Tél: (450) 473-6169
Fax: (450) 473-5207
Email: inst.st-laurent@videotron.ca

CERTIFICAT D'ÉTALONNAGE

No.Certificat: CE-EM-224 06/03/18

CLIENT	
Compagnie:	Services Polytests Inc
Adresse:	695 B rue Gaudette
	St-Jean-sur-Richelieu, Québec, J3B 7S7

SPÉCIFICATION DE CALIBRATION	
Procédure de service:	ISL-022
Précision requise:	+/- 1/32"
Fréquence d'étalonnage: (jours)	365

SPÉCIFICATION DE L'INSTRUMENT			
Type d'instrument:	Ruban à mesurer	Type d'entrée:	Mesure
Manufacturier:	Stanley	Type de sortie:	N/A
No. Model:	Leverlock 12'	Type de mesure:	Inch
No. Série:	N/A	Gamme:	0 à 12'
Emplacement:	Portable	No. Machine:	N/A

SPÉCIFICATION DE L'ÉTALON			
Étalon Utilisé:	Ruban à mesurer	No. du certificat d'étalonnage:	1
No. Série:	1	Dernière date d'étalonnage:	1-Sep-17
Certificat fait par:	Marco Miron	Prochaine date d'étalonnage:	1-Sep-19
Commentaire: sert à titre indicatif seulement			

RÉSULTAT D'ÉTALONNAGE

Entrée Source	Valeur Donnée	Valeur Actuelle	Erreur de Déviation	Valeur après Étalonnage		Commentaire
1.00 "	1.00 "	1.00 "	0.00 "	1.00 "		
36.00 "	36.00 "	36.00 "	0.00 "	36.00 "		
72.00 "	72.00 "	72.00 "	0.00 "	72.00 "		
108.00 "	108.00 "	108.00 "	0.00 "	108.00 "		
132.00 "	132.00 "	132.00 "	0.00 "	132.00 "		

Conditions Environnementales: Température: 21 °C Humidité: 28 %RH

Commentaire:

Instrumentation St-Laurent Inc. Certifie que l'instrument ci-haut, rencontre ou excède les spécifications établies par le fabriquant. Les étalons utilisés pour effectuer l'étalonnage est retraçable au CNRC et/ou au NIST.

DATE D'ÉTALONNAGE / ÉMISSION DU CERTIFICAT	
Date d'Étalonnage:	6 Mars 2018
Date du prochain Étalonnage:	6 Mars 2019
Date d'émission du certificat:	6 Mars 2018

CONFORMITÉ D'ÉTALONNAGE		
	Avant	Après
Conforme:	X	
Non Conforme:	X	



Stéphane - Technicien

Le droit d'auteur du présent certificat appartient à Inst. St-Laurent Inc et doit être reproduit intégralement, à moins d'une autorisation écrite de Inst. St-Laurent Inc.

APPENDIX 4: Unit pre burn

Time minutes	Flue temp °F	Room temp °F	Tunnel dry bulb °F	scale lbs	Right °F	Back °F	bottom °F	Top °F	Left °F
1	108,91	70,21	77,52	5,77	69,90	69,27	69,15	74,51	69,81
2	208,78	70,15	80,77	5,67	70,62	69,62	69,09	90,18	71,21
3	322,50	70,19	91,85	5,52	72,60	71,84	69,02	122,89	76,03
4	362,08	70,28	98,64	5,38	77,10	77,23	69,03	157,33	85,72
5	396,87	70,14	104,89	5,28	82,37	84,29	69,00	192,06	96,10
6	442,32	70,15	113,15	5,07	88,55	92,74	69,14	231,75	107,77
7	453,11	70,37	117,75	4,87	95,14	99,83	69,29	270,84	118,74
8	470,31	70,29	123,01	4,68	102,29	107,67	69,54	312,25	132,09
9	488,54	70,48	128,41	4,47	110,26	117,09	69,91	345,66	145,77
10	504,63	70,67	133,25	4,27	119,63	126,34	70,45	377,86	161,91
11	505,35	70,48	134,64	4,17	130,78	134,61	71,22	403,36	178,18
12	520,15	70,80	138,20	3,88	141,85	142,21	72,24	427,95	194,76
13	543,00	70,73	142,93	3,77	153,61	149,51	73,58	452,74	211,94
14	548,82	71,02	144,82	3,47	166,22	159,65	75,30	472,62	228,65
15	547,71	71,19	146,31	3,38	179,13	169,48	77,46	488,66	245,72
16	552,43	71,01	148,43	3,17	191,32	178,75	80,06	502,90	262,16
17	561,37	70,80	149,90	2,97	203,67	187,34	82,99	515,91	277,54
18	566,36	70,98	150,93	2,77	215,99	196,50	86,69	527,05	291,21
19	574,43	71,17	152,76	2,57	227,45	205,39	90,79	536,98	305,02
20	589,06	71,01	155,36	2,37	239,54	214,38	95,40	548,25	319,37
21	610,85	71,53	159,26	2,17	251,00	223,81	100,36	565,43	335,50
22	618,00	70,87	160,98	1,98	262,60	233,69	106,00	581,32	350,04
23	606,99	70,92	160,65	1,77	274,15	243,81	111,89	595,87	363,96
24	565,64	71,58	209,06	11,44	286,29	254,10	118,18	592,79	376,56
25	478,59	71,47	173,01	16,38	296,43	262,54	125,01	568,24	380,22
26	445,40	71,62	149,74	16,28	303,92	270,67	131,08	544,73	382,22
27	424,83	71,67	139,67	16,18	309,02	277,87	136,87	521,40	382,76
28	413,98	71,52	134,32	16,18	312,24	283,80	142,02	499,06	380,82
29	400,33	71,78	129,78	16,08	313,57	287,56	146,88	479,82	378,09
30	399,41	71,81	127,90	15,98	313,49	289,82	151,46	462,45	374,17
31	399,16	71,84	126,24	15,97	312,51	290,77	156,47	447,15	370,02
32	389,11	71,55	124,10	15,82	310,92	290,58	160,81	433,58	365,62
33	377,41	71,09	121,69	15,78	308,93	289,68	165,05	421,19	361,08
34	312,56	71,58	137,04	16,88	306,69	287,88	168,88	403,99	356,69
35	344,63	71,39	172,76	15,68	303,93	285,63	172,10	383,14	352,16
36	466,49	71,41	202,70	15,38	300,38	283,09	174,66	377,50	349,93
37	458,48	71,32	156,84	15,28	298,03	280,62	179,01	381,91	348,76
38	417,04	71,78	141,90	15,08	297,20	278,26	182,88	384,03	348,12
39	373,37	72,44	129,12	14,99	296,27	276,10	186,39	380,13	346,76
40	348,96	72,56	121,47	14,98	295,51	274,36	189,49	371,64	345,10
41	331,28	72,69	136,40	14,88	294,68	272,57	192,21	362,39	342,56
42	466,13	72,66	188,67	14,68	293,78	270,85	194,87	366,95	339,87
43	474,47	72,97	164,38	14,48	295,14	269,36	198,94	380,80	337,63
44	315,93	72,67	165,13	14,68	298,45	268,39	203,29	372,58	335,32
45	429,60	73,09	190,36	14,18	300,74	267,80	207,22	372,55	332,70
46	478,03	73,27	156,10	13,88	304,85	267,33	211,41	389,38	330,85
47	526,21	72,92	153,75	13,68	309,59	267,34	215,31	417,56	329,58
48	526,54	73,20	150,81	13,48	314,44	267,71	219,16	442,93	329,00
49	517,14	72,86	147,90	13,28	319,79	268,48	223,02	462,84	329,24
50	505,72	73,25	145,75	13,08	325,32	269,41	226,86	476,68	330,00
51	494,35	72,20	143,58	12,98	330,99	270,67	230,72	486,50	330,68
52	487,21	73,00	141,06	12,78	335,77	272,05	234,66	492,77	331,36
53	481,44	74,18	140,08	12,68	340,19	273,45	238,44	496,59	331,97
54	477,18	74,26	138,70	12,48	343,53	274,51	242,33	500,16	332,37
55	472,71	74,51	137,39	12,38	346,53	275,47	246,07	501,51	332,44
56	471,37	74,20	137,15	12,24	348,89	276,31	249,71	502,33	332,53
57	472,56	74,45	136,66	12,08	350,98	276,68	253,24	506,59	332,45
58	475,82	74,54	136,31	11,88	352,55	277,16	256,80	509,05	332,49
59	477,66	74,15	137,47	11,78	354,32	277,72	260,18	510,63	332,11
60	482,84	74,71	138,22	11,58	355,31	278,24	263,59	513,95	332,00
61	519,48	74,33	142,49	11,38	357,11	278,59	266,87	521,06	332,37
62	566,20	74,67	149,35	11,18	358,86	279,08	270,07	534,34	335,85
63	590,36	74,73	155,24	10,98	360,90	279,79	273,17	548,77	342,57
64	616,78	75,01	160,91	10,68	363,86	281,22	276,17	570,12	351,85
65	633,28	74,90	164,72	10,48	367,69	284,28	279,22	589,15	361,81
66	638,57	75,18	167,42	10,18	373,22	288,65	282,14	607,55	372,88
67	637,97	75,43	168,34	9,88	379,61	293,78	285,02	623,33	384,29
68	641,77	75,42	169,95	9,68	386,87	300,22	287,89	634,37	395,49
69	643,04	75,69	170,70	9,38	395,55	307,39	290,64	643,65	406,45
70	642,55	75,64	170,78	9,18	403,97	314,96	293,40	650,98	417,08
71	643,39	75,86	171,71	8,98	412,55	323,27	296,20	657,58	426,66
72	641,42	76,00	171,72	8,68	420,90	331,78	298,99	661,48	436,09
73	641,72	76,28	171,69	8,48	429,24	340,32	301,71	665,80	444,52
74	641,64	76,57	171,78	8,24	437,16	349,09	304,49	668,15	452,63
75	641,51	76,25	171,71	8,08	445,49	357,50	307,38	669,55	460,09
76	641,68	76,34	171,78	7,78	452,80	366,14	310,20	670,80	467,21
77	641,00	76,51	171,62	7,58	459,88	374,64	313,15	670,87	474,22
78	640,54	76,56	171,66	7,38	466,11	383,14	316,05	671,43	480,62
79	639,34	77,02	171,34	7,16	472,02	391,38	319,09	674,06	486,73
80	638,32	76,39	170,68	6,97	477,63	399,30	322,16	674,61	492,65
81	636,81	76,78	170,65	6,78	483,64	407,14	325,42	673,68	498,31
82	637,36	76,87	170,22	6,56	488,42	414,66	328,60	674,19	503,75
83	633,68	77,24	170,37	6,37	493,37	421,88	332,09	674,28	509,08
84	632,34	77,20	169,62	6,18	497,22	428,92	335,32	672,77	513,94
85	631,27	76,57	168,91	5,98	501,34	435,85	338,99	673,25	518,82
86	630,46	76,70	168,27	5,77	505,64	441,98	342,60	672,49	523,51
87	630,84	77,31	167,75	5,57	508,99	447,91	346,41	670,54	528,08
88	628,20	77,46	167,59	5,38	511,72	453,63	350,19	672,18	532,57
89	626,60	77,78	167,46	5,28	514,98	459,28	354,03	670,55	537,03
90	622,87	77,83	166,09	5,07	517,56	464,37	358,13	671,39	541,11
91	622,49	77,40	166,09	4,97	521,63	469,25	362,23	671,79	544,56

92	619,15	77,56	164,82	4,71	523,23	473,88	366,71	671,88	547,11
93	614,62	78,11	163,66	4,58	526,38	477,86	371,00	670,67	549,12
94	610,42	77,78	162,83	4,48	528,92	481,73	375,50	666,68	550,68
95	606,34	77,13	161,67	4,27	530,47	485,17	380,02	664,53	551,72
96	603,17	78,36	160,80	4,17	531,74	488,55	384,50	660,43	552,17
97	602,59	78,49	160,54	4,08	534,07	491,19	389,37	657,16	552,40
98	600,19	78,30	159,98	3,98	534,99	494,20	393,85	655,14	552,44
99	596,82	78,14	159,01	3,77	536,76	496,73	398,78	651,43	552,58
100	595,63	78,17	158,27	3,69	537,55	498,52	403,56	650,21	552,26
101	592,36	78,24	158,01	3,57	538,98	500,66	408,47	648,75	551,84
102	590,42	78,42	156,87	3,47	539,91	502,10	413,34	648,81	551,29
103	586,40	78,39	156,53	3,38	540,74	503,87	418,35	647,42	550,91
104	557,68	78,38	183,37	2,48	541,93	505,56	423,71	641,44	550,29
105	471,16	78,97	238,36	16,98	541,51	509,39	430,64	608,08	549,53
106	589,53	78,45	222,81	16,68	540,37	510,70	436,83	591,66	545,40
107	645,47	78,52	197,48	16,38	537,32	510,78	441,99	601,53	542,45
108	696,48	78,91	196,25	16,08	534,25	508,70	446,20	633,77	540,28
109	705,80	79,30	195,25	15,78	532,53	506,17	450,11	662,62	540,18
110	712,93	78,63	195,10	15,48	530,31	502,94	453,38	686,67	541,06
111	723,94	78,92	195,33	15,18	528,16	499,26	456,04	707,12	543,32
112	739,20	78,77	196,40	14,88	527,59	494,49	458,61	727,32	545,80
113	746,88	79,36	199,09	14,48	527,70	489,97	460,77	745,63	549,30
114	754,86	79,21	200,84	14,18	526,93	485,71	462,37	764,51	552,99
115	754,58	79,20	201,79	13,88	527,06	481,68	463,46	774,83	557,11
116	754,60	79,17	201,97	13,58	528,29	477,12	464,37	786,15	561,41
117	760,41	79,65	202,61	13,28	529,38	472,69	464,76	793,86	565,68
118	721,77	80,05	192,67	12,98	530,99	469,23	465,05	799,84	570,24
119	652,65	79,91	175,04	12,78	531,70	465,86	464,90	796,14	574,04
120	574,28	79,93	155,58	12,58	532,99	463,03	464,37	780,89	577,01
121	530,32	79,61	145,02	12,48	532,81	459,08	463,87	758,10	578,19
122	499,43	79,59	137,73	12,38	531,02	456,09	463,15	733,86	577,20
123	475,53	79,22	132,41	12,28	527,21	453,04	462,01	711,92	574,37
124	454,69	79,88	128,65	12,14	523,02	449,63	460,81	687,60	570,01
125	433,93	79,39	124,99	12,08	517,31	445,55	459,59	668,22	564,03
126	416,81	79,64	122,56	11,98	511,51	441,62	458,26	646,94	557,13
127	403,12	79,14	120,37	11,84	504,72	437,29	456,70	627,35	549,33
128	392,03	79,04	119,00	11,78	498,44	433,19	455,17	606,08	541,06
129	381,31	78,76	117,72	11,68	490,90	429,44	453,37	590,39	532,53
130	372,03	79,31	115,75	11,58	483,70	425,22	451,64	572,55	523,96
131	362,68	79,07	114,66	11,48	477,19	421,37	449,72	560,56	515,59
132	354,30	78,92	113,77	11,38	469,97	417,24	447,62	548,36	506,89
133	340,85	79,55	112,28	11,28	463,42	412,70	445,63	534,26	498,81
134	437,60	79,33	161,38	11,08	457,59	409,15	443,49	518,63	490,71
135	471,70	78,92	135,19	10,98	451,29	404,81	441,25	526,37	484,16
136	442,76	79,27	125,08	10,78	446,77	401,10	438,82	539,66	479,44
137	434,27	79,08	121,90	10,68	442,56	398,18	436,57	553,38	476,40
138	428,90	78,94	119,88	10,48	439,55	394,88	434,37	561,93	474,75
139	425,49	79,55	118,30	10,38	436,10	392,13	432,13	570,21	474,06
140	421,89	79,33	116,63	10,26	433,37	389,95	429,92	580,83	473,95
141	417,63	79,38	115,28	10,18	430,19	387,51	427,62	587,83	474,67
142	415,32	79,16	115,09	9,98	427,62	386,02	425,24	585,17	475,25
143	413,80	78,93	114,49	9,88	424,26	384,47	423,13	584,49	475,57
144	410,17	78,88	113,77	9,78	421,27	382,80	420,87	585,01	475,88
145	407,99	79,77	113,44	9,68	419,45	381,52	418,81	581,85	475,78
146	406,28	79,20	113,27	9,58	416,16	380,25	416,59	578,69	475,76
147	404,60	79,00	112,60	9,38	414,37	378,80	414,53	579,27	475,52
148	402,17	79,06	112,59	9,28	412,13	377,45	412,27	575,50	475,09
149	400,23	79,64	111,45	9,18	410,37	375,47	410,17	577,08	474,58
150	401,05	79,22	111,64	9,07	408,05	374,23	408,05	574,13	473,91
151	402,50	79,24	111,26	8,98	406,37	372,76	406,16	571,35	473,45
152	403,25	79,81	111,32	8,88	404,69	371,67	404,09	570,06	472,67
153	404,83	79,62	111,55	8,77	402,86	370,88	402,26	570,18	472,27
154	407,11	79,43	112,01	8,58	400,88	369,64	400,39	571,70	471,69
155	408,64	79,14	111,91	8,47	399,45	368,73	398,60	574,12	470,97
156	410,19	79,40	111,89	8,37	398,06	367,76	396,89	575,86	470,40
157	411,72	79,72	112,05	8,28	397,10	367,27	395,18	577,02	469,70
158	414,11	80,11	111,72	8,18	396,27	366,22	393,53	579,85	469,27
159	414,84	80,43	112,60	7,98	395,42	365,98	391,42	582,63	469,00
160	416,67	80,31	112,63	7,88	394,92	365,34	389,71	584,69	468,95
161	418,56	79,97	112,55	7,77	394,07	364,85	388,45	587,55	469,01
162	420,62	80,32	112,70	7,67	393,95	364,59	386,95	591,44	469,21
163	417,95	80,69	112,08	7,58	393,71	363,93	385,62	594,16	469,17
164	408,89	80,63	111,72	7,48	393,96	363,63	384,15	600,77	469,27
165	404,55	80,73	111,11	7,38	394,13	364,00	382,77	599,30	469,33
166	400,89	80,13	110,56	7,28	394,35	364,03	381,32	599,95	469,07
167	397,66	80,56	110,53	7,17	394,26	364,22	380,07	597,93	468,66
168	395,10	80,91	110,50	7,07	394,25	364,36	378,87	598,29	467,76
169	394,30	80,37	109,99	6,88	394,38	364,59	377,57	596,76	466,93
170	392,12	80,69	110,22	6,88	394,04	365,07	376,46	597,34	465,96
171	388,51	80,56	109,66	6,78	394,22	365,25	375,31	599,07	465,25
172	388,23	80,71	110,16	6,68	394,07	365,89	374,27	594,77	463,96
173	387,28	81,05	109,37	6,58	393,64	365,94	373,26	597,32	462,67
174	389,36	80,55	109,84	6,47	394,48	366,46	372,07	597,53	461,92
175	394,59	80,49	110,13	6,37	394,48	366,93	371,10	599,70	461,02
176	392,84	80,83	110,06	6,27	394,86	367,15	370,16	598,88	460,72
177	387,09	81,29	109,31	6,12	395,39	367,50	369,23	599,80	460,70
178	381,72	80,89	108,61	6,08	396,23	367,73	368,21	599,36	460,38
179	377,89	81,13	109,28	5,98	396,54	368,33	367,39	599,13	459,95
180	375,21	80,99	108,86	5,89	397,33	368,75	366,55	598,69	459,27
181	373,14	81,16	108,83	5,77	397,86	369,18	365,62	591,96	458,59
182	370,99	81,24	108,39	5,77	398,38	369,63	364,82	591,80	457,64
183	370,57	80,67	108,32	5,67	399,22	369,88	363,95	589,34	456,51
184	370,47	79,92	107,43	5,57	399,99	369,98	363,10	587,62	455,40
185	369,74	79,69	107,15	5,48	400,55	370,14	362,33	586,51	454,30
186	369,48	79,92	107,59	5,47	400,82	370,12	361,51	582,97	453,37

187	368,87	79,19	106,80	5,27	401,41	370,13	360,84	585,04	452,32
188	369,28	78,57	106,46	5,27	402,34	370,21	360,17	584,58	451,41
189	369,14	78,83	106,35	5,17	402,82	370,11	359,42	585,30	450,70
190	370,58	78,86	106,26	5,07	403,72	370,04	358,73	585,09	449,92
191	370,78	78,48	106,17	4,97	404,00	370,37	357,99	585,05	449,36
192	369,22	78,96	106,33	4,96	405,55	370,47	357,27	584,23	448,92
193	366,91	78,97	105,52	4,80	406,52	370,64	356,73	584,13	448,78
194	367,19	78,04	105,93	4,78	407,51	371,07	356,09	579,53	448,69
195	367,97	77,93	105,61	4,67	407,13	371,27	355,61	577,75	449,06
196	365,95	78,59	105,98	4,57	407,42	371,25	355,05	576,46	450,08
197	363,58	78,04	105,07	4,57	407,51	371,76	354,39	575,92	450,66
198	361,38	78,98	104,59	4,47	407,47	372,20	353,81	572,95	451,03
199	358,46	78,87	104,19	4,37	407,18	372,54	353,40	569,29	451,37
200	356,08	79,25	104,38	4,37	407,61	372,82	352,95	566,62	451,18
201	353,54	79,80	104,37	4,27	407,84	373,25	352,56	560,95	450,63
202	350,82	79,83	103,87	4,17	408,38	373,09	352,15	558,53	449,62
203	349,72	79,83	103,69	4,17	409,36	373,33	351,68	550,58	448,42
204	344,76	79,12	103,68	4,08	410,05	373,01	351,34	553,01	446,80
205	340,59	79,04	103,16	4,08	411,02	373,04	350,79	545,10	444,94
206	336,17	79,17	102,93	4,08	412,41	372,53	350,47	541,21	442,73
207	333,38	79,01	102,63	3,97	412,85	372,50	350,05	534,39	440,58
208	330,81	77,03	102,13	3,94	413,60	372,44	349,77	530,75	438,61
209	328,61	77,55	101,84	3,87	413,79	372,51	349,46	525,48	436,79
210	326,91	77,86	101,40	3,87	414,34	372,30	349,15	522,83	434,40
211	324,74	77,58	101,66	3,77	414,26	372,63	348,94	520,62	432,37
212	322,94	77,34	100,96	3,77	414,33	372,63	348,68	517,15	430,54
213	320,89	76,70	101,09	3,67	414,22	373,10	348,53	510,04	428,79
214	317,79	77,22	100,94	3,67	414,47	373,41	348,34	508,78	426,98
215	315,44	77,10	100,62	3,67	414,29	373,96	348,19	506,46	425,31
216	314,84	77,34	100,45	3,57	413,96	374,30	348,02	503,88	423,96
217	313,12	77,20	100,33	3,47	413,84	375,12	347,93	501,10	422,26
218	313,40	77,40	99,97	3,47	413,50	375,73	347,82	497,88	420,81
219	312,55	76,64	100,00	3,47	412,82	376,57	347,85	495,23	419,61
220	312,54	77,13	99,87	3,37	412,56	377,50	347,66	493,44	418,46
221	312,04	76,19	99,81	3,37	412,23	378,33	347,67	488,95	417,12
222	310,64	76,67	99,80	3,27	411,80	379,26	347,56	487,50	416,15
223	308,09	76,85	99,46	3,27	411,55	380,51	347,49	486,29	415,14
224	308,86	76,44	99,32	3,17	411,14	381,70	347,53	480,46	414,08
225	308,67	76,66	99,39	3,18	410,52	383,17	347,70	481,60	413,22
226	306,45	75,66	98,99	3,17	409,62	384,52	347,78	479,70	412,14
227	305,16	75,58	98,90	3,07	408,99	385,93	347,73	475,19	411,08
228	303,14	76,39	98,52	3,07	408,47	386,72	347,79	473,86	409,95
229	300,23	75,94	98,14	2,98	407,18	387,51	347,87	471,47	408,85
230	294,30	75,80	97,80	2,97	406,85	388,46	348,07	469,63	407,79
231	290,77	77,07	97,67	2,97	406,03	389,27	348,09	465,46	406,45
232	288,05	76,15	97,27	2,97	404,50	390,26	348,25	460,75	405,20
233	284,80	76,12	97,28	2,87	402,96	391,06	348,31	453,51	403,92
234	279,77	75,79	96,63	2,87	401,90	392,01	348,39	447,91	402,47
235	275,36	75,72	96,57	2,87	400,25	392,97	348,51	441,98	401,03
236	272,02	75,25	95,90	2,77	397,97	394,32	348,67	435,14	399,49
237	269,79	75,32	95,59	2,77	396,56	395,56	348,71	427,31	397,89
238	267,64	75,96	95,22	2,77	395,09	396,62	348,75	422,39	396,23
239	265,33	76,07	95,03	2,77	393,29	397,73	348,87	417,33	394,61
240	264,04	75,59	94,82	2,77	391,63	398,87	349,04	410,80	393,12
241	262,46	76,01	95,05	2,77	390,01	399,84	349,08	406,53	391,49
242	261,48	76,13	94,66	2,67	388,29	401,15	349,22	403,20	390,14
243	260,25	76,29	94,51	2,67	386,79	402,18	349,37	399,04	388,73
244	258,98	75,59	94,43	2,67	385,16	403,39	349,58	396,00	387,34
245	258,02	75,69	94,50	2,67	384,11	404,35	349,81	391,69	385,94
246	257,60	76,18	94,26	2,57	382,65	405,61	349,99	390,86	384,60
247	256,35	75,39	94,12	2,57	381,32	407,20	350,10	387,73	383,44
248	255,10	75,45	94,45	2,57	380,36	408,82	350,31	382,23	382,27
249	254,49	74,39	93,90	2,57	379,35	410,07	350,55	381,08	381,21
250	253,80	74,92	93,57	2,54	378,28	411,69	350,75	378,54	380,28
251	252,41	75,44	93,25	2,47	377,16	413,07	351,11	378,24	379,25
252	251,89	75,15	93,50	2,47	376,41	414,38	351,26	375,91	378,28
253	251,03	75,88	93,30	2,47	375,82	415,99	351,57	375,31	377,45
254	249,61	76,95	93,44	2,47	374,96	417,20	351,90	373,85	376,88
255	248,94	77,04	93,58	2,37	374,19	418,44	352,12	372,81	376,14
256	248,05	76,93	93,01	2,37	373,35	419,51	352,40	371,64	375,35
257	247,61	77,11	93,02	2,37	372,36	420,61	352,71	371,02	374,67
258	246,87	76,98	93,10	2,37	371,18	421,42	353,07	368,13	374,05
259	245,99	76,51	93,03	2,37	370,88	422,58	353,30	367,52	373,30
260	245,26	76,75	92,88	2,37	370,32	423,37	353,62	366,85	372,88
261	244,76	76,98	93,02	2,36	369,59	424,03	353,99	365,40	372,12
262	244,11	77,22	92,87	2,27	368,78	424,78	354,29	361,83	371,52
263	243,04	77,50	92,90	2,27	367,94	425,53	354,69	362,29	371,25
264	242,69	78,03	92,81	2,27	367,40	426,16	355,03	357,26	370,43
265	241,71	77,95	92,68	2,27	366,86	426,42	355,32	357,57	369,87
266	240,81	77,72	92,94	2,23	366,15	426,94	355,80	357,24	369,29
267	240,11	78,14	92,51	2,17	365,62	427,45	356,06	352,66	368,65
268	239,11	78,37	92,67	2,17	364,66	427,70	356,45	354,57	368,18
269	238,78	78,39	92,55	2,17	364,06	427,92	356,80	354,29	367,69
270	238,24	78,52	92,63	2,17	363,62	428,05	356,96	353,94	367,05
271	237,60	77,81	92,48	2,17	362,77	428,09	357,27	353,32	366,49
272	237,50	77,57	92,69	2,16	361,83	427,99	357,51	351,65	366,11
273	237,14	77,45	92,55	2,07	361,41	428,10	357,77	351,06	365,38
274	236,45	78,36	92,52	2,07	361,12	428,02	358,01	351,30	364,79
275	235,90	77,78	92,64	2,07	360,52	427,86	358,19	350,41	364,11
276	235,44	76,69	92,54	2,07	359,83	427,45	358,55	349,73	363,46
277	235,18	75,83	91,81	1,97	359,36	427,34	358,76	348,95	362,81
278	235,01	76,72	91,99	1,97	358,61	427,00	358,97	348,45	362,14
279	234,36	76,13	91,78	1,97	358,24	426,99	359,16	347,81	361,49
280	234,10	77,11	91,70	1,97	357,44	426,80	359,27	346,89	360,85
281	233,36	76,66	91,48	1,97	356,78	426,41	359,49	345,91	360,33

282	233,13	77,37	91,78	1,97	356,38	426,23	359,66	342,07	359,78
283	232,33	78,20	91,55	1,87	356,18	426,37	359,75	339,02	359,31
284	231,66	77,18	91,91	1,87	355,36	426,09	360,03	338,66	358,77
285	231,11	77,74	91,61	1,87	354,53	425,83	360,14	339,63	358,39
286	231,06	77,21	91,50	1,87	354,03	425,64	360,38	339,83	357,85
287	230,71	76,20	91,24	1,87	353,23	425,21	360,46	339,66	357,39
288	230,58	75,58	91,19	1,83	352,10	425,08	360,52	337,44	356,90
289	230,48	75,94	91,32	1,77	351,92	424,81	360,58	334,52	356,09
290	229,65	75,82	91,26	1,77	351,43	424,30	360,64	334,92	355,54
291	229,30	74,57	90,98	1,77	350,24	424,10	360,64	332,63	355,23
292	229,51	73,71	90,78	1,69	349,25	423,49	360,65	331,43	354,65
293	229,19	74,99	90,63	1,77	348,94	423,28	360,53	332,32	354,01
294	228,28	74,70	90,64	1,77	348,84	422,92	360,60	333,02	353,53
295	228,04	75,73	90,62	1,67	348,15	423,05	360,61	333,60	352,89
296	227,55	76,21	90,60	1,67	347,99	422,82	360,67	332,17	352,53
297	227,57	76,05	90,79	1,67	347,29	422,64	360,74	332,76	352,03
298	227,51	75,10	90,59	1,67	346,21	422,35	360,59	332,91	351,59
299	227,05	75,44	90,35	1,67	345,75	422,28	360,59	332,66	351,20
300	226,75	74,56	90,38	1,58	345,31	421,72	360,56	332,82	350,72
301	226,41	74,04	90,28	1,57	344,72	421,71	360,59	330,12	350,48
302	226,49	73,58	89,93	1,57	344,14	421,42	360,44	328,87	349,95
303	225,91	73,75	89,67	1,57	343,78	421,13	360,52	329,99	349,30
304	226,08	74,48	89,65	1,57	342,71	420,89	360,37	328,98	349,09
305	226,10	73,95	89,36	1,57	342,09	420,85	360,24	326,63	348,60
306	225,51	73,46	89,37	1,47	341,85	420,28	360,19	326,89	348,24
307	225,56	73,54	89,25	1,47	340,90	420,00	360,15	327,83	347,66
308	225,26	73,53	89,26	1,47	341,03	419,88	360,04	328,15	347,28
309	224,87	73,58	89,34	1,47	340,19	419,47	360,05	326,85	346,93
310	224,82	73,61	89,31	1,47	339,40	419,03	359,93	326,18	346,66
311	225,05	72,52	89,14	1,47	339,49	418,94	359,85	325,26	346,44
312	224,18	73,71	89,22	1,37	339,16	418,84	359,75	326,96	345,96
313	224,05	75,10	89,60	1,37	338,61	418,76	359,81	326,96	345,73
314	223,94	75,12	89,46	1,37	338,67	418,90	359,75	327,45	345,53
315	223,85	76,21	89,54	1,37	338,59	418,93	359,78	326,54	345,42
316	224,01	76,24	89,46	1,37	338,05	418,90	359,75	323,94	345,33
317	223,45	76,06	89,52	1,37	337,66	418,84	359,61	324,49	345,36
318	223,19	76,60	88,98	1,37	337,42	418,93	359,58	322,67	345,42
319	222,97	76,83	89,24	1,27	337,23	419,06	359,48	319,94	345,51
320	222,63	76,58	89,46	1,27	337,23	418,95	359,59	321,52	345,47
321	222,73	76,92	89,44	1,27	336,58	418,87	359,62	322,00	345,51
322	223,01	76,69	89,11	1,27	336,47	418,93	359,55	319,43	345,47
323	222,26	77,07	88,91	1,27	336,44	418,72	359,52	318,45	345,47
324	222,22	77,37	89,02	1,27	335,91	418,65	359,51	317,82	345,44
325	222,40	76,67	88,93	1,17	335,80	418,28	359,32	317,78	345,17
326	222,25	77,12	88,59	1,17	335,64	417,90	359,35	319,05	345,08
327	222,49	77,02	88,53	1,17	335,68	417,89	359,28	317,43	344,85
328	221,77	77,16	88,74	1,17	335,27	417,52	359,26	316,24	344,73
329	221,87	77,05	89,06	1,17	334,99	417,60	359,19	318,87	344,59
330	221,85	76,54	88,78	1,17	335,11	417,28	359,11	316,80	344,42
331	221,58	76,59	89,02	1,07	334,84	417,23	359,05	319,01	344,14
332	221,60	76,51	88,72	1,07	334,41	417,11	359,03	317,41	343,88
333	221,56	76,89	89,26	1,07	334,35	416,57	358,85	319,57	343,63
334	221,94	76,52	89,08	1,07	334,42	416,41	358,80	317,87	343,41
335	221,78	76,73	88,61	1,07	334,62	416,38	358,74	318,14	343,19
336	222,67	76,86	88,39	1,07	334,04	416,04	358,63	316,88	342,94
337	222,07	76,92	88,10	0,97	333,86	415,98	358,53	315,84	342,76
338	221,22	76,93	88,13	0,97	334,23	415,89	358,43	315,64	342,62
339	220,79	77,03	88,63	0,97	333,83	415,60	358,41	319,00	342,33
340	221,27	76,63	88,85	0,97	333,90	415,35	358,14	318,69	342,09
341	221,60	77,02	88,23	0,97	333,88	415,24	357,99	317,44	341,98
342	221,49	77,10	87,98	0,96	333,64	415,17	357,93	316,77	341,79
343	220,54	77,04	87,72	0,89	333,36	415,21	357,81	316,99	341,65
344	219,59	76,24	88,03	0,87	333,05	414,74	357,62	316,37	341,35
345	218,87	77,00	87,31	0,87	333,81	414,06	357,35	315,47	341,11
346	217,86	76,49	87,30	0,87	334,04	413,60	357,28	315,06	340,82
347	217,20	76,94	87,10	0,87	334,49	412,62	356,39	314,67	340,61
348	216,19	77,28	87,08	0,87	334,24	411,21	356,77	314,66	340,24
349	215,95	76,81	86,93	0,87	334,62	410,29	356,76	313,69	339,82
350	215,25	76,82	86,63	0,77	333,35	408,78	356,77	312,85	339,41
351	214,52	77,05	86,42	0,77	333,20	407,15	356,43	312,08	338,73
352	213,67	76,73	86,51	0,77	332,96	405,85	356,54	311,01	338,01
353	213,01	76,95	86,46	0,77	331,81	404,51	356,64	310,91	337,30
354	212,57	77,01	86,48	0,77	330,95	403,28	356,63	311,08	336,62
355	212,23	76,63	86,71	0,77	330,54	401,65	356,57	309,48	335,89
356	211,76	76,33	86,49	0,77	329,61	400,29	356,54	309,23	334,87
357	210,89	76,34	86,47	0,73	328,68	398,91	356,44	307,92	334,05
358	209,91	75,41	86,72	0,67	328,26	397,47	356,44	307,12	333,16
359	209,59	75,61	86,66	0,67	326,29	395,88	356,23	306,55	332,37
360	209,27	76,18	86,29	0,67	325,91	394,13	355,81	305,93	331,29
361	209,02	76,18	86,01	0,67	324,96	392,58	355,98	304,76	330,51
362	208,48	76,34	85,66	0,67	324,67	391,31	355,84	304,26	329,58
363	207,87	76,28	85,79	0,67	322,96	390,26	355,67	303,37	328,83
364	207,94	75,94	85,54	0,57	321,85	388,65	355,50	302,28	327,85
365	207,43	75,54	85,52	0,67	321,29	387,58	355,11	302,89	326,87
366	206,79	75,54	85,89	0,57	320,64	386,19	354,99	301,84	325,98
367	206,18	75,37	85,94	0,57	319,65	385,19	354,76	302,64	325,01
368	206,30	75,63	85,41	0,57	318,95	383,84	354,52	300,68	324,15
369	206,01	75,95	85,06	0,57	317,79	382,90	354,35	299,46	323,52
370	205,54	75,95	85,30	0,57	317,22	381,84	354,16	300,80	322,64
371	204,74	75,09	85,85	0,47	316,24	380,84	353,85	300,95	321,87
372	204,67	75,11	85,91	0,47	315,41	380,00	353,36	299,42	321,23
373	204,57	74,43	85,99	0,49	314,31	378,77	353,20	300,43	320,30
374	204,41	74,95	85,99	0,51	314,17	378,30	352,86	296,91	319,55
375	203,90	74,32	85,95	0,47	313,42	377,14	352,61	299,50	318,75
376	203,52	74,77	85,62	0,47	312,73	376,26	352,31	299,99	317,90

377	203,85	73,32	85,72	0,47	311,66	375,24	351,91	297,82	317,22
378	203,52	74,05	85,36	0,47	311,31	374,27	351,63	296,51	316,39
379	202,82	74,15	85,27	0,47	310,12	373,75	351,34	295,44	315,89
380	202,30	74,13	85,19	0,47	309,74	373,01	350,84	294,50	315,08
381	201,83	74,33	85,51	0,37	309,36	372,03	350,60	293,09	314,36
382	201,98	74,95	85,15	0,37	308,68	371,27	350,30	295,08	313,70
383	201,50	74,66	85,40	0,37	307,75	370,70	349,99	293,48	313,21
384	201,59	74,53	85,29	0,37	307,44	370,17	349,64	292,47	312,41
385	201,66	74,56	85,77	0,37	306,64	369,47	349,42	290,61	311,77
386	201,52	74,64	85,37	0,37	306,39	369,09	349,01	291,71	311,16
387	200,91	75,17	84,93	0,37	306,36	368,39	348,64	291,46	310,79
388	200,92	75,09	85,33	0,27	306,07	368,02	348,39	291,10	310,16
389	200,42	75,64	84,93	0,27	305,45	367,36	348,01	289,73	309,76
390	200,51	75,22	85,03	0,27	305,18	367,04	347,55	291,50	309,39
391	200,56	74,25	84,93	0,27	305,63	366,39	347,28	289,35	308,91
392	200,35	74,60	84,86	0,27	304,34	365,94	346,95	287,87	308,65
393	200,31	75,68	84,66	0,27	304,91	365,41	346,51	287,22	308,19
394	200,12	75,39	84,05	0,27	304,77	364,58	346,19	286,83	307,77
395	199,75	75,51	84,32	0,27	304,11	363,88	345,79	286,13	307,52
396	199,90	75,15	85,09	0,17	304,21	363,79	345,46	286,53	307,32
397	199,73	74,95	85,06	0,17	303,83	363,37	345,09	285,16	307,05
398	199,90	74,74	85,11	0,17	303,69	362,72	344,84	285,09	306,90
399	199,67	74,96	85,12	0,17	303,80	362,47	344,52	287,16	306,85
400	199,35	74,97	84,86	0,17	303,43	362,09	344,27	286,53	306,73
401	199,38	75,34	85,20	0,17	303,08	361,66	343,91	287,42	306,46
402	199,33	74,77	85,55	0,17	303,01	361,18	343,54	286,77	306,49
403	199,22	74,53	85,36	0,07	302,40	360,85	343,23	285,49	306,34
404	198,80	74,72	85,11	0,07	302,18	360,15	342,91	286,97	306,16
405	198,50	74,57	84,65	0,07	302,43	359,49	342,57	284,62	305,86
406	198,56	75,22	84,78	0,07	302,47	359,17	342,25	286,94	305,42
407	198,58	74,14	85,01	0,07	301,63	358,55	342,06	287,68	305,11
408	198,32	73,81	85,14	0,07	301,71	357,95	341,66	287,38	304,73
409	197,98	73,78	85,46	0,07	301,53	357,47	341,50	284,32	304,31
410	197,56	73,53	85,35	0,07	301,52	356,65	341,38	286,07	303,85
411	197,74	73,65	85,00	0,07	301,53	356,50	341,03	285,05	303,45
412	197,42	74,69	84,78	0,07	301,57	356,09	340,69	285,53	302,97
413	197,04	74,18	84,96	0,07	301,38	355,41	340,39	286,06	302,46
414	196,70	74,00	85,17	0,00	300,91	355,22	340,31	286,12	302,01
415	69,43	68,20	72,04	5,97	68,82	68,27	68,15	69,38	68,43
416	101,59	68,36	77,24	5,87	68,77	68,16	68,01	72,63	68,50
417	147,62	68,59	77,49	5,77	69,39	68,30	67,93	82,23	69,10
418	249,39	68,25	85,12	5,67	71,05	69,29	67,89	108,60	71,04
419	364,43	68,48	99,64	5,48	74,99	71,41	67,87	152,52	77,17
420	443,69	69,06	113,11	5,23	81,75	75,59	67,87	206,70	86,27
421	604,61	69,68	138,45	4,87	95,63	81,70	67,85	295,48	98,39
422	642,81	70,27	153,29	4,57	111,00	90,03	67,98	387,71	114,40
423	708,13	70,60	167,15	4,17	125,97	99,38	68,17	471,71	130,94
424	697,51	71,04	174,93	3,87	142,24	109,17	68,53	543,98	148,49
425	680,24	71,59	175,77	3,57	159,31	119,34	69,15	592,48	167,16
426	660,77	71,25	174,55	3,37	177,53	130,10	70,20	619,46	190,33
427	645,07	70,90	171,86	3,07	196,23	140,94	71,78	636,67	212,93
428	621,82	71,50	168,48	2,87	213,88	151,56	73,96	640,26	233,32
429	501,88	71,56	230,33	17,88	229,92	161,69	76,90	615,01	251,45
430	468,63	71,40	228,99	17,73	242,38	171,53	80,65	576,75	265,16
431	521,48	72,03	258,34	17,48	252,97	181,45	84,93	547,96	275,47
432	624,22	72,10	302,65	17,08	262,22	190,38	89,52	538,14	284,74
433	670,34	71,40	323,72	16,58	271,23	198,61	94,24	539,25	294,22
434	612,81	71,60	229,71	16,38	282,15	206,02	99,16	550,71	304,38
435	564,55	71,52	197,58	16,18	292,95	212,73	103,94	553,49	313,03
436	556,19	71,36	182,15	16,08	302,14	218,83	108,76	553,61	320,09
437	558,31	71,00	173,56	15,88	309,47	224,18	113,28	555,12	325,32
438	567,84	70,55	169,78	15,68	316,21	228,99	117,75	558,41	329,46
439	572,66	71,10	167,57	15,48	322,65	233,20	122,14	564,36	332,82
440	582,69	70,98	167,06	15,28	328,97	237,12	126,43	572,68	336,28
441	583,22	70,97	166,96	15,18	334,62	241,30	130,62	580,06	339,61
442	586,74	70,37	166,96	14,88	340,25	245,79	134,78	587,34	343,14
443	592,13	72,09	166,57	14,68	345,65	249,99	138,73	594,12	346,82
444	588,41	70,83	165,78	14,50	350,72	253,85	142,66	598,31	350,89
445	581,48	70,43	164,50	14,38	355,89	257,81	146,33	599,86	354,32
446	575,02	71,56	163,60	14,18	360,45	261,40	149,96	598,54	357,72
447	570,46	71,76	162,17	13,99	364,53	264,70	153,41	598,12	360,39
448	561,48	71,92	160,56	13,88	368,73	267,76	156,80	594,93	363,09
449	554,70	71,56	158,76	13,68	371,70	270,39	160,06	590,03	365,46
450	545,48	71,45	156,74	13,58	375,53	272,92	163,32	584,43	367,05
451	536,08	71,14	155,14	13,38	377,79	274,94	166,43	576,68	368,67
452	527,97	71,12	152,97	13,28	379,85	276,75	169,55	569,75	369,53
453	520,65	71,73	151,12	13,08	380,63	278,35	172,51	562,92	370,23
454	513,96	71,47	149,92	12,98	382,10	279,51	175,46	556,78	370,01
455	505,46	70,61	147,87	12,88	382,90	280,44	178,36	548,88	369,41
456	499,18	70,89	145,95	12,68	382,91	281,15	181,30	539,66	368,61
457	494,49	71,62	144,91	12,58	382,89	281,79	184,31	533,79	367,40
458	492,10	70,85	143,94	12,41	383,02	282,24	187,77	525,49	366,10
459	488,07	70,44	142,81	12,28	383,22	282,45	191,31	519,65	364,39
460	484,28	70,92	142,11	12,18	382,57	282,57	194,73	513,74	363,01
461	479,81	71,01	140,69	12,08	382,71	282,72	198,04	508,12	361,30
462	476,94	70,08	140,00	11,88	382,41	282,91	201,26	502,96	359,85
463	474,00	70,35	138,87	11,78	382,42	283,21	204,38	498,86	358,42
464	469,76	69,89	137,87	11,68	382,52	283,24	207,68	494,76	356,94
465	469,24	70,05	137,22	11,48	382,40	283,39	210,93	490,32	355,48
466	470,31	69,87	136,81	11,38	382,39	283,37	214,10	488,09	354,26
467	474,56	70,60	137,18	11,28	382,24	283,72	217,17	486,02	353,07
468	482,64	69,98	137,86	11,18	381,89	283,75	220,25	485,94	352,10
469	491,02	70,06	139,27	10,98	382,01	283,91	222,99	490,01	351,49
470	504,69	70,73	140,97	10,88	382,54	284,52	226,18	494,96	351,67
471	515,37	71,19	144,17	10,68	383,39	285,82	229,09	502,13	352,38

472	521,30	71,94	146,27	10,48	385,06	287,62	231,92	508,24	353,94
473	525,51	71,92	148,50	10,38	386,84	290,12	234,70	514,55	356,19
474	529,87	72,22	150,11	10,25	389,25	293,16	237,70	520,24	359,16
475	532,01	73,05	151,18	10,08	392,09	296,77	240,47	525,24	362,70
476	538,71	72,61	152,12	9,88	394,91	300,92	243,35	530,67	366,74
477	548,74	73,33	152,91	9,68	397,86	305,15	246,27	536,73	371,10
478	558,18	72,34	154,27	9,58	401,22	309,60	248,96	542,04	375,78
479	566,48	72,27	155,47	9,38	404,82	313,95	252,06	549,97	380,99
480	574,42	72,35	155,82	9,17	408,03	318,25	254,69	557,19	386,56
481	581,71	72,18	156,74	9,07	411,04	322,47	257,78	564,13	392,47
482	588,05	72,09	158,22	8,88	413,86	326,79	260,60	569,36	398,87
483	591,50	71,88	159,22	8,67	417,08	330,88	263,50	575,05	405,77
484	590,85	71,87	159,15	8,47	420,56	335,38	266,28	579,83	413,17
485	589,48	71,35	159,02	8,28	423,17	339,71	269,04	585,54	420,68
486	588,90	71,22	159,37	8,18	426,06	344,19	271,62	591,10	428,17
487	587,34	71,08	159,32	7,98	428,87	348,69	274,69	594,38	435,41
488	584,15	72,15	158,76	7,77	432,28	353,16	277,87	595,76	442,20
489	581,90	71,75	158,36	7,67	435,26	358,00	280,23	596,35	448,12
490	581,59	71,21	157,80	7,48	438,45	362,62	283,83	595,12	453,79
491	578,22	71,66	157,82	7,32	441,00	367,45	286,74	595,91	458,77
492	576,03	71,39	156,88	7,17	443,85	372,13	289,90	594,70	463,52
493	574,02	71,32	155,94	7,01	446,19	376,59	292,90	593,68	467,68
494	571,67	71,49	155,29	6,88	448,39	381,10	296,10	593,11	471,46
495	571,23	71,43	153,97	6,70	450,45	385,51	299,33	591,49	475,03
496	568,06	71,93	153,84	6,57	452,27	389,83	302,69	590,91	478,25
497	567,41	71,52	154,22	6,47	453,72	393,87	306,68	589,13	481,15
498	566,52	72,13	154,02	6,27	455,36	398,37	310,05	588,71	483,80
499	565,16	71,69	153,94	6,18	457,01	402,96	313,59	587,62	486,03
500	565,16	71,81	153,08	6,08	458,02	407,21	317,24	586,06	488,08
501	563,29	71,37	153,35	5,87	459,35	411,70	320,73	585,32	490,05
502	562,52	72,18	152,96	5,77	460,52	416,04	324,33	585,35	491,79
503	562,89	73,01	152,47	5,67	461,60	420,42	328,16	584,43	493,48
504	560,80	71,85	152,42	5,48	462,40	424,67	332,23	582,98	495,42
505	560,89	71,34	152,11	5,38	463,47	429,39	336,03	582,35	497,06
506	560,85	71,35	151,13	5,27	464,25	434,38	339,74	581,86	498,53
507	559,61	71,89	150,80	5,17	464,93	438,92	343,72	579,50	499,73
508	559,43	71,94	150,58	5,07	465,43	443,78	347,09	577,90	500,92
509	558,04	71,96	150,20	4,87	465,66	448,29	350,90	576,00	502,06
510	557,55	72,07	150,14	4,78	466,19	452,91	354,67	574,66	502,99
511	558,60	72,14	149,92	4,68	466,25	456,48	358,74	573,20	503,87
512	558,57	72,62	150,07	4,57	466,65	460,52	362,08	574,44	504,91
513	559,07	72,79	150,12	4,47	466,70	463,53	366,36	573,57	505,98
514	560,41	73,46	150,49	4,37	466,24	466,66	369,19	573,64	506,12
515	558,87	73,50	150,19	4,27	466,95	469,68	372,67	575,23	506,75
516	559,65	73,87	150,29	4,17	466,62	472,42	376,31	575,67	507,32
517	556,62	72,54	149,48	4,08	466,63	475,16	379,25	574,84	507,92
518	554,50	71,57	148,49	3,87	466,65	477,67	383,57	573,57	508,54
519	551,25	68,76	147,35	3,77	466,08	480,57	386,98	574,52	509,11
520	546,77	71,26	147,22	3,67	465,84	484,01	390,09	573,42	509,41
521	538,11	72,69	147,39	3,57	465,66	487,01	393,47	569,60	509,07
522	528,05	73,54	146,04	3,47	465,07	489,50	396,37	563,03	508,41
523	518,69	73,77	144,95	3,47	464,70	491,76	399,71	555,82	507,33
524	511,47	73,82	145,11	3,47	463,60	493,54	402,97	547,23	505,75
525	503,83	74,21	144,19	3,38	462,75	495,41	406,48	539,27	504,34
526	497,81	74,76	143,55	3,27	461,55	497,22	409,83	531,35	501,95
527	492,08	74,73	143,64	3,27	459,02	498,73	413,02	523,81	499,54
528	486,11	74,77	143,45	3,17	457,06	499,60	416,39	516,63	497,00
529	481,87	74,74	142,71	3,17	455,30	500,71	419,56	508,88	494,37
530	477,25	75,42	142,20	3,14	452,83	501,31	422,75	502,82	491,61
531	472,72	75,56	141,34	3,07	450,46	501,79	425,82	496,66	488,68
532	448,00	76,91	154,57	0,07	448,51	502,31	429,47	490,96	486,24
533	402,43	76,42	192,78	17,78	445,89	504,23	434,15	469,00	482,28
534	617,84	76,70	256,14	18,88	442,06	503,25	438,56	475,67	477,37
535	619,08	76,27	226,33	15,98	440,20	500,63	442,38	497,82	473,04
536	581,33	76,48	197,80	15,78	439,57	497,76	445,70	510,95	470,10
537	646,20	76,80	197,67	15,48	439,18	493,59	448,61	544,28	468,00
538	638,79	76,64	193,36	15,18	440,49	489,42	450,98	575,45	467,72
539	651,31	76,60	192,59	14,88	443,22	484,51	453,04	602,13	468,63
540	665,17	76,88	194,38	14,68	447,04	479,99	454,68	627,11	470,85
541	670,56	77,67	195,40	14,38	451,28	475,69	455,74	651,38	474,13
542	665,45	77,75	194,50	14,08	456,42	471,03	456,61	667,86	478,22
543	658,92	77,58	193,26	13,88	461,70	466,89	457,09	678,84	482,86
544	656,87	78,22	191,83	13,68	467,74	463,09	457,21	685,14	487,44
545	654,27	77,69	191,43	13,38	473,20	459,17	456,77	690,42	492,07
546	623,83	77,91	181,15	13,18	477,69	455,58	456,46	692,63	496,55
547	566,54	78,08	165,62	12,98	482,35	451,69	455,80	695,22	500,37
548	507,11	78,08	151,53	12,88	486,67	448,83	454,97	688,86	502,34
549	475,04	77,84	143,48	12,68	489,10	445,61	453,93	673,84	503,16
550	451,08	78,34	137,91	12,58	490,22	442,51	452,71	662,09	502,45
551	431,09	77,95	133,68	12,48	489,84	439,21	451,46	646,54	500,45
552	410,60	75,76	129,35	12,38	485,93	435,29	450,09	623,48	497,17
553	402,65	72,48	131,20	12,34	481,82	430,61	448,28	602,97	492,44
554	583,41	72,58	191,67	12,08	477,21	426,77	446,54	590,65	487,74
555	602,51	74,64	175,25	11,78	473,26	422,39	444,90	600,50	484,41
556	509,51	75,91	152,25	11,60	471,89	418,31	443,21	612,74	482,70
557	475,74	75,70	142,79	11,48	470,98	415,32	441,26	620,45	482,75
558	456,26	76,32	137,47	11,38	470,26	412,00	439,34	622,43	483,45
559	440,31	77,25	133,71	11,28	468,93	409,16	437,35	619,44	483,50
560	425,55	77,39	130,72	11,18	466,25	406,33	435,32	615,86	483,15
561	413,05	77,30	128,53	11,08	463,08	403,25	433,41	607,83	481,67
562	391,07	77,46	125,91	10,98	458,97	400,44	431,47	595,94	479,49
563	415,15	78,76	199,61	10,88	454,78	398,32	429,42	565,14	476,32
564	508,77	78,68	190,92	10,58	449,27	395,03	427,54	553,29	473,15
565	459,91	79,02	155,27	10,38	447,56	391,72	425,60	560,94	471,12
566	473,42	79,31	237,37	10,28	446,85	388,78	423,78	548,03	470,00

567	515,25	78,85	179,83	9,98	445,68	386,39	421,73	561,33	469,19
568	484,13	78,67	157,72	9,78	446,79	384,87	419,97	580,88	469,61
569	473,43	78,72	147,26	9,58	449,59	383,83	418,03	594,87	470,50
570	463,18	78,57	139,97	9,48	452,22	383,06	416,53	604,28	471,57
571	453,04	77,73	134,41	9,28	456,03	382,79	414,88	610,54	472,09
572	446,37	79,11	129,81	9,18	458,15	382,51	413,26	618,36	472,11
573	442,68	78,12	126,70	9,07	460,08	383,45	411,59	618,08	471,65
574	443,31	78,24	124,67	8,98	461,56	383,62	410,07	619,31	470,83
575	435,79	78,42	122,69	8,78	462,94	384,53	408,65	617,47	469,78
576	423,68	77,89	120,45	8,68	463,76	385,23	407,35	608,99	468,65
577	414,03	77,50	118,77	8,58	464,22	385,84	406,03	605,01	466,97
578	404,95	77,85	117,79	8,48	463,84	386,39	404,91	595,97	465,68
579	398,45	78,47	117,22	8,37	462,41	387,10	403,86	588,83	463,70
580	390,64	78,79	116,82	8,28	460,15	387,23	402,70	579,50	461,90
581	377,50	78,92	116,09	8,18	458,00	386,42	401,47	574,90	459,97
582	352,83	79,45	115,38	8,18	454,99	385,27	400,31	560,91	457,48
583	339,69	79,34	114,82	8,08	451,34	383,57	399,20	546,48	454,56
584	330,23	80,02	114,52	7,98	447,28	381,39	398,03	526,72	451,19
585	321,84	79,79	114,45	7,88	443,04	379,06	397,03	510,92	447,42
586	314,78	80,05	114,24	7,78	438,52	376,29	395,86	495,18	443,23
587	308,18	80,34	112,89	7,77	434,04	373,50	394,79	484,14	438,75
588	302,55	79,42	111,05	7,67	429,42	370,44	393,44	469,65	434,36
589	297,30	79,87	109,43	7,59	424,70	366,72	392,37	457,40	429,77
590	293,00	79,24	107,93	7,58	420,16	363,62	391,22	446,14	425,31
591	288,71	79,38	106,63	7,48	415,52	360,56	389,93	440,68	420,89
592	285,30	79,14	105,73	7,48	411,35	357,34	388,93	429,14	416,51
593	281,32	78,68	104,67	7,38	407,09	354,12	388,03	421,35	412,34
594	281,17	78,99	103,86	7,28	402,84	351,30	386,76	413,62	408,44
595	281,40	77,73	103,15	7,28	399,05	348,32	385,64	408,40	404,70
596	288,53	78,19	102,90	7,17	395,76	345,25	384,80	407,96	401,17
597	292,33	77,85	102,54	7,07	392,15	342,46	383,52	407,52	397,96
598	295,81	78,07	102,66	6,97	389,22	340,10	382,67	407,78	395,13
599	302,03	78,49	102,52	6,88	387,61	337,51	381,77	407,89	392,57
600	307,68	78,59	102,60	6,88	385,85	335,63	380,73	412,72	390,05
601	312,60	77,63	102,83	6,78	384,90	333,64	379,82	419,53	387,98
602	316,25	78,77	102,71	6,68	384,10	331,74	378,91	425,51	386,21
603	320,56	77,52	102,78	6,57	384,07	330,27	378,02	431,35	384,77
604	324,55	77,63	102,88	6,57	383,96	329,15	377,02	438,32	383,38
605	329,39	77,27	102,99	6,37	384,67	327,84	376,29	445,35	382,28
606	332,36	77,82	103,27	6,37	385,36	327,06	375,34	452,44	381,63
607	336,32	77,47	103,30	6,27	386,32	326,56	374,52	459,79	381,15
608	340,35	77,71	103,46	6,18	387,13	326,13	373,44	461,54	380,90
609	343,10	77,60	103,51	6,08	388,43	325,70	372,97	466,37	381,05
610	347,56	77,76	103,49	5,98	389,75	325,39	372,15	468,89	381,56
611	350,22	76,71	103,89	5,88	390,92	325,22	371,54	471,88	382,33
612	353,44	77,77	103,95	5,87	392,28	325,28	370,67	475,75	383,50
613	354,97	77,38	103,97	5,77	393,74	325,31	370,24	484,17	385,15
614	357,07	76,94	103,90	5,67	394,33	325,21	369,47	489,39	386,94
615	361,16	77,05	104,27	5,57	394,89	325,53	368,96	494,25	389,24
616	367,75	77,45	104,69	5,48	395,33	326,00	368,37	496,51	391,80
617	385,66	78,16	106,53	5,38	395,74	326,98	368,00	501,67	395,25
618	394,94	78,76	108,50	5,27	395,56	327,42	367,25	509,92	400,14
619	399,17	78,34	109,59	5,17	395,30	328,01	366,83	520,66	405,70
620	397,07	78,96	110,97	5,07	395,63	329,14	365,99	524,36	411,87
621	391,06	79,08	112,11	5,07	395,60	330,23	365,37	528,97	417,62
622	387,10	79,58	112,58	4,97	394,46	330,76	364,92	529,17	422,64
623	383,98	80,30	111,94	4,87	394,55	331,36	364,33	527,43	427,05
624	380,66	79,75	111,24	4,78	393,24	332,10	363,87	526,96	430,68
625	376,77	79,83	110,25	4,78	394,05	332,22	363,32	523,82	433,83
626	373,18	79,35	108,94	4,68	393,24	332,37	362,67	521,83	436,10
627	370,10	79,29	107,81	4,57	392,62	332,15	362,21	519,70	437,82
628	369,35	79,08	106,72	4,57	391,34	331,56	361,73	516,05	438,99
629	367,20	79,02	106,00	4,57	391,59	331,64	361,02	514,21	439,85
630	357,02	78,44	105,34	4,40	391,52	331,92	360,62	511,11	440,34
631	344,94	78,55	104,25	4,37	391,58	331,59	359,87	502,93	440,19
632	338,64	78,58	103,55	4,32	391,74	331,41	359,60	495,40	439,23
633	330,78	78,45	102,33	4,27	391,63	330,83	359,20	489,79	437,95
634	321,07	77,86	101,09	4,27	392,46	330,25	358,78	480,69	435,88
635	311,19	77,82	100,22	4,17	392,44	329,56	358,54	472,17	433,32
636	301,58	77,92	98,81	4,17	391,06	328,89	358,44	460,93	431,01
637	293,70	77,88	98,57	4,08	390,95	328,24	357,78	452,51	427,36
638	288,27	77,64	98,13	4,08	390,86	327,39	356,97	442,13	423,76
639	282,93	77,47	97,41	4,08	389,75	326,34	356,47	432,89	420,09
640	278,63	77,24	96,46	3,97	388,60	325,32	356,03	424,76	416,46
641	274,57	77,21	95,92	3,97	387,26	323,84	356,49	417,18	412,65
642	271,52	77,48	96,08	3,92	384,86	322,46	356,77	409,10	409,14
643	268,54	77,04	96,10	3,87	384,15	321,79	355,49	402,32	405,93
644	266,13	76,88	95,22	3,84	382,37	320,45	354,83	396,85	402,38
645	263,60	76,94	94,65	3,77	380,63	319,10	354,76	391,78	399,54
646	261,15	76,90	94,34	3,77	378,69	317,67	355,15	387,52	396,61
647	259,22	77,30	94,47	3,67	376,71	316,55	355,01	382,57	394,31
648	257,78	77,25	94,56	3,67	373,56	315,29	354,94	377,65	391,99
649	255,68	77,62	94,20	3,57	371,28	313,87	355,49	373,03	390,10
650	253,70	77,55	94,03	3,65	369,17	312,39	355,85	370,38	388,01
651	252,10	77,24	93,70	3,57	367,55	311,02	355,85	367,03	386,37
652	250,48	77,40	93,63	3,57	365,50	309,76	355,80	363,97	384,16
653	248,98	77,27	93,35	3,47	363,57	308,34	355,98	360,49	382,27
654	247,78	77,16	93,79	3,41	362,24	307,51	355,30	359,55	380,65
655	246,67	77,65	95,46	3,38	360,96	306,72	356,18	356,44	379,18
656	245,57	78,14	96,84	3,38	360,15	305,83	356,18	356,23	377,89
657	244,78	78,52	98,36	3,27	358,91	305,43	356,45	353,91	376,01
658	244,01	78,63	99,61	3,27	357,92	304,55	356,52	352,84	374,75
659	243,75	78,96	100,49	3,26	356,92	304,10	356,73	352,03	373,49
660	242,18	79,08	99,64	3,17	355,45	303,47	356,90	348,43	371,69
661	240,48	78,93	98,26	3,07	354,16	302,29	357,04	348,59	370,22

662	238,72	78,91	97,06	3,07	352,65	301,71	357,30	346,08	368,51
663	237,15	78,29	95,70	3,07	352,91	300,77	357,44	342,47	367,22
664	235,98	78,85	94,87	3,02	350,49	300,02	357,37	339,78	365,73
665	235,07	78,38	94,37	2,97	349,57	299,39	357,44	336,97	364,07
666	233,35	77,95	94,00	2,97	348,37	298,69	357,34	335,52	362,77
667	232,21	78,20	93,63	2,97	346,60	297,84	357,51	333,30	362,03
668	231,45	77,85	93,30	2,87	345,43	297,34	357,30	330,86	360,30
669	230,72	77,93	92,64	2,87	343,37	296,57	357,44	329,69	359,36
670	229,65	77,74	92,34	2,78	342,44	295,73	357,25	328,72	358,13
671	228,02	77,64	91,90	2,77	341,09	295,15	357,24	327,01	356,60
672	226,94	78,18	91,59	2,77	339,80	294,64	357,32	324,91	355,29
673	226,50	77,65	91,43	2,67	338,65	294,18	357,15	322,15	354,05
674	225,50	77,73	91,10	2,67	337,21	293,78	357,06	320,64	353,26
675	224,89	77,36	90,88	2,64	336,74	293,38	356,55	319,05	351,92
676	224,48	77,90	90,75	2,67	334,96	292,95	356,51	317,47	351,06
677	223,41	77,83	90,66	2,57	333,94	292,60	356,16	316,13	349,91
678	223,21	77,67	90,43	2,57	332,96	292,63	355,88	314,05	348,81
679	221,77	77,70	90,30	2,47	332,10	292,16	355,87	312,93	347,86
680	222,08	77,54	90,36	2,47	330,73	291,99	355,29	311,68	347,01
681	221,33	77,42	90,39	2,47	329,58	291,86	355,22	310,72	345,41
682	220,69	77,55	90,29	2,40	328,17	291,49	355,02	310,79	344,27
683	220,08	77,40	89,60	2,37	327,46	291,08	354,45	308,22	342,98
684	219,47	77,60	89,70	2,37	326,20	290,92	353,86	308,00	341,94
685	219,01	77,42	89,72	2,27	325,74	290,91	353,53	307,70	340,84
686	218,60	77,66	89,62	2,27	324,20	290,85	353,52	306,08	340,07
687	218,15	77,38	89,38	2,27	323,40	290,80	353,36	305,42	339,13
688	217,84	77,28	89,22	2,17	322,05	290,74	352,98	304,02	338,68
689	217,56	77,28	89,09	2,17	321,32	290,88	352,67	303,10	337,23
690	217,17	77,46	89,18	2,07	320,88	290,91	351,86	302,12	336,45
691	217,18	77,29	88,80	2,07	320,62	291,23	351,31	301,22	335,37
692	216,79	76,97	88,66	2,07	319,02	291,10	351,34	300,38	334,31
693	216,23	77,58	88,39	2,07	318,58	291,33	350,84	298,76	333,37
694	215,66	76,99	88,33	2,07	318,18	291,61	350,51	297,55	332,29
695	215,61	76,97	88,28	1,97	317,17	291,91	349,85	297,07	331,18
696	215,06	77,21	88,19	2,07	315,84	292,03	349,53	295,62	330,42
697	214,50	77,12	88,12	1,97	315,51	292,37	348,78	295,05	329,46
698	213,96	77,08	87,94	1,97	315,03	292,85	348,35	294,73	328,60
699	213,15	77,16	87,83	1,97	313,58	293,13	348,13	292,82	327,52
700	212,73	77,44	87,74	1,97	313,20	293,56	347,70	292,10	326,87
701	211,88	76,90	87,55	1,94	312,65	293,68	347,36	290,83	325,80
702	211,63	76,96	87,72	1,87	312,07	294,05	346,74	290,04	324,54
703	210,78	77,31	87,53	1,87	311,30	294,78	346,34	287,89	323,57
704	209,93	76,91	87,46	1,87	310,66	294,87	345,95	288,43	323,30
705	209,47	76,76	87,62	1,87	309,92	295,30	345,33	287,92	322,23
706	208,00	76,89	87,52	1,87	309,58	295,52	345,12	286,35	320,79
707	207,32	76,83	87,09	1,87	308,95	296,08	344,33	285,03	319,45
708	206,66	76,92	87,01	1,77	307,99	296,13	344,15	284,50	318,59
709	205,45	76,88	87,04	1,77	306,70	296,05	343,90	284,58	317,34
710	205,37	76,72	86,94	1,77	306,30	296,30	343,44	283,48	316,62
711	204,42	76,75	86,89	1,77	306,11	296,32	342,78	281,75	315,26
712	203,80	77,29	86,78	1,77	304,77	296,33	342,24	280,94	314,18
713	203,24	76,65	86,51	1,77	303,87	296,64	342,10	280,00	313,06
714	202,65	76,63	86,54	1,77	303,53	296,81	341,25	278,95	311,88
715	202,27	76,71	86,41	1,77	302,80	297,10	341,16	278,17	311,15
716	201,75	76,73	86,47	1,67	301,95	297,48	340,86	277,65	309,99
717	201,60	76,67	86,64	1,67	301,21	298,03	340,46	277,27	309,23
718	201,63	76,51	86,44	1,67	301,97	298,29	339,78	276,21	308,35
719	201,77	76,48	86,53	1,67	300,90	299,07	339,56	276,14	307,34
720	201,86	76,51	86,38	1,67	299,58	299,35	339,01	275,67	306,54
721	201,74	76,34	86,23	1,67	300,19	299,70	338,33	275,55	305,71
722	201,34	76,37	86,51	1,67	299,99	300,27	338,00	275,49	304,88
723	201,51	76,35	86,38	1,57	298,92	300,66	337,72	274,56	304,40
724	200,97	76,61	86,30	1,57	298,87	301,39	337,20	274,47	303,47
725	200,47	76,56	86,08	1,57	298,42	301,73	336,10	273,34	302,80
726	200,37	76,51	86,07	1,57	297,41	302,20	336,19	272,96	302,26
727	200,55	76,40	86,13	1,57	296,75	302,86	335,92	273,00	301,73
728	200,37	76,44	85,94	1,57	296,79	303,09	335,47	273,49	301,21
729	199,93	76,46	85,98	1,49	297,02	303,67	334,55	272,37	300,70
730	200,18	76,33	86,01	1,47	296,91	304,46	334,37	272,71	300,23
731	200,11	76,48	85,88	1,47	296,50	305,09	334,19	272,26	299,76
732	205,55	76,86	89,81	1,47	295,79	305,85	333,69	271,47	299,62
733	204,24	76,97	87,43	1,47	296,30	306,74	333,58	271,05	299,31
734	203,35	76,81	86,89	1,42	294,77	307,12	333,56	270,78	299,12
735	202,98	76,56	86,68	1,37	295,51	308,13	333,20	271,49	298,77
736	202,85	76,79	86,59	1,37	295,25	308,85	332,63	271,85	298,62
737	202,80	76,48	86,46	1,37	295,15	309,67	332,29	271,68	298,39
738	202,82	76,54	86,32	1,37	295,07	310,82	332,26	271,19	298,25
739	202,71	76,52	86,19	1,27	295,13	311,78	331,38	271,23	297,92
740	202,27	76,35	86,13	1,37	294,75	312,51	331,31	271,19	297,69
741	201,48	76,29	86,09	1,27	294,95	313,45	330,78	271,11	297,40
742	201,62	76,52	86,00	1,27	293,77	313,94	331,19	269,95	297,20
743	200,80	76,36	85,97	1,27	294,20	314,83	331,09	269,90	296,98
744	200,42	76,42	85,90	1,27	293,60	315,61	331,00	269,97	296,66
745	200,22	76,42	85,90	1,27	293,48	316,53	331,17	268,67	296,47
746	199,55	76,83	85,90	1,27	294,02	317,24	330,79	268,09	296,14
747	199,60	76,20	85,73	1,17	293,74	318,22	329,83	268,36	295,93
748	199,16	76,51	85,87	1,26	293,54	319,09	329,74	267,81	295,59
749	199,19	76,02	85,78	1,17	293,09	320,28	329,14	267,42	295,18
750	198,63	76,35	85,58	1,17	293,24	321,13	329,08	266,98	294,79
751	198,31	76,14	85,46	1,17	292,70	322,14	329,41	266,18	294,39
752	198,52	76,23	85,50	1,17	292,74	323,01	329,28	265,67	293,95
753	198,31	76,08	85,44	1,17	292,51	323,76	329,13	265,47	293,62
754	198,08	76,37	85,52	1,07	291,74	324,39	328,37	264,84	293,12
755	198,10	76,17	85,56	1,12	291,81	325,01	327,88	263,85	292,72
756	197,85	76,47	85,67	1,07	291,96	325,80	327,55	264,49	292,42

757	197,74	76,07	85,74	1,07	291,65	326,61	327,91	263,83	292,07
758	198,10	76,07	85,48	1,07	290,88	327,16	327,50	263,52	291,65
759	197,61	75,83	85,54	1,07	291,13	328,15	327,54	263,20	291,23
760	197,63	76,15	85,52	1,07	290,98	328,88	326,64	262,98	290,92
761	197,29	76,42	85,64	1,07	290,81	329,41	326,29	262,50	290,52
762	196,95	76,06	85,44	0,97	290,83	330,36	326,34	262,37	290,19
763	196,61	76,27	85,31	0,97	289,48	331,22	326,21	260,95	289,90
764	196,49	76,24	85,42	0,97	290,28	331,91	326,20	261,35	289,49
765	195,92	76,19	85,36	0,97	290,28	332,98	325,58	260,69	289,13
766	195,44	76,07	85,40	0,87	290,13	334,04	325,14	260,76	288,71
767	195,28	76,23	85,36	0,87	289,54	334,88	325,31	260,33	288,44
768	195,39	76,08	85,40	0,87	289,56	336,15	324,97	259,61	288,12
769	195,44	75,92	85,31	0,87	289,36	336,95	324,33	259,28	287,74
770	195,14	75,88	85,21	0,87	289,39	337,73	324,07	259,80	287,35
771	194,93	76,11	85,14	0,87	289,09	338,67	323,63	259,17	287,14
772	195,06	76,07	85,26	0,87	288,51	339,33	322,85	258,59	286,76
773	194,73	75,96	85,08	0,87	288,61	340,06	322,88	258,13	286,55
774	194,10	74,94	84,95	0,87	287,60	340,71	322,45	257,22	286,17
775	194,69	73,41	84,95	0,87	286,68	341,45	322,59	256,51	286,00
776	194,62	73,15	84,87	0,77	286,75	342,50	322,36	256,26	285,60
777	194,22	74,46	84,69	0,77	286,29	342,85	322,13	256,64	285,23
778	194,01	74,81	84,68	0,77	286,32	343,66	321,07	256,48	284,90
779	193,76	75,09	84,50	0,77	285,89	344,96	321,44	256,00	284,55
780	193,93	75,16	84,56	0,68	286,19	345,74	320,42	256,52	284,38
781	193,84	75,09	84,63	0,77	285,99	346,60	320,51	256,44	284,19
782	193,55	75,40	84,58	0,67	285,89	347,75	319,91	256,31	283,84
783	193,28	75,39	84,63	0,67	285,74	348,58	319,33	256,22	283,74
784	193,60	75,00	84,62	0,67	285,24	349,15	318,73	256,31	283,48
785	193,36	74,94	84,60	0,67	285,23	350,30	318,60	256,10	283,35
786	193,45	74,99	84,71	0,67	284,83	351,21	318,28	256,09	283,03
787	193,41	75,18	84,53	0,67	284,75	351,92	318,38	256,01	282,83
788	193,84	75,57	84,67	0,57	283,85	352,44	318,43	255,84	282,81
789	193,60	75,33	84,54	0,57	283,68	352,91	318,45	255,57	282,60
790	193,17	75,83	84,78	0,57	283,27	353,52	318,19	255,99	282,61
791	193,61	75,80	84,64	0,57	284,06	354,51	317,39	256,15	282,66
792	193,44	75,45	84,52	0,57	283,68	354,89	317,70	256,14	282,52
793	193,56	75,88	84,68	0,57	282,27	355,15	317,45	255,62	282,53
794	193,47	75,84	84,66	0,57	281,53	355,25	317,62	255,05	282,54
795	193,31	75,79	84,67	0,57	282,39	355,71	317,55	256,01	282,55
796	193,27	75,93	84,67	0,47	281,64	355,84	317,43	256,34	282,67
797	193,08	75,57	84,63	0,47	281,92	356,28	316,67	256,12	282,71
798	193,44	75,97	84,59	0,47	281,51	356,29	316,91	256,61	282,72
799	193,08	75,02	84,56	0,47	279,70	355,99	317,03	255,24	282,88
800	193,16	72,89	84,19	0,47	278,40	355,58	316,96	255,06	283,12
801	193,52	70,16	83,81	0,37	277,98	354,92	316,64	255,17	282,87
802	193,77	69,05	83,66	0,40	276,94	354,69	316,47	254,56	283,17
803	193,74	68,68	83,21	0,37	276,40	354,16	316,19	253,45	283,52
804	193,10	69,82	83,45	0,37	275,89	354,37	315,74	254,70	283,19
805	193,09	70,36	83,26	0,37	275,44	354,57	315,67	253,79	283,30
806	193,12	71,72	83,16	0,37	274,93	354,41	315,03	253,45	283,33
807	193,06	72,41	83,22	0,37	275,14	354,67	315,21	253,81	283,04
808	192,93	73,16	83,31	0,37	274,77	354,87	315,07	253,94	283,08
809	193,27	73,44	83,28	0,37	274,47	355,05	314,82	253,89	283,19
810	193,60	73,77	83,87	0,27	274,08	355,36	314,66	253,96	283,42
811	192,97	74,10	85,14	0,27	273,28	355,56	314,51	254,89	283,58
812	192,85	74,67	87,13	0,27	273,13	355,65	314,48	253,90	283,98
813	192,42	75,01	87,72	0,27	272,51	355,51	314,39	253,31	284,11
814	192,80	74,92	87,24	0,27	272,63	355,43	314,13	253,25	283,94
815	193,13	75,12	86,98	0,27	272,24	355,80	313,86	253,86	283,94
816	193,48	75,21	86,71	0,17	272,11	355,81	313,70	253,61	283,96
817	193,70	75,15	86,42	0,17	272,02	355,77	313,84	253,48	284,02
818	193,63	75,51	86,20	0,17	271,48	355,93	313,80	253,77	284,17
819	193,75	75,45	86,04	0,17	270,70	355,98	313,72	253,67	284,27
820	193,58	75,39	85,88	0,17	270,11	356,37	313,59	253,55	284,34
821	193,94	75,15	85,79	0,17	270,34	356,88	313,17	254,12	284,62
822	194,13	75,37	85,45	0,17	269,61	356,88	313,26	253,87	284,68
823	194,32	75,45	85,46	0,17	269,37	357,39	312,78	254,48	284,80
824	194,35	75,18	85,29	0,17	268,37	357,55	313,25	253,65	284,95
825	194,22	75,19	85,16	0,07	268,35	357,83	312,61	253,95	285,12
826	194,28	75,50	85,12	0,07	267,97	358,67	312,05	253,42	285,10
827	193,98	75,34	85,05	0,07	266,79	358,76	312,74	253,33	285,09
828	194,32	75,34	84,93	0,07	266,91	359,06	312,42	253,27	285,25
829	194,16	75,39	84,88	0,07	265,82	359,38	312,19	252,94	285,28
830	193,90	75,19	84,75	0,07	264,88	359,21	312,40	254,31	285,44
831	193,71	75,25	84,79	0,05	265,49	359,96	312,12	253,13	285,54
832	193,83	75,13	84,66	0,06	265,05	360,65	311,87	252,81	285,68
833	193,59	75,16	84,51	0,07	264,90	361,15	311,95	252,50	285,65
834	193,36	75,40	84,43	0,04	264,61	361,34	311,64	252,40	285,66
835	193,28	74,88	84,57	0,04	264,01	361,72	310,99	252,59	285,67
836	71,05	70,63	74,53	6,76	69,92	69,25	69,41	70,58	69,55
837	108,85	71,02	80,02	6,76	69,92	69,21	69,36	73,55	69,62
838	283,52	71,08	97,84	6,51	71,42	69,57	69,27	96,59	71,09
839	439,81	71,08	110,27	6,26	74,64	71,56	69,20	153,30	74,86
840	546,58	70,99	128,05	5,96	80,68	76,19	69,22	235,54	81,90
841	595,52	71,19	143,00	5,66	89,18	83,08	69,20	331,81	92,02
842	620,51	71,57	150,24	5,36	99,69	91,64	69,32	400,69	104,40
843	640,66	71,48	158,16	5,06	115,65	101,30	69,45	467,02	119,22
844	657,72	71,97	165,22	4,76	133,70	111,93	69,64	527,21	135,06
845	667,85	72,18	170,22	4,46	151,61	122,67	69,99	573,93	154,96
846	686,69	72,13	175,73	4,16	169,66	133,52	70,61	618,45	174,02
847	692,76	72,56	178,30	3,86	188,27	144,68	71,49	653,81	194,06
848	683,37	73,01	178,34	3,61	207,76	155,94	72,66	677,87	213,96
849	665,26	73,04	176,40	3,36	227,09	167,74	74,36	691,34	233,16
850	653,24	73,17	172,74	3,16	246,40	179,77	76,50	697,02	251,35
851	739,28	73,40	244,23	5,97	265,20	192,15	79,14	699,41	268,94

852	592,49	73,88	261,72	17,62	283,12	203,94	82,32	667,95	284,78
853	679,17	73,47	233,76	17,32	299,01	215,44	86,38	650,45	297,20
854	641,97	73,20	204,47	17,07	313,19	225,95	91,09	643,66	307,39
855	658,10	72,53	195,53	16,77	325,67	235,10	96,22	648,31	315,77
856	686,41	71,41	193,11	16,52	336,99	243,05	101,52	661,49	322,72
857	725,24	70,36	196,85	16,17	347,79	250,21	106,86	686,09	330,33
858	720,86	70,33	196,13	15,92	358,20	256,44	112,12	702,43	338,46
859	727,54	69,85	196,07	15,62	370,19	261,95	117,10	718,03	345,97
860	717,65	70,93	195,28	15,32	380,63	267,79	121,96	726,77	354,51
861	704,43	70,44	193,74	15,07	391,28	272,79	126,53	732,50	362,80
862	707,78	70,50	193,05	14,77	401,83	277,60	130,78	736,10	370,79
863	730,64	70,86	196,31	14,47	410,63	282,36	134,79	745,85	378,78
864	734,64	70,96	197,95	14,17	418,56	287,04	138,66	754,25	387,32
865	736,97	71,12	198,59	13,87	425,86	291,88	142,45	762,23	396,16
866	739,11	72,03	199,29	13,57	431,16	297,03	146,18	769,54	405,25
867	733,34	72,66	198,93	13,27	439,32	301,52	149,75	775,08	413,21
868	724,44	73,23	197,30	13,02	444,27	306,79	153,31	776,47	422,41
869	720,50	73,58	196,42	12,77	450,65	311,63	156,83	775,67	429,67
870	715,19	73,77	194,66	12,47	455,80	316,69	160,24	771,01	436,89
871	715,37	73,85	195,14	12,22	459,46	321,79	163,58	767,20	444,35
872	715,65	73,92	194,91	11,97	465,12	326,28	166,80	768,02	450,44
873	715,39	74,23	194,13	11,66	467,57	331,35	169,96	765,73	457,51
874	716,13	74,42	194,00	11,41	472,01	336,45	173,01	766,23	464,34
875	714,00	74,51	193,17	11,17	475,61	341,17	176,10	765,28	470,40
876	714,04	74,52	193,10	10,91	477,60	346,08	179,09	765,05	477,22
877	712,35	74,82	192,32	10,66	481,20	350,74	181,89	764,43	483,13
878	713,92	74,76	192,85	10,41	483,15	355,60	184,82	762,23	489,77
879	713,52	74,75	192,16	10,16	485,83	360,04	187,74	762,63	495,45
880	714,80	74,97	192,07	9,91	486,72	364,61	190,75	760,56	501,07
881	716,23	75,32	192,49	9,66	489,70	368,96	193,54	761,43	506,79
882	713,72	74,92	191,62	9,41	491,94	373,23	196,30	760,69	511,61
883	710,64	75,38	190,82	9,16	493,67	377,54	199,24	758,67	516,75
884	709,26	75,36	190,43	8,96	495,42	381,44	202,87	756,04	521,57
885	706,24	75,42	189,26	8,71	496,30	385,49	207,05	751,93	525,95
886	705,91	75,25	189,35	8,46	498,76	389,30	211,32	751,32	529,95
887	702,59	75,34	188,49	8,26	498,91	393,21	215,37	750,92	534,35
888	702,83	75,14	188,25	8,01	500,27	396,90	219,58	749,95	538,29
889	699,93	75,30	186,91	7,81	500,75	400,41	224,25	747,80	542,25
890	699,28	75,31	186,39	7,61	501,86	404,01	229,02	745,32	545,93
891	697,45	75,70	185,91	7,36	502,79	407,40	233,87	741,99	549,25
892	693,79	75,39	185,02	7,16	504,06	410,47	238,66	740,98	552,60
893	690,31	75,57	184,38	6,96	504,19	413,77	243,50	737,00	556,22
894	688,59	75,67	183,49	6,76	505,49	416,67	248,54	734,20	559,00
895	689,09	76,17	183,08	6,56	505,25	419,99	253,82	732,72	562,34
896	690,09	76,18	183,34	6,36	506,49	423,15	259,17	729,57	565,73
897	690,16	75,91	182,83	6,16	509,02	425,79	264,46	732,47	568,67
898	690,42	75,93	182,20	5,96	509,71	428,92	269,85	733,80	571,96
899	686,36	76,28	181,07	5,76	509,81	432,25	275,32	732,82	575,33
900	681,29	76,31	179,94	5,61	510,50	435,17	280,82	732,51	578,41
901	677,47	76,32	178,72	5,41	510,87	438,28	286,35	730,98	581,59
902	672,54	76,69	177,24	5,26	511,35	441,00	292,04	727,60	584,44
903	668,91	75,99	176,08	5,06	512,11	443,65	297,66	721,98	587,24
904	663,38	76,03	174,96	4,91	512,46	446,40	303,37	718,73	590,04
905	656,92	76,43	173,32	4,76	512,29	449,06	308,97	715,07	592,66
906	654,88	76,38	172,31	4,61	513,06	451,04	314,48	710,97	594,82
907	655,39	76,54	171,41	4,46	512,20	454,26	320,37	708,74	597,65
908	652,21	76,54	170,67	4,31	512,42	456,70	326,04	707,08	600,32
909	638,90	76,50	168,52	4,21	512,99	459,11	331,84	704,28	602,61
910	621,52	76,33	165,44	4,11	512,31	462,25	337,47	696,74	604,62
911	608,94	76,47	163,33	4,01	512,33	464,97	343,20	689,43	605,52
912	601,38	76,51	161,33	3,91	512,37	467,72	348,86	679,71	605,04
913	594,86	76,72	159,09	3,81	511,74	470,39	354,53	670,88	604,24
914	589,18	76,41	158,24	3,71	511,28	472,79	360,20	660,23	602,33
915	585,37	76,26	156,75	3,66	511,54	474,84	365,73	652,82	599,86
916	582,32	75,54	155,36	3,56	512,71	476,29	370,96	645,65	596,38
917	576,83	75,55	153,81	3,46	510,56	478,48	376,57	637,64	594,42
918	572,18	75,86	152,46	3,41	508,94	480,25	382,24	627,84	591,50
919	565,59	76,11	151,14	3,36	509,50	481,17	387,30	620,71	588,03
920	558,62	76,25	149,73	3,26	507,51	482,86	392,77	611,94	585,80
921	554,31	75,98	148,58	3,21	506,10	483,82	398,12	602,88	583,08
922	548,11	75,96	147,49	3,16	505,28	484,52	403,27	593,64	578,96
923	539,10	75,98	145,94	3,11	503,47	485,32	408,69	586,52	576,38
924	457,98	76,23	185,52	17,57	502,66	486,21	414,66	569,83	573,11
925	367,58	76,24	210,10	17,57	501,25	485,58	422,05	532,25	569,54
926	450,96	75,80	163,99	16,27	496,51	484,98	428,45	521,94	563,97
927	536,09	75,73	161,66	16,07	490,96	483,49	434,03	536,07	557,07
928	575,86	74,66	163,01	15,82	486,47	480,24	438,23	559,78	548,55
929	631,97	75,00	168,68	15,57	477,77	476,87	442,64	583,82	541,91
930	676,17	75,11	176,07	15,27	472,10	472,68	446,33	612,21	534,94
931	709,00	75,45	183,35	14,97	466,08	468,67	449,86	644,51	529,26
932	735,92	75,76	189,81	14,67	462,79	463,93	452,49	679,40	524,31
933	761,40	76,04	196,01	14,37	461,19	459,75	454,70	710,30	519,99
934	776,48	76,36	200,51	14,02	460,50	455,93	456,43	737,82	516,77
935	784,90	76,38	205,12	13,72	462,41	452,82	457,62	760,38	514,42
936	785,40	76,47	208,38	13,37	463,79	450,09	458,25	779,13	513,04
937	744,63	76,80	198,59	13,07	465,96	448,39	458,74	788,04	511,91
938	701,72	76,63	185,23	12,77	468,69	446,64	458,66	789,73	511,95
939	618,34	76,88	164,75	12,62	471,15	445,94	458,58	779,12	511,90
940	564,30	76,75	151,12	12,42	472,86	445,20	458,07	766,59	512,65
941	529,85	76,65	142,17	12,22	472,70	444,68	457,00	745,39	512,77
942	503,36	76,45	135,67	12,07	472,10	444,00	455,96	728,25	512,27
943	483,63	76,49	130,83	11,97	470,89	443,63	454,83	709,97	510,92
944	470,01	76,13	127,29	11,82	469,09	442,82	453,43	692,28	508,63
945	460,73	76,31	124,61	11,66	466,36	441,97	451,81	674,47	505,13
946	452,87	76,17	122,41	11,52	462,37	440,93	450,24	661,40	502,19

947	445,92	75,98	120,64	11,41	458,10	439,37	448,35	649,46	498,16
948	441,65	76,17	119,26	11,27	453,51	438,24	446,26	639,96	494,67
949	439,85	76,00	118,30	11,11	449,27	436,75	444,31	630,75	489,95
950	439,89	75,97	117,98	10,96	445,13	435,11	442,00	627,39	485,53
951	439,82	76,05	117,24	10,81	440,85	433,46	439,89	623,72	482,24
952	441,22	75,97	116,68	10,71	437,09	431,97	437,66	623,31	478,85
953	445,34	76,06	116,38	10,51	433,94	430,47	435,32	624,49	476,06
954	448,17	75,27	116,35	10,36	431,77	428,76	432,60	627,77	473,56
955	450,62	75,03	116,04	10,21	427,99	428,12	429,99	631,40	472,17
956	453,60	75,30	116,01	10,02	426,29	426,91	427,48	636,68	470,97
957	455,22	75,45	116,00	9,86	423,49	426,42	425,08	641,40	470,67
958	456,82	75,75	115,79	9,71	422,73	426,04	422,53	646,09	470,75
959	458,49	75,72	115,73	9,56	422,00	425,61	419,89	651,17	470,91
960	457,11	75,85	115,66	9,36	422,38	425,55	417,41	653,87	471,89
961	462,55	76,12	115,59	9,21	422,39	425,63	414,74	660,27	473,30
962	465,03	75,83	115,31	9,06	422,58	425,47	412,13	664,72	474,81
963	463,85	76,00	114,86	8,91	422,56	426,04	409,44	668,32	476,03
964	462,55	76,11	114,53	8,71	423,11	425,95	406,82	668,28	477,63
965	462,96	75,85	114,80	8,61	422,95	426,30	404,37	667,56	478,92
966	463,78	75,74	114,45	8,46	421,88	426,83	401,79	665,08	480,66
967	463,72	75,96	114,08	8,31	421,39	427,40	399,30	666,14	481,86
968	462,62	76,29	113,80	8,16	419,99	428,27	396,88	664,60	483,46
969	462,30	75,95	113,89	8,01	419,64	429,00	394,50	663,22	484,66
970	461,41	75,90	113,77	7,86	418,82	429,86	392,10	662,05	486,07
971	460,33	76,19	113,81	7,66	418,60	430,75	389,89	662,34	486,99
972	460,20	76,41	113,78	7,56	417,97	431,67	387,65	662,39	488,52
973	460,47	76,27	113,55	7,41	418,31	432,69	385,34	662,69	489,16
974	460,28	76,48	113,60	7,26	417,38	433,69	383,25	661,11	490,65
975	460,98	76,35	113,59	7,11	417,33	434,85	381,25	662,99	492,18
976	461,31	76,37	113,65	6,96	417,54	435,65	379,32	664,63	493,08
977	459,79	76,51	113,32	6,81	417,66	436,46	377,30	665,46	494,63
978	459,44	76,53	113,06	6,71	417,38	437,62	375,35	667,77	496,15
979	459,41	76,90	113,24	6,56	416,78	438,75	373,78	665,80	497,71
980	460,03	76,52	112,98	6,41	417,54	439,20	371,97	668,04	498,88
981	462,08	76,63	113,22	6,26	417,58	440,01	370,35	667,22	500,56
982	463,68	76,41	113,05	6,11	417,55	441,16	368,72	672,44	502,08
983	464,57	76,42	113,15	5,96	418,13	441,70	367,17	675,51	503,55
984	462,81	76,46	112,86	5,81	418,57	442,73	365,64	676,48	505,44
985	461,18	76,50	112,55	5,71	418,49	443,31	364,24	675,07	506,94
986	457,89	76,56	111,88	5,56	418,23	444,29	362,89	674,79	508,36
987	456,02	76,66	111,83	5,46	419,07	444,74	361,52	671,38	509,62
988	453,44	76,36	111,45	5,36	418,97	445,52	360,33	668,71	510,91
989	451,62	76,47	111,26	5,21	418,53	446,32	359,18	666,21	512,01
990	450,85	76,52	111,11	5,11	418,89	447,23	358,00	664,16	513,00
991	449,78	76,41	111,03	4,96	419,17	448,31	356,96	663,53	513,63
992	448,18	76,55	110,90	4,86	419,42	449,28	355,78	662,82	514,42
993	447,17	76,37	110,40	4,76	420,06	450,25	354,77	662,42	515,02
994	446,24	76,36	110,32	4,61	421,29	451,05	353,77	661,54	514,96
995	444,57	76,57	110,15	4,51	421,30	452,27	352,98	662,33	515,24
996	443,77	76,59	109,81	4,41	422,00	453,04	352,25	662,23	515,83
997	437,34	76,80	109,29	4,31	422,80	453,96	351,42	660,50	516,04
998	430,30	76,32	108,62	4,21	423,32	455,14	350,61	656,93	516,67
999	422,38	76,38	107,99	4,11	424,20	455,96	349,94	651,47	516,24
1000	414,26	76,44	107,14	4,06	424,54	456,99	349,23	644,07	515,73
1001	404,86	76,56	106,36	3,96	424,97	457,43	348,82	635,39	514,73
1002	394,92	76,51	105,22	3,91	425,28	457,79	348,16	628,80	512,83
1003	385,13	76,37	104,24	3,86	425,86	458,00	347,75	618,85	510,14
1004	377,21	76,39	103,54	3,81	425,13	458,51	347,40	609,00	506,98
1005	369,74	76,44	102,71	3,76	424,51	458,84	347,00	599,20	503,70
1006	364,68	76,37	102,28	3,71	424,24	458,85	346,64	587,91	499,29
1007	357,79	76,49	101,41	3,66	423,48	458,42	346,22	577,14	495,20
1008	353,07	76,39	100,95	3,61	423,14	457,79	345,81	564,81	490,96
1009	347,62	76,43	100,35	3,56	422,68	456,76	345,64	554,11	486,40
1010	341,19	76,23	99,54	3,56	422,05	455,40	345,23	544,53	482,03
1011	334,14	76,26	98,90	3,51	422,29	453,44	344,90	533,95	477,97
1012	326,61	76,27	98,45	3,46	421,23	451,60	344,50	523,71	473,38
1013	321,30	76,20	97,88	3,46	420,87	449,65	344,25	512,73	469,00
1014	316,83	76,48	97,28	3,41	419,85	447,56	344,00	502,81	464,49
1015	313,38	76,52	97,14	3,36	420,63	444,74	343,69	493,70	459,52
1016	309,70	76,57	96,86	3,36	419,67	442,37	343,39	484,52	455,50
1017	307,81	76,55	96,30	3,31	419,04	439,65	343,25	477,28	451,34
1018	305,37	76,57	96,13	3,26	418,33	437,14	343,17	471,91	447,59
1019	303,85	76,21	96,30	3,21	417,88	434,39	342,98	467,60	443,49
1020	299,87	76,10	95,60	3,21	416,87	431,76	342,94	462,03	439,85
1021	292,65	76,15	94,83	3,21	416,05	429,28	343,06	454,46	436,51
1022	286,35	76,16	94,44	3,16	413,98	426,73	343,14	447,71	433,37
1023	282,12	76,34	93,94	3,16	412,29	424,40	343,14	439,53	430,35
1024	278,86	76,03	93,56	3,11	410,06	421,90	343,29	432,01	426,70
1025	275,14	76,25	93,16	3,11	407,61	419,22	343,67	425,01	423,45
1026	270,88	76,26	92,86	3,11	405,35	416,85	343,89	416,94	420,36
1027	267,87	76,18	92,43	3,06	402,84	414,01	344,31	411,27	417,26
1028	264,50	76,14	92,18	3,06	400,13	411,30	344,53	404,71	414,22
1029	261,91	76,23	91,80	3,06	396,99	408,72	344,72	398,74	411,25
1030	259,36	76,11	91,40	3,01	394,68	406,25	345,09	394,49	408,44
1031	256,75	76,10	91,25	3,01	391,65	403,63	345,30	389,42	405,51
1032	254,18	76,05	90,85	2,96	389,44	401,11	345,78	385,15	402,71
1033	251,32	76,12	90,60	2,96	386,58	398,86	346,01	380,50	400,25
1034	249,25	76,26	90,51	2,96	384,24	396,65	346,64	375,66	397,82
1035	247,21	76,16	90,09	2,96	381,71	394,60	346,96	371,70	395,58
1036	245,42	76,30	89,77	2,91	379,65	392,22	347,40	368,16	393,11
1037	243,75	76,08	89,91	2,91	376,86	390,14	347,77	364,20	391,06
1038	242,15	75,99	89,61	2,91	374,98	388,28	348,13	360,58	389,00
1039	240,31	76,10	89,30	2,86	372,46	386,32	348,45	357,67	387,00
1040	238,88	76,09	89,24	2,86	370,55	384,58	348,83	355,12	385,16
1041	237,55	75,96	88,91	2,86	368,24	382,73	349,25	352,48	383,04

1042	236,54	76,06	88,93	2,81	366,64	380,88	349,57	349,93	381,16
1043	234,92	76,05	88,86	2,81	364,72	379,27	349,89	347,71	379,51
1044	234,12	76,09	88,54	2,81	363,12	377,77	350,18	345,34	377,85
1045	233,62	76,06	88,49	2,81	361,56	376,61	350,49	342,80	375,88
1046	232,83	76,09	88,36	2,76	359,96	375,24	350,79	341,66	374,25
1047	231,76	76,06	88,09	2,76	358,31	373,69	351,01	339,53	372,52
1048	230,60	76,01	87,94	2,76	356,37	372,70	351,28	337,49	371,49
1049	229,89	75,92	88,00	2,71	355,58	371,39	351,52	336,73	369,66
1050	229,35	76,01	87,85	2,71	354,21	370,43	351,87	334,38	368,46
1051	228,72	76,08	87,61	2,71	352,85	369,51	352,11	333,20	367,14
1052	227,64	76,03	87,61	2,66	351,24	368,75	352,44	331,86	366,19
1053	226,98	76,09	87,67	2,66	350,23	367,87	352,78	330,38	364,99
1054	226,81	75,94	87,76	2,66	349,42	367,06	352,92	329,55	363,47
1055	226,49	76,06	87,47	2,61	348,15	366,23	353,30	328,67	362,69
1056	225,59	76,05	87,23	2,61	346,95	365,66	353,67	327,99	361,57
1057	225,68	76,11	86,80	2,61	346,28	364,76	353,87	327,02	360,32
1058	225,56	76,04	87,31	2,56	345,47	364,51	354,19	325,62	359,43
1059	225,14	76,10	87,32	2,56	344,55	364,04	354,51	325,25	358,41
1060	225,30	75,94	87,26	2,56	343,79	363,56	354,86	325,25	357,38
1061	225,28	75,86	87,42	2,51	343,40	363,35	355,29	324,56	356,64
1062	224,80	75,97	87,22	2,51	342,32	362,90	355,46	323,69	355,91
1063	224,63	76,00	87,13	2,51	342,28	362,63	355,95	323,03	354,68
1064	225,38	76,01	87,06	2,46	341,99	362,50	356,30	323,37	353,88
1065	224,44	76,00	86,93	2,46	341,09	362,81	356,87	322,64	353,66
1066	224,90	76,04	86,84	2,46	340,60	363,00	356,92	322,26	353,06
1067	224,34	76,02	86,86	2,41	340,35	363,04	357,59	321,95	352,17
1068	224,97	76,00	87,04	2,41	339,77	363,12	358,16	321,54	351,73
1069	225,99	75,87	86,94	2,41	339,35	363,30	358,53	321,52	351,31
1070	227,09	76,00	86,74	2,36	338,93	363,60	359,09	321,60	351,02
1071	227,65	76,05	87,30	2,36	338,43	363,66	359,57	322,81	350,49
1072	228,52	76,04	87,34	2,36	337,85	364,32	359,98	324,13	350,44
1073	229,36	76,08	87,11	2,31	337,11	364,84	360,40	324,46	350,39
1074	231,16	76,13	87,20	2,31	336,56	365,28	361,08	325,22	350,19
1075	232,19	76,05	87,13	2,26	336,56	365,94	361,63	326,61	349,95
1076	232,46	76,05	87,15	2,26	335,94	366,85	362,20	327,34	350,23
1077	232,82	76,14	86,95	2,26	335,36	367,68	362,62	328,72	350,31
1078	232,69	76,19	86,76	2,21	335,20	368,40	363,25	329,17	350,43
1079	232,68	76,16	86,89	2,21	334,83	368,88	363,68	330,66	350,33
1080	233,05	76,06	87,26	2,21	334,78	370,04	364,27	331,51	350,56
1081	232,91	76,27	86,82	2,16	334,18	370,99	364,76	331,26	350,98
1082	233,11	76,45	86,77	2,16	333,97	371,80	365,36	332,18	351,07
1083	233,34	76,14	87,27	2,16	334,39	372,61	365,81	333,08	350,86
1084	233,70	76,18	86,90	2,11	333,81	373,59	366,28	333,16	351,25
1085	233,38	76,10	86,97	2,11	333,97	374,51	366,91	333,92	351,21
1086	233,71	76,06	87,08	2,11	333,59	375,54	367,44	334,22	351,62
1087	233,81	76,10	87,13	2,06	333,54	376,35	367,83	334,89	351,84
1088	233,76	76,11	87,21	2,06	333,15	377,31	368,45	335,22	352,16
1089	234,35	76,13	87,26	2,06	333,89	378,32	368,77	335,88	351,87
1090	233,97	76,10	87,10	2,01	333,38	379,32	369,43	335,71	352,33
1091	233,87	76,20	87,19	2,01	333,54	380,10	369,81	336,13	352,54
1092	234,01	76,15	87,10	2,00	333,59	381,03	370,40	335,89	352,88
1093	233,82	76,16	87,30	1,96	333,40	381,60	370,68	336,20	352,65
1094	233,77	76,33	87,17	1,96	332,97	382,73	371,19	335,13	353,30
1095	233,60	76,13	87,12	1,91	332,96	383,53	371,76	336,15	353,25
1096	233,61	76,21	86,95	1,91	333,14	384,50	372,04	336,08	353,08
1097	233,14	76,21	87,26	1,91	333,19	385,25	372,47	335,89	353,28
1098	232,79	76,21	86,78	1,86	332,91	385,81	372,84	335,35	353,43
1099	232,83	76,25	86,87	1,86	332,96	386,34	373,24	335,68	353,26
1100	232,89	76,31	87,03	1,86	332,65	387,01	373,72	336,01	353,24
1101	232,61	76,21	86,84	1,81	333,27	387,48	374,01	335,29	352,90
1102	232,29	76,15	86,98	1,81	333,11	387,78	374,16	335,55	353,00
1103	232,58	75,03	87,10	1,81	333,64	387,97	374,32	337,16	352,79
1104	232,99	74,73	86,49	1,76	332,99	388,39	374,64	335,24	352,89
1105	232,37	75,06	86,84	1,76	332,76	388,66	374,85	335,51	352,87
1106	232,23	75,31	86,92	1,76	332,92	388,80	375,23	335,04	352,89
1107	232,53	75,45	86,86	1,71	332,58	389,00	375,58	334,01	352,99
1108	231,87	75,57	86,82	1,71	332,79	389,11	375,85	334,26	352,86
1109	232,06	75,66	86,96	1,71	332,22	389,61	376,24	333,36	353,25
1110	232,08	75,69	86,79	1,66	332,37	390,01	376,66	333,63	353,14
1111	231,96	75,90	86,81	1,66	332,55	390,32	376,85	333,80	352,90
1112	231,64	75,77	86,77	1,61	332,58	390,56	377,17	332,19	353,10
1113	231,33	75,78	86,82	1,61	332,69	391,05	377,57	333,00	353,03
1114	231,82	75,95	86,65	1,61	332,82	391,20	377,77	333,20	352,79
1115	232,10	75,90	86,83	1,56	332,48	391,58	378,18	332,37	353,23
1116	231,87	75,94	86,67	1,56	332,44	392,18	378,48	332,09	353,30
1117	231,47	75,88	86,71	1,56	332,77	392,20	378,68	331,61	352,97
1118	230,86	75,94	86,54	1,51	332,57	392,62	378,81	331,52	353,22
1119	230,47	75,98	86,97	1,51	332,74	392,67	379,10	331,64	353,08
1120	230,62	75,90	86,87	1,51	332,85	392,78	379,26	330,68	353,18
1121	230,09	75,93	86,95	1,46	332,85	392,50	379,37	331,65	353,05
1122	229,38	75,88	86,81	1,46	332,92	392,22	379,55	331,17	353,27
1123	228,96	75,99	86,81	1,46	332,78	392,22	379,59	330,67	353,53
1124	228,77	75,93	86,66	1,41	332,58	392,12	379,73	330,20	353,33
1125	228,34	76,25	86,89	1,41	332,85	391,63	379,68	329,90	353,10
1126	228,20	76,17	86,92	1,41	332,60	391,26	379,78	329,21	352,88
1127	227,15	76,05	86,67	1,41	332,77	390,70	379,56	327,99	352,45
1128	226,69	76,03	86,77	1,36	332,80	390,10	379,60	326,70	352,32
1129	226,13	76,14	86,85	1,36	332,74	389,35	379,44	327,10	351,94
1130	225,93	76,03	86,66	1,36	332,63	388,54	379,35	326,06	351,53
1131	225,22	76,14	86,59	1,31	332,18	387,91	379,35	324,71	351,54
1132	224,43	76,23	86,56	1,31	332,56	386,85	379,00	323,48	350,86
1133	223,48	76,37	86,49	1,31	331,62	386,00	378,77	322,83	350,59
1134	222,89	76,26	86,44	1,31	331,65	384,82	378,59	322,19	349,91
1135	222,24	76,34	86,39	1,26	331,65	383,52	378,10	321,41	349,29
1136	221,61	76,40	86,37	1,26	331,30	382,33	377,73	320,51	348,63

1137	221,10	76,30	86,65	1,26	331,39	381,13	377,21	319,76	347,53
1138	220,19	76,21	86,42	1,21	330,56	380,12	376,80	317,70	347,08
1139	219,67	76,27	86,40	1,21	330,54	378,95	376,36	317,02	346,32
1140	219,74	76,22	85,97	1,21	330,19	377,35	375,76	315,37	345,24
1141	218,75	76,19	85,98	1,21	329,75	376,22	375,22	315,49	344,66
1142	218,42	76,18	86,09	1,16	329,37	375,05	374,62	314,38	343,81
1143	218,40	76,16	86,26	1,16	329,51	373,81	373,90	313,72	342,83
1144	217,65	76,17	86,32	1,16	328,50	372,67	373,36	313,29	342,52
1145	217,25	76,10	86,30	1,16	328,43	371,32	372,74	311,78	341,32
1146	216,59	76,05	86,38	1,11	327,92	370,34	371,98	311,09	340,62
1147	216,79	75,04	86,31	1,11	327,98	369,24	371,27	310,31	339,71
1148	216,27	74,91	85,81	1,11	327,03	368,23	370,62	309,23	339,19
1149	215,70	75,43	86,03	1,06	326,70	367,19	369,87	308,70	338,03
1150	214,93	75,52	85,91	1,06	325,96	366,05	369,12	307,06	337,27
1151	214,61	75,74	85,64	1,06	325,51	365,46	368,66	306,20	336,66
1152	214,25	75,81	85,48	1,06	325,27	364,44	368,08	304,27	335,86
1153	213,48	75,79	85,65	1,01	324,73	363,56	367,39	304,26	334,96
1154	212,91	75,91	85,57	1,01	324,35	362,53	366,87	303,29	334,19
1155	212,78	76,07	85,64	1,01	323,88	361,55	366,22	302,04	333,45
1156	212,69	76,04	85,72	1,01	323,19	360,80	365,60	301,55	332,70
1157	212,10	76,03	85,94	0,96	322,94	359,84	365,03	300,39	331,85
1158	211,52	75,94	85,89	0,96	322,70	359,06	364,49	300,44	331,06
1159	211,02	76,13	85,77	0,96	322,04	358,33	363,72	298,38	330,51
1160	210,46	76,05	85,66	0,96	321,59	357,54	363,22	298,38	330,06
1161	210,11	76,07	85,47	0,91	320,84	356,96	362,68	297,62	329,52
1162	209,38	76,13	85,39	0,91	320,57	355,96	362,03	296,77	328,81
1163	209,02	75,95	85,43	0,91	320,27	354,89	361,35	295,92	328,05
1164	208,89	76,01	85,46	0,91	319,81	354,21	360,85	295,48	327,53
1165	208,54	76,10	85,35	0,86	319,45	353,48	360,14	294,72	326,77
1166	207,95	76,10	85,34	0,86	318,84	352,73	359,39	294,83	326,19
1167	207,90	76,16	85,39	0,86	318,40	352,14	358,92	293,62	325,89
1168	207,81	76,23	85,33	0,81	317,76	351,20	358,16	293,27	325,27
1169	207,50	76,10	85,38	0,81	317,67	350,32	357,56	292,89	324,41
1170	207,63	75,46	85,39	0,81	317,51	349,44	356,74	293,58	323,75
1171	207,02	75,45	85,31	0,81	316,52	348,90	355,93	291,58	323,38
1172	206,62	75,52	85,05	0,76	315,93	348,26	355,49	291,16	322,83
1173	205,93	75,60	85,02	0,76	315,67	347,79	354,90	290,29	322,23
1174	204,81	75,79	84,97	0,76	314,90	346,94	354,27	289,70	322,08
1175	205,14	75,83	84,89	0,76	313,96	346,52	353,73	288,63	321,93
1176	204,79	75,90	84,90	0,71	313,74	345,84	353,22	288,83	321,56
1177	204,01	75,89	84,98	0,71	313,03	345,23	352,70	288,10	321,22
1178	203,46	75,84	84,63	0,71	312,83	344,45	352,01	288,63	320,58
1179	202,91	75,97	84,79	0,71	312,35	344,04	351,43	288,02	320,27
1180	202,15	75,86	84,76	0,71	311,92	343,34	350,70	287,35	319,80
1181	201,56	75,92	84,53	0,66	310,81	342,88	350,31	286,39	319,62
1182	200,75	75,96	84,61	0,66	310,34	342,20	349,64	285,89	319,23
1183	200,37	75,87	84,56	0,66	309,55	341,67	348,98	286,06	318,96
1184	200,29	75,95	84,69	0,66	309,03	340,98	348,42	284,60	318,55
1185	200,07	75,89	84,42	0,61	308,32	340,37	347,73	284,19	318,19
1186	199,55	76,14	84,60	0,61	307,19	339,85	347,13	282,39	318,16
1187	199,56	75,92	84,77	0,61	306,86	339,09	346,59	282,41	317,57
1188	199,41	75,98	84,78	0,61	306,22	338,61	346,00	281,68	317,06
1189	198,82	75,98	84,45	0,56	305,07	338,14	345,50	280,82	316,76
1190	198,66	75,98	84,58	0,56	304,62	337,42	344,92	280,10	316,36
1191	198,61	76,02	84,42	0,56	303,79	336,65	344,25	279,31	316,03
1192	198,54	76,02	84,35	0,56	302,94	336,27	343,70	278,18	315,68
1193	198,30	75,91	84,56	0,51	302,34	335,61	343,02	278,76	315,17
1194	197,77	76,14	84,28	0,51	301,56	335,13	342,37	278,14	314,71
1195	197,70	76,13	84,69	0,51	300,75	334,65	341,86	277,60	314,41
1196	197,63	76,08	84,69	0,51	299,93	334,20	341,33	277,24	313,87
1197	197,47	76,06	84,55	0,46	299,05	333,68	340,80	276,35	313,70
1198	197,49	76,07	84,41	0,46	298,45	333,00	340,18	276,18	313,13
1199	197,17	76,22	84,46	0,46	297,35	332,64	339,66	275,00	312,87
1200	196,99	76,02	84,51	0,46	296,80	332,30	339,13	274,37	312,51
1201	196,88	76,14	84,25	0,46	295,92	331,57	338,56	273,85	312,03
1202	196,36	76,08	84,28	0,41	295,00	331,25	337,96	273,46	311,66
1203	196,18	76,33	84,37	0,41	294,67	330,55	337,43	272,90	311,17
1204	195,92	76,35	84,20	0,41	293,68	330,42	336,82	271,87	310,90
1205	195,83	76,09	84,45	0,41	293,38	330,01	336,27	271,86	310,39
1206	195,55	75,97	84,17	0,36	292,37	329,88	335,83	271,19	310,12
1207	195,32	76,08	84,30	0,36	291,98	329,45	335,34	270,99	309,64
1208	195,31	76,05	84,18	0,36	290,98	329,18	334,84	270,18	309,56
1209	194,81	76,01	84,19	0,36	290,58	328,59	334,37	270,45	309,07
1210	194,42	75,93	84,18	0,31	289,87	328,19	333,75	269,88	308,81
1211	194,09	76,13	84,06	0,31	289,35	328,01	333,30	268,85	308,39
1212	193,65	76,09	84,07	0,31	288,65	327,83	332,84	268,05	307,85
1213	192,80	76,16	84,18	0,31	287,97	327,64	332,47	267,65	307,49
1214	192,33	76,02	83,97	0,31	287,58	327,38	332,00	266,78	306,95
1215	191,71	76,14	83,86	0,26	286,99	327,12	331,52	266,16	306,38
1216	191,36	76,10	83,82	0,26	286,77	326,73	330,95	265,71	305,72
1217	191,14	76,15	83,81	0,26	286,42	326,49	330,56	265,05	305,12
1218	190,88	76,31	83,92	0,26	286,38	326,00	329,91	264,95	304,20
1219	190,56	76,46	83,80	0,26	286,19	325,20	329,35	264,07	303,44
1220	189,97	76,40	83,83	0,21	285,60	324,69	328,90	263,62	302,72
1221	189,85	76,46	84,04	0,21	285,40	324,16	328,37	263,83	301,98
1222	189,33	76,22	83,83	0,21	284,92	323,80	327,95	263,49	301,12
1223	189,02	76,21	83,85	0,21	284,68	323,19	327,50	262,37	300,39
1224	188,81	76,28	84,05	0,16	284,10	322,84	327,07	262,28	299,98
1225	188,44	76,21	83,83	0,16	283,61	322,27	326,50	261,67	299,18
1226	187,88	76,07	83,57	0,16	283,16	321,93	326,22	260,86	298,44
1227	187,89	76,25	83,83	0,16	282,90	321,57	325,76	260,52	298,02
1228	187,58	76,29	83,56	0,16	282,49	320,91	325,35	259,52	297,13
1229	187,35	76,34	83,67	0,16	282,15	320,40	324,87	259,20	296,47
1230	187,60	76,35	83,67	0,11	281,80	319,94	324,43	258,39	295,81
1231	187,03	76,30	83,67	0,11	281,07	319,42	323,95	258,27	295,11

1232	187,32	76,27	83,49	0,11	280,85	318,85	323,52	257,93	294,40
1233	186,88	76,35	83,63	0,11	280,23	318,60	323,11	256,72	293,73
1234	186,69	76,46	83,59	0,11	280,09	318,20	322,63	256,50	293,09
1235	186,08	76,37	83,49	0,11	279,18	317,94	322,19	255,50	292,62
1236	186,11	76,43	83,59	0,11	278,94	317,36	321,79	255,63	291,89
1237	185,76	76,30	83,65	0,00	278,93	317,07	321,37	255,45	291,27
1238	72,53	72,31	75,32	6,01	71,12	70,10	69,72	72,20	70,50
1239	105,42	72,28	80,19	6,01	71,05	69,98	69,67	75,71	70,55
1240	277,22	72,37	98,08	5,76	71,98	69,97	69,52	97,77	72,33
1241	340,95	72,31	99,19	5,61	74,37	70,72	69,43	138,95	75,46
1242	407,70	72,35	108,35	5,41	78,17	72,56	69,41	194,02	80,96
1243	367,83	72,26	106,67	5,36	84,02	75,77	69,46	234,93	87,65
1244	332,06	72,22	104,38	5,26	90,03	79,88	69,52	256,72	94,49
1245	302,36	72,44	101,75	5,16	95,37	84,65	69,71	266,05	100,35
1246	299,94	72,31	101,64	5,11	100,41	89,53	69,98	270,89	105,88
1247	297,83	72,33	100,94	5,01	105,23	94,53	70,40	273,32	110,97
1248	306,59	72,18	101,95	4,96	109,94	99,70	70,97	277,66	115,98
1249	324,83	72,38	104,00	4,86	114,55	104,87	71,67	283,72	120,99
1250	349,72	72,25	106,96	4,76	119,17	110,22	72,54	291,83	125,98
1251	383,70	72,33	111,62	4,61	124,01	115,74	73,52	304,73	131,35
1252	419,59	72,39	117,18	4,46	129,47	121,66	74,63	323,17	137,78
1253	472,27	72,48	125,86	4,26	136,05	128,02	75,82	348,09	145,66
1254	514,33	72,63	133,99	4,06	144,21	135,04	77,12	379,00	154,66
1255	561,07	72,51	143,45	3,81	153,66	142,54	78,55	419,04	165,16
1256	586,01	72,60	150,63	3,56	164,87	150,74	80,13	460,44	177,65
1257	600,05	72,75	156,02	3,31	177,08	159,55	81,86	497,76	191,15
1258	579,45	73,02	155,53	3,06	190,40	168,97	83,95	525,00	205,24
1259	571,58	72,73	154,37	2,91	204,20	178,78	86,34	541,75	218,71
1260	577,07	72,10	156,09	2,71	218,05	188,79	89,14	553,24	232,40
1261	593,12	72,62	159,14	2,46	231,82	199,05	92,28	569,89	246,48
1262	529,07	72,82	224,95	10,76	245,45	209,67	95,96	574,19	259,87
1263	367,02	72,78	213,84	16,52	256,29	211,62	100,57	535,25	267,55
1264	335,27	72,69	205,66	16,37	263,72	211,37	105,35	497,05	272,92
1265	370,47	72,76	176,50	16,16	268,55	210,95	110,68	469,45	275,51
1266	409,96	72,80	151,87	15,97	272,49	210,16	116,10	456,25	277,36
1267	460,19	72,84	147,55	15,82	276,40	209,58	121,75	450,46	280,44
1268	534,31	72,97	151,36	15,57	279,93	209,52	127,50	460,54	283,26
1269	576,65	72,59	157,10	15,32	284,26	208,70	133,11	485,59	286,25
1270	600,47	73,02	161,35	15,02	290,13	206,34	138,69	514,77	289,22
1271	602,39	72,96	163,10	14,82	297,21	208,76	144,04	539,95	291,92
1272	628,42	73,06	167,22	14,57	306,25	209,32	149,19	565,36	294,76
1273	658,05	72,86	172,21	14,27	316,06	210,13	154,24	594,44	298,73
1274	690,35	73,57	178,96	13,97	327,24	211,61	159,05	626,26	305,13
1275	725,29	73,39	185,65	13,67	338,84	213,27	163,75	658,73	313,21
1276	733,62	73,36	189,65	13,32	351,20	215,83	168,40	687,75	322,43
1277	724,40	74,03	190,66	13,02	363,47	219,15	172,77	709,20	332,96
1278	725,59	73,74	191,50	12,72	375,93	222,89	177,08	723,69	343,82
1279	732,01	73,87	193,52	12,42	388,12	226,47	181,24	735,85	354,51
1280	741,42	74,20	196,51	12,17	399,83	230,46	185,19	750,43	365,47
1281	745,87	74,70	197,04	11,82	411,05	234,78	189,29	765,50	376,51
1282	747,94	73,99	198,18	11,52	421,90	238,46	193,30	777,67	387,35
1283	746,23	74,35	199,28	11,21	432,49	242,24	197,72	787,52	397,91
1284	741,18	75,01	198,55	10,96	442,50	246,19	202,50	793,27	408,31
1285	732,66	75,18	196,63	10,66	451,80	250,29	207,33	795,15	418,36
1286	725,71	75,25	194,93	10,41	460,62	254,10	212,19	794,32	427,76
1287	718,14	75,02	193,92	10,11	468,62	258,15	217,69	791,81	437,33
1288	710,98	74,92	192,62	9,86	476,28	262,14	223,07	788,72	445,34
1289	706,26	75,12	191,67	9,61	483,56	266,02	228,58	785,10	452,50
1290	706,23	74,96	191,12	9,36	490,19	269,91	234,23	784,82	459,30
1291	708,29	75,12	190,53	9,11	496,26	272,77	240,07	785,95	466,15
1292	710,17	74,41	190,61	8,81	502,41	277,14	246,09	788,36	471,17
1293	707,19	74,80	190,58	8,56	507,68	280,94	251,93	790,77	477,39
1294	706,83	75,36	189,76	8,31	513,47	284,11	257,80	792,34	482,68
1295	706,36	75,05	188,91	8,06	518,37	288,01	263,77	794,79	488,28
1296	703,30	75,25	188,58	7,81	523,82	291,48	269,51	795,46	493,20
1297	700,18	75,92	188,11	7,56	528,94	293,27	275,36	793,87	498,53
1298	698,90	75,48	186,84	7,31	534,00	295,19	281,39	793,65	504,04
1299	696,47	75,95	185,18	7,06	539,32	297,14	287,39	793,15	508,95
1300	691,21	74,71	184,49	6,86	543,66	299,20	293,39	791,51	513,75
1301	687,08	75,51	183,66	6,61	548,60	301,86	299,16	788,49	518,23
1302	681,39	75,58	182,74	6,41	552,84	303,81	305,21	785,36	522,25
1303	678,57	75,91	181,30	6,21	556,94	305,63	311,14	781,58	526,29
1304	672,31	75,89	179,76	6,01	560,91	307,52	317,12	777,93	529,99
1305	667,25	75,42	177,65	5,81	564,76	309,47	323,22	773,79	533,69
1306	662,81	75,53	175,75	5,61	568,20	311,18	329,24	769,03	537,25
1307	659,42	75,57	174,65	5,41	571,11	313,13	335,29	763,05	540,07
1308	654,22	75,93	173,81	5,26	574,11	314,60	341,25	757,99	542,92
1309	650,45	76,29	172,40	5,06	576,63	316,30	347,10	753,91	545,53
1310	643,67	75,23	170,14	4,91	578,57	317,90	353,07	745,54	548,14
1311	634,49	75,17	168,20	4,76	580,19	319,82	358,78	738,34	550,39
1312	624,49	74,79	166,56	4,61	581,26	321,11	364,63	727,18	552,43
1313	616,95	75,19	163,77	4,46	582,37	322,59	370,38	716,13	553,80
1314	609,02	75,80	162,05	4,36	583,08	324,22	376,09	705,48	555,32
1315	601,13	75,23	159,80	4,21	582,94	325,21	381,70	694,25	555,56
1316	592,34	75,84	158,34	4,11	582,74	325,72	387,10	682,34	556,39
1317	589,31	75,48	157,47	4,01	581,64	326,70	392,43	673,23	556,71
1318	586,88	76,02	156,17	3,86	579,92	342,88	397,57	665,34	557,21
1319	585,50	75,21	155,22	3,76	578,41	371,51	402,35	656,92	557,11
1320	585,05	75,91	155,04	3,66	577,22	391,33	407,03	651,50	556,99
1321	585,11	76,18	155,17	3,56	575,01	406,49	411,51	649,37	556,02
1322	581,41	75,04	154,12	3,46	573,24	418,91	415,78	645,97	555,19
1323	577,32	75,40	152,77	3,36	571,11	428,97	420,00	643,75	554,10
1324	573,48	75,89	151,03	3,26	568,97	437,19	423,82	639,09	553,34
1325	568,45	76,00	150,09	3,21	566,58	443,88	427,74	637,04	552,31
1326	557,12	75,68	148,39	3,11	564,09	450,14	431,46	630,46	550,73

1327	544,77	75,60	146,57	3,06	561,02	455,30	435,21	621,39	548,98
1328	432,10	75,49	203,93	13,52	558,07	459,67	439,25	595,31	548,98
1329	452,07	75,50	227,67	15,11	554,36	463,13	444,66	559,20	547,35
1330	580,17	76,48	185,90	15,62	548,41	466,49	449,82	571,11	543,89
1331	685,97	75,48	185,56	15,32	542,28	468,08	454,29	606,15	538,78
1332	732,85	75,95	190,09	15,02	536,34	469,46	458,08	655,86	534,15
1333	747,26	76,01	192,46	14,72	531,86	469,48	461,55	701,69	529,65
1334	753,87	75,51	193,85	14,42	529,08	470,15	464,33	735,12	526,09
1335	757,28	75,65	195,32	14,12	527,69	469,89	466,73	761,76	523,77
1336	755,79	76,41	196,54	13,82	527,46	470,28	468,85	779,94	522,78
1337	756,61	75,88	196,46	13,57	527,97	469,84	470,37	792,30	522,06
1338	757,17	76,57	196,20	13,27	528,76	469,52	471,47	800,99	522,37
1339	746,79	76,59	194,93	13,02	529,88	469,33	472,38	804,04	523,15
1340	735,65	76,76	193,69	12,77	531,39	469,69	472,64	804,17	524,31
1341	697,72	76,42	185,94	12,52	532,72	469,97	472,60	796,93	525,76
1342	643,64	76,89	170,59	12,26	533,93	470,71	472,13	784,54	526,94
1343	568,38	76,92	151,75	12,11	534,54	470,63	471,37	769,55	527,88
1344	527,35	76,69	141,09	11,97	533,94	470,24	470,29	750,04	527,85
1345	495,61	75,96	133,96	11,81	531,69	470,51	468,91	731,15	527,30
1346	472,13	75,90	128,45	11,71	528,50	470,11	467,48	708,31	525,33
1347	454,10	75,72	124,30	11,56	524,01	469,38	465,92	687,07	522,51
1348	439,60	75,94	121,27	11,46	518,88	468,92	464,02	667,67	518,99
1349	429,48	75,93	119,00	11,36	513,51	467,35	462,08	650,67	514,24
1350	418,44	75,78	117,11	11,21	507,83	465,92	459,99	634,57	509,90
1351	409,21	76,29	115,16	11,11	502,26	464,41	457,93	620,85	504,03
1352	400,14	76,18	113,48	11,01	496,54	462,62	455,65	606,26	497,86
1353	391,71	76,24	112,00	10,91	491,29	459,64	453,44	592,86	491,79
1354	386,78	75,38	111,03	10,81	485,94	457,14	451,17	581,51	485,35
1355	380,79	75,82	109,74	10,71	480,77	454,91	448,71	567,10	479,07
1356	373,53	75,66	108,52	10,61	475,95	451,90	446,38	556,40	472,72
1357	357,50	75,57	109,01	10,51	471,61	449,26	443,83	544,03	466,51
1358	447,95	76,07	124,27	10,36	466,57	446,42	440,99	531,43	461,25
1359	514,59	75,56	129,54	10,16	461,81	443,38	438,11	531,20	457,14
1360	447,79	75,42	118,98	10,01	458,03	439,89	435,73	540,42	453,77
1361	426,33	75,18	115,58	9,86	454,48	437,11	433,11	545,71	451,09
1362	420,36	75,59	113,25	9,71	451,86	434,56	430,32	556,77	449,60
1363	419,17	74,80	111,91	9,56	449,77	431,80	427,76	565,26	448,52
1364	423,33	75,11	111,55	9,41	448,60	429,81	425,12	573,87	447,91
1365	428,25	75,62	110,71	9,26	447,38	428,67	422,60	583,16	448,02
1366	425,49	75,34	110,66	9,16	446,38	427,54	420,05	589,29	448,40
1367	420,92	75,40	110,03	9,01	445,78	426,63	417,55	594,38	449,60
1368	412,37	75,53	108,23	8,91	444,47	426,08	414,94	594,55	450,38
1369	399,36	75,72	106,91	8,81	443,38	425,21	412,43	590,58	450,93
1370	386,86	75,74	105,68	8,71	441,85	425,21	409,91	584,39	451,51
1371	381,92	75,64	104,76	8,61	439,94	425,62	407,50	576,98	451,84
1372	378,51	75,62	104,55	8,56	437,78	424,79	404,98	572,36	450,51
1373	374,00	75,38	104,05	8,46	435,51	424,78	402,79	570,03	449,30
1374	373,62	75,14	103,74	8,36	432,52	424,12	400,41	560,10	448,52
1375	374,69	74,98	103,07	8,26	429,55	423,85	398,17	554,08	447,28
1376	376,67	75,29	102,94	8,16	426,42	423,16	396,05	550,50	445,38
1377	378,56	74,86	102,44	8,06	423,14	422,69	393,65	548,02	444,56
1378	381,35	74,78	102,88	7,96	419,93	421,96	391,41	547,77	443,38
1379	385,21	74,87	102,71	7,86	417,15	421,53	389,37	548,90	442,63
1380	388,84	75,20	102,65	7,76	414,50	421,36	387,40	549,63	442,24
1381	390,31	74,62	103,10	7,61	412,13	420,48	385,18	551,49	441,84
1382	392,74	75,11	102,78	7,51	409,67	419,98	383,28	555,01	442,02
1383	394,59	74,82	103,11	7,41	407,68	419,40	381,24	557,25	442,16
1384	396,83	75,31	103,14	7,31	406,32	419,14	379,32	560,13	442,39
1385	399,18	75,04	103,17	7,16	405,26	418,90	377,21	563,38	442,97
1386	402,65	75,13	103,39	7,06	404,57	418,26	375,45	568,44	443,97
1387	404,03	75,16	103,89	6,91	404,26	381,34	373,57	574,20	445,19
1388	407,67	74,92	104,49	6,81	403,82	358,32	371,98	580,22	446,67
1389	410,37	75,05	104,50	6,66	403,97	343,59	370,29	586,76	448,71
1390	415,30	74,92	104,93	6,56	404,43	333,43	368,76	590,39	450,57
1391	418,22	74,98	105,23	6,41	404,89	325,29	367,16	597,23	452,70
1392	421,09	75,02	105,14	6,31	405,64	319,72	365,74	604,59	454,73
1393	421,02	75,13	105,35	6,16	406,57	315,68	364,31	611,10	457,22
1394	420,18	75,05	105,35	6,06	407,55	312,50	362,99	616,01	459,19
1395	416,90	75,09	105,19	5,91	408,88	310,74	361,54	617,43	461,19
1396	414,16	75,19	104,83	5,81	410,40	309,98	360,17	620,79	463,17
1397	410,98	75,07	104,86	5,71	411,95	308,77	358,93	621,18	465,02
1398	410,42	75,22	104,34	5,56	413,75	308,02	357,62	621,77	466,58
1399	410,46	75,21	104,56	5,46	415,47	308,19	356,32	620,69	468,30
1400	408,68	74,97	104,24	5,36	417,22	307,65	355,19	622,23	469,77
1401	405,70	75,01	104,19	5,26	418,92	306,95	354,03	622,10	471,14
1402	403,87	75,02	103,82	5,16	420,40	306,45	352,89	620,58	472,56
1403	403,31	75,16	103,70	5,06	421,71	306,43	351,77	619,34	473,75
1404	402,74	75,17	103,45	4,91	422,69	306,03	350,78	617,27	474,48
1405	402,36	75,12	103,52	4,86	423,52	304,78	349,60	616,38	475,34
1406	399,70	74,94	103,05	4,76	423,96	302,71	348,71	611,53	475,89
1407	393,78	75,07	102,73	4,66	424,28	302,38	347,78	607,98	476,42
1408	387,74	75,14	102,33	4,56	424,64	301,46	346,88	603,29	476,71
1409	385,20	75,34	102,15	4,46	424,67	300,82	346,01	600,20	476,92
1410	383,60	75,00	101,82	4,41	424,67	300,68	345,11	597,74	476,86
1411	383,69	75,00	101,68	4,31	424,61	300,38	344,17	595,03	476,55
1412	383,38	75,10	101,45	4,21	424,37	300,04	343,49	594,81	476,19
1413	382,16	75,00	101,35	4,11	424,33	300,21	342,79	592,93	475,75
1414	380,40	75,28	100,89	4,06	424,25	300,35	342,05	592,45	475,22
1415	379,32	75,21	100,79	3,96	424,05	301,02	341,35	592,22	475,12
1416	375,23	75,17	100,49	3,86	423,92	301,01	340,64	590,48	474,76
1417	371,66	74,98	100,27	3,81	423,67	301,80	339,92	588,87	474,24
1418	367,30	75,01	99,98	3,76	423,41	301,98	339,28	585,53	473,65
1419	361,75	75,12	99,32	3,66	423,11	301,79	338,62	581,48	472,88
1420	357,81	75,15	98,64	3,61	423,12	302,34	338,02	576,72	471,91
1421	352,90	74,88	98,54	3,56	422,39	302,68	337,57	569,55	470,73

1422	348,53	75,10	98,25	3,51	422,00	302,84	337,12	562,11	469,04
1423	344,13	75,03	97,82	3,46	421,61	302,97	336,74	554,59	467,29
1424	340,93	74,96	97,21	3,41	421,11	302,60	336,31	548,00	465,29
1425	335,79	75,05	96,79	3,36	420,74	302,18	336,05	541,52	462,99
1426	329,59	75,06	96,24	3,31	420,26	301,55	335,67	533,89	461,02
1427	323,84	74,97	95,97	3,31	419,79	301,50	335,41	524,53	458,86
1428	318,90	74,99	95,61	3,26	419,03	300,82	335,18	515,84	456,20
1429	313,36	74,94	94,90	3,21	418,19	299,92	335,01	506,62	453,96
1430	307,31	74,80	94,19	3,21	416,96	299,00	334,86	497,26	451,34
1431	300,70	74,90	93,59	3,16	415,64	297,45	334,68	488,08	448,68
1432	293,61	74,91	92,87	3,16	414,07	295,87	334,62	477,65	445,92
1433	287,66	75,04	92,19	3,16	412,21	294,03	334,48	467,10	443,10
1434	279,92	74,84	91,88	3,11	410,12	292,27	334,42	456,16	440,29
1435	273,57	74,83	91,28	3,11	408,01	289,95	334,47	444,58	437,66
1436	268,52	74,81	90,44	3,11	405,47	287,48	334,47	433,55	434,73
1437	263,55	75,01	89,98	3,06	403,17	284,59	334,51	423,14	431,76
1438	258,46	74,76	89,85	3,06	400,15	281,62	334,70	412,66	428,75
1439	254,54	74,69	89,32	3,06	397,25	278,18	334,85	404,09	425,72
1440	251,04	74,48	89,08	3,01	394,63	274,84	334,85	395,34	422,68
1441	248,21	74,68	88,68	3,01	392,03	272,04	335,00	387,12	419,62
1442	246,08	74,62	88,29	3,01	389,17	268,63	335,10	379,85	416,58
1443	243,62	74,63	88,12	2,96	386,54	267,71	335,03	372,92	413,39
1444	240,92	74,73	87,86	2,96	383,94	266,49	335,03	367,29	410,24
1445	238,80	74,70	87,66	2,91	381,42	264,91	335,16	361,40	407,26
1446	237,10	74,68	87,14	2,91	378,86	263,38	335,35	356,63	404,36
1447	235,17	74,50	87,16	2,91	376,57	262,73	335,20	352,17	401,30
1448	233,09	74,62	86,79	2,91	374,00	261,34	335,45	347,75	398,44
1449	231,50	74,23	86,71	2,86	371,72	260,06	335,46	343,56	395,30
1450	229,73	74,01	86,73	2,86	369,32	258,53	335,42	339,95	392,79
1451	228,28	74,57	86,36	2,86	367,23	257,39	335,43	336,58	390,35
1452	226,79	74,22	86,18	2,81	365,05	256,11	335,38	333,58	387,77
1453	225,82	74,30	86,13	2,81	363,21	253,99	335,51	329,90	385,49
1454	224,10	74,02	85,82	2,81	361,36	252,94	335,51	326,93	383,20
1455	222,96	73,89	85,71	2,76	359,58	251,06	335,51	324,05	381,11
1456	221,86	73,78	85,27	2,76	357,96	250,52	335,54	321,57	378,96
1457	220,70	74,03	85,58	2,76	356,30	249,43	335,64	318,59	376,97
1458	219,68	74,02	85,42	2,71	354,62	248,50	335,74	316,28	375,02
1459	218,45	73,96	85,08	2,71	353,15	247,61	335,79	314,66	372,99
1460	217,62	73,91	84,90	2,71	351,58	246,61	335,82	312,91	371,32
1461	216,25	73,90	84,78	2,71	350,15	245,98	336,02	310,79	369,33
1462	215,32	74,06	84,65	2,66	348,89	245,29	336,03	308,75	367,88
1463	214,48	73,93	84,74	2,66	347,65	244,31	336,10	307,02	366,31
1464	214,22	72,64	84,73	2,66	346,30	243,08	336,22	305,19	364,60
1465	214,62	70,70	84,15	2,61	345,29	242,05	336,36	303,23	363,06
1466	213,27	71,62	84,52	2,61	343,80	240,50	336,50	301,72	361,74
1467	212,46	71,69	84,35	2,61	342,63	239,54	336,39	300,48	360,45
1468	211,52	72,27	84,19	2,56	341,69	238,71	336,51	298,77	359,34
1469	211,41	72,66	83,82	2,56	340,67	237,51	336,54	297,98	358,20
1470	210,59	72,70	83,81	2,56	339,59	236,93	336,66	296,73	357,03
1471	209,81	72,63	83,69	2,51	338,49	236,57	336,65	295,57	355,96
1472	210,03	72,90	83,63	2,51	337,67	235,82	336,77	294,32	354,90
1473	209,49	72,79	83,51	2,51	336,70	235,56	336,71	293,18	353,88
1474	208,55	72,63	83,50	2,51	335,63	235,05	336,82	292,56	352,88
1475	208,29	72,96	83,51	2,46	334,95	235,52	336,83	291,00	351,97
1476	207,78	72,40	83,48	2,46	333,98	235,80	336,93	290,34	351,00
1477	207,18	72,85	83,34	2,46	333,19	235,55	337,01	289,48	350,11
1478	207,22	72,75	83,26	2,41	332,33	235,19	337,12	288,74	349,17
1479	206,64	72,60	83,45	2,41	331,52	235,19	337,20	288,26	348,33
1480	206,16	72,85	83,42	2,41	330,75	234,80	337,23	287,20	347,58
1481	206,39	73,03	83,39	2,36	329,84	234,76	337,33	286,58	346,57
1482	205,65	72,96	83,21	2,36	329,09	233,87	337,38	285,92	346,08
1483	205,58	72,83	82,94	2,36	328,25	233,70	337,41	284,93	345,37
1484	205,54	73,20	82,95	2,36	327,71	234,21	337,37	284,91	344,74
1485	205,35	73,01	82,73	2,31	327,00	233,95	337,51	284,48	344,08
1486	205,09	72,79	82,91	2,31	326,20	233,46	337,65	283,69	343,44
1487	204,90	72,99	82,95	2,31	325,65	232,14	337,69	283,33	343,01
1488	204,53	72,91	83,03	2,26	325,01	231,43	337,87	282,23	342,41
1489	204,03	72,86	82,87	2,26	324,56	231,07	338,02	281,95	341,94
1490	204,06	73,05	82,94	2,26	324,06	231,21	338,10	281,51	341,41
1491	204,19	73,34	83,03	2,21	323,45	231,14	338,03	281,34	340,82
1492	204,04	72,97	82,73	2,21	322,69	230,48	338,13	280,87	340,40
1493	203,58	73,11	82,69	2,21	322,12	230,13	338,23	280,40	339,87
1494	203,19	73,09	82,93	2,16	321,68	230,06	338,37	279,72	339,48
1495	203,75	73,18	82,70	2,16	321,08	229,67	338,46	279,32	339,05
1496	203,22	73,27	83,00	2,16	320,46	229,17	338,55	279,28	338,61
1497	202,71	73,02	82,89	2,16	319,87	229,05	338,62	278,83	338,11
1498	203,12	73,39	82,40	2,11	319,40	229,06	338,75	278,11	337,77
1499	203,32	73,40	82,63	2,11	318,77	228,13	338,90	277,82	337,25
1500	202,77	73,51	82,44	2,11	318,27	228,13	339,07	277,63	336,86
1501	202,79	73,38	82,42	2,06	317,54	228,10	339,07	277,03	336,46
1502	201,21	73,53	82,90	2,06	317,23	227,96	339,20	277,05	336,01
1503	199,73	73,34	82,43	2,06	316,75	227,74	339,29	276,11	335,69
1504	199,61	73,37	82,56	2,01	316,26	227,61	339,49	275,91	335,13
1505	198,92	73,55	82,55	2,01	315,74	227,40	339,60	275,20	334,67
1506	198,30	73,48	82,36	2,01	315,70	227,21	339,68	275,37	334,06
1507	198,24	73,45	82,62	2,01	315,06	227,04	339,81	275,05	333,62
1508	197,77	73,65	82,21	1,96	314,64	227,31	339,94	274,43	333,11
1509	197,86	73,58	82,22	1,96	314,31	227,18	340,01	274,17	332,61
1510	197,44	73,36	82,13	1,96	313,89	227,71	340,24	274,06	332,06
1511	197,53	73,41	82,12	1,91	313,64	228,10	340,35	273,89	331,64
1512	197,09	73,50	81,95	1,91	313,56	228,56	340,53	273,57	331,15
1513	197,39	73,59	81,81	1,91	313,04	228,56	340,68	273,85	330,67
1514	196,84	73,50	81,89	1,86	312,75	228,65	340,87	273,62	330,26
1515	196,45	73,58	81,64	1,86	312,45	228,72	341,03	273,30	329,77
1516	196,79	73,40	81,50	1,86	312,45	228,20	341,17	273,16	329,43

1517	196,81	73,56	81,59	1,81	312,01	227,85	341,33	273,24	329,06
1518	196,81	73,57	81,82	1,81	311,78	227,56	341,53	273,08	328,65
1519	196,86	73,59	81,70	1,81	311,62	227,63	341,68	272,98	328,34
1520	196,41	73,60	81,73	1,81	311,39	227,30	341,78	272,62	328,02
1521	196,78	73,40	81,81	1,76	311,19	227,19	342,00	272,62	327,67
1522	196,37	73,54	81,47	1,76	311,06	227,19	342,20	272,50	327,33
1523	196,19	73,59	81,52	1,76	310,89	227,32	342,37	272,13	326,98
1524	196,53	73,53	81,63	1,71	310,71	227,26	342,48	272,11	326,78
1525	196,36	73,56	81,61	1,71	310,74	227,04	342,63	271,93	326,62
1526	196,18	73,48	81,51	1,71	310,64	227,02	342,76	272,21	326,37
1527	196,14	73,48	81,53	1,71	310,64	226,92	342,86	272,03	326,14
1528	196,20	73,47	81,57	1,66	310,37	226,35	342,93	272,10	325,89
1529	196,78	73,44	81,63	1,66	310,32	226,28	343,02	272,15	325,65
1530	197,10	73,62	81,57	1,66	310,33	226,10	343,20	271,74	325,57
1531	197,12	73,63	81,65	1,61	310,46	225,81	343,37	270,94	325,32
1532	196,73	73,59	81,47	1,61	310,12	226,16	343,41	271,62	325,32
1533	196,48	73,57	81,56	1,61	310,05	226,12	343,60	271,39	325,02
1534	196,94	73,67	81,34	1,56	309,99	226,35	343,72	271,43	324,88
1535	196,88	73,72	81,64	1,56	309,90	226,48	343,82	271,36	324,58
1536	196,66	73,71	81,59	1,56	309,86	226,86	343,90	271,93	324,35
1537	197,03	73,58	81,55	1,51	309,85	226,89	343,93	272,00	324,20
1538	196,85	73,91	81,50	1,51	309,95	226,89	344,00	272,07	323,91
1539	196,74	73,87	81,71	1,51	309,91	226,92	344,17	272,03	323,69
1540	196,57	73,81	81,26	1,51	309,98	226,86	344,37	272,14	323,38
1541	197,01	73,64	81,59	1,46	309,96	226,97	344,43	272,26	323,18
1542	196,55	73,46	81,58	1,46	310,02	226,34	344,67	272,28	322,84
1543	196,80	72,65	81,53	1,46	310,23	225,74	344,83	272,35	322,60
1544	196,51	72,38	81,70	1,46	310,14	225,73	344,92	272,09	322,32
1545	196,61	72,58	81,74	1,41	310,22	225,56	345,04	272,19	322,24
1546	196,92	72,41	81,83	1,41	310,32	225,70	345,13	272,61	321,92
1547	197,25	72,66	81,36	1,41	310,49	225,84	345,22	272,49	321,80
1548	197,32	72,74	81,10	1,36	310,54	226,10	345,32	272,57	321,66
1549	196,76	72,83	81,06	1,36	310,45	226,39	345,40	272,43	321,41
1550	197,08	73,45	81,24	1,36	311,15	226,42	345,62	272,90	321,03
1551	197,47	73,27	82,45	1,31	311,00	226,00	345,77	272,62	320,60
1552	197,10	73,37	83,52	1,31	311,38	225,62	345,98	272,39	320,15
1553	196,19	73,88	84,49	1,31	311,17	225,47	346,18	272,71	320,06
1554	195,92	74,11	85,46	1,31	311,03	225,36	346,33	272,51	319,97
1555	196,35	74,25	85,28	1,31	311,03	225,07	346,54	272,59	320,00
1556	196,55	74,38	84,89	1,26	311,08	225,15	346,64	272,60	319,94
1557	197,15	74,39	84,74	1,26	310,87	224,97	346,84	272,23	319,71
1558	197,06	74,50	84,48	1,26	310,84	224,98	346,95	272,66	319,70
1559	196,78	74,36	84,17	1,21	310,87	225,30	346,98	272,12	319,69
1560	196,67	74,37	83,89	1,21	310,88	224,92	347,06	272,26	319,69
1561	196,64	74,06	83,65	1,21	310,42	225,40	347,16	272,35	319,41
1562	196,71	73,93	83,74	1,16	310,63	225,61	347,32	272,62	319,34
1563	196,79	73,55	83,17	1,16	310,38	225,81	347,36	272,17	319,30
1564	196,44	74,11	83,28	1,16	310,24	225,67	347,44	272,20	319,23
1565	196,43	74,03	83,15	1,11	310,14	225,91	347,47	272,44	318,92
1566	196,37	73,62	82,84	1,11	309,95	226,36	347,58	272,26	318,71
1567	196,36	73,74	82,75	1,11	309,88	226,41	347,54	272,70	318,71
1568	196,99	73,55	82,87	1,06	309,77	225,94	347,60	272,46	318,58
1569	196,58	73,82	82,53	1,06	309,55	226,27	347,72	272,52	318,45
1570	197,22	73,79	82,50	1,06	309,19	226,22	347,65	272,23	318,39
1571	197,06	73,40	82,73	1,06	309,19	226,43	347,76	272,27	318,15
1572	196,65	73,76	82,66	1,01	309,13	226,31	347,71	272,10	318,17
1573	196,41	73,49	82,64	1,01	309,11	226,39	347,80	272,01	318,06
1574	196,63	73,68	82,70	1,01	309,21	226,14	347,91	272,05	317,97
1575	196,67	73,57	82,74	0,96	309,18	226,18	347,93	271,61	317,89
1576	196,58	73,86	82,37	0,96	309,56	225,83	348,05	271,96	317,91
1577	197,03	73,82	82,41	0,96	309,16	226,43	348,10	271,57	317,79
1578	196,68	73,48	82,43	0,96	309,18	226,76	348,05	271,80	317,71
1579	196,72	74,01	82,32	0,91	309,07	226,93	348,03	271,36	317,75
1580	195,99	73,74	82,33	0,91	309,15	226,68	348,11	270,95	317,68
1581	195,58	73,90	82,17	0,91	309,07	226,43	348,17	271,45	317,68
1582	195,53	73,94	82,06	0,86	308,90	226,25	348,20	271,33	317,51
1583	195,16	73,84	81,85	0,86	308,76	226,14	348,20	271,18	317,48
1584	195,27	73,50	81,98	0,86	308,65	225,92	348,32	271,10	317,36
1585	195,58	73,84	81,99	0,86	308,47	226,00	348,33	270,38	317,45
1586	195,80	73,78	82,06	0,81	308,14	225,10	348,35	270,55	317,62
1587	195,55	73,94	81,95	0,81	307,74	224,33	348,37	270,27	317,65
1588	195,30	73,84	82,17	0,81	307,58	223,71	348,41	270,02	317,70
1589	195,53	73,91	81,97	0,76	307,15	222,94	348,35	269,90	317,72
1590	194,91	73,94	81,88	0,76	307,02	222,62	348,44	269,72	317,69
1591	194,78	74,01	81,81	0,76	306,73	222,73	348,39	269,21	317,70
1592	194,52	74,01	81,94	0,76	306,55	222,09	348,59	269,37	317,64
1593	193,90	74,05	82,02	0,71	306,31	221,72	348,50	269,12	317,44
1594	193,92	74,02	81,89	0,71	306,06	221,67	348,74	268,86	317,34
1595	193,85	73,80	81,88	0,71	305,90	221,55	348,84	268,73	317,15
1596	193,55	73,97	81,85	0,71	305,65	221,75	348,98	268,71	317,01
1597	193,82	73,78	81,84	0,66	305,53	221,74	348,96	268,94	316,85
1598	193,78	73,83	81,55	0,66	305,43	221,98	349,17	268,45	316,68
1599	194,24	73,93	81,55	0,66	305,13	222,31	349,27	268,68	316,49
1600	193,94	73,90	81,82	0,66	304,83	222,18	349,41	268,65	316,38
1601	193,96	73,77	81,77	0,61	304,70	222,60	349,57	268,85	316,25
1602	193,76	74,00	81,93	0,61	304,34	222,17	349,70	268,90	316,02
1603	193,29	73,96	81,93	0,61	303,95	221,80	349,94	268,57	315,82
1604	193,58	73,86	81,78	0,56	303,76	221,66	350,16	268,73	315,62
1605	193,30	73,85	81,62	0,56	303,27	221,24	350,23	268,38	315,60
1606	193,44	73,73	81,96	0,56	303,24	221,36	350,32	268,39	315,41
1607	193,59	73,93	82,25	0,56	302,54	221,02	350,42	268,25	315,34
1608	193,47	73,80	82,47	0,51	302,42	221,18	350,46	268,89	315,16
1609	193,37	73,86	82,42	0,51	301,65	221,10	350,54	268,71	315,20
1610	193,99	73,76	82,24	0,51	301,22	221,01	350,68	268,89	315,09
1611	193,59	73,88	82,41	0,51	300,91	221,34	350,80	268,49	314,99

1612	193,89	73,55	82,51	0,46	300,48	221,23	350,92	268,79	314,91
1613	193,99	73,85	82,46	0,46	299,99	221,59	351,01	268,87	314,87
1614	194,37	73,94	82,26	0,46	299,59	221,52	350,97	268,88	314,86
1615	194,21	73,97	82,07	0,41	299,24	221,41	350,99	268,52	314,75
1616	193,75	74,00	82,23	0,41	298,88	221,44	351,00	268,29	314,77
1617	193,59	73,80	82,15	0,41	298,61	221,24	351,09	268,25	314,74
1618	193,19	73,79	82,26	0,41	298,09	221,09	351,08	267,80	314,71
1619	193,39	73,58	82,08	0,36	298,05	220,88	351,09	267,12	314,63
1620	193,01	73,54	81,85	0,36	297,52	220,57	351,07	266,89	314,58
1621	192,90	73,77	81,52	0,36	297,01	219,99	351,06	266,00	314,54
1622	192,21	73,90	81,69	0,36	296,57	219,70	351,00	265,68	314,39
1623	192,19	73,85	81,59	0,31	296,29	219,70	351,01	265,29	314,15
1624	192,03	73,85	81,73	0,31	295,89	219,76	350,81	264,88	314,18
1625	191,89	73,98	81,68	0,31	295,42	219,39	350,66	264,08	313,93
1626	190,37	73,70	81,44	0,31	294,79	219,19	350,39	263,51	313,80
1627	188,63	73,63	81,54	0,26	294,20	218,68	350,16	262,55	313,53
1628	187,30	73,88	81,33	0,26	293,65	218,39	349,85	261,81	313,19
1629	186,12	73,85	81,07	0,26	292,95	217,69	349,65	260,15	312,66
1630	184,95	73,56	81,13	0,26	292,16	217,00	349,31	259,34	312,08
1631	183,43	73,89	80,85	0,26	291,36	216,30	348,95	257,64	311,34
1632	182,28	73,99	80,66	0,21	290,62	215,43	348,59	256,23	310,61
1633	181,13	73,80	80,57	0,21	289,72	215,44	348,09	254,99	309,72
1634	179,93	73,82	80,72	0,21	288,72	214,43	347,55	253,68	308,73
1635	179,29	73,98	80,82	0,21	287,84	213,78	346,98	252,33	307,64
1636	178,71	74,00	80,68	0,21	287,13	213,30	346,48	251,22	306,47
1637	178,15	74,03	80,32	0,16	286,04	213,01	345,81	249,76	305,28
1638	177,04	73,61	80,45	0,16	285,09	212,67	345,12	249,02	304,06
1639	176,67	73,92	80,49	0,16	284,07	211,97	344,39	247,91	302,89
1640	176,01	73,79	80,73	0,16	283,07	211,30	343,58	246,91	301,72
1641	175,60	73,92	80,49	0,16	282,05	210,88	342,98	245,93	300,59
1642	175,13	73,97	80,46	0,16	281,17	210,30	342,26	245,17	299,45
1643	174,52	73,84	80,44	0,11	280,17	209,44	341,54	244,02	298,34
1644	174,28	73,91	80,60	0,11	279,20	209,15	340,82	243,03	297,31
1645	173,80	73,88	80,28	0,11	278,27	208,93	340,09	242,43	296,19
1646	173,32	73,90	80,44	0,11	277,39	207,85	339,28	241,37	295,21
1647	172,97	73,83	80,27	0,11	276,57	206,34	338,67	240,55	294,34
1648	172,74	73,71	80,31	0,11	275,59	204,81	337,83	239,64	293,43
1649	172,53	73,52	80,24	0,06	274,78	203,42	337,10	238,75	292,53
1650	172,30	73,65	80,46	0,06	274,00	203,70	336,32	238,23	291,57
1651	171,71	73,74	80,64	0,06	273,21	203,54	335,64	237,52	290,71
1652	171,45	73,63	80,20	0,06	272,25	203,29	334,93	236,71	289,86
1653	171,24	73,60	80,11	0,06	271,45	203,24	334,27	236,39	288,96
1654	170,93	73,76	80,19	0,01	270,65	203,06	333,52	235,79	288,22
1655	76,56	71,12	92,43	6,11	66,99	64,85	66,24	69,55	66,99
1656	102,90	71,39	95,50	6,06	67,07	65,10	66,25	72,60	67,26
1657	170,11	71,67	100,79	5,96	67,92	65,30	66,24	85,62	68,31
1658	233,21	71,78	103,35	5,86	69,72	65,51	66,25	107,37	71,23
1659	289,47	72,00	106,94	5,71	73,89	65,57	66,28	129,70	78,16
1660	366,35	72,06	115,83	5,51	80,47	65,76	66,30	165,13	89,52
1661	404,13	71,97	120,88	5,36	88,58	65,88	66,36	199,90	102,59
1662	468,48	72,03	130,96	5,16	98,19	66,16	66,48	245,04	114,18
1663	532,56	72,27	144,21	4,91	107,90	66,37	66,67	299,74	127,63
1664	538,29	72,43	149,40	4,66	119,12	66,49	66,98	346,99	142,77
1665	546,17	72,52	153,50	4,41	131,17	66,72	67,46	391,99	157,72
1666	515,51	72,56	150,40	4,26	144,25	66,89	68,19	421,67	171,82
1667	491,42	72,41	146,85	4,11	157,99	67,10	69,18	436,50	186,88
1668	479,98	72,56	144,94	3,96	171,25	67,30	70,51	444,28	199,96
1669	480,68	72,37	144,02	3,76	184,82	67,50	72,29	449,90	211,83
1670	478,23	72,36	143,55	3,66	197,49	67,75	74,51	453,70	222,74
1671	485,96	72,58	144,15	3,46	209,12	67,89	77,22	457,39	232,47
1672	495,15	72,55	145,83	3,31	221,00	68,18	80,37	463,43	241,66
1673	509,84	72,75	148,15	3,12	232,37	68,40	84,01	471,38	250,81
1674	525,80	72,65	150,75	3,01	243,65	68,66	88,04	481,21	260,09
1675	523,45	73,01	151,44	2,81	254,48	68,90	92,47	490,22	269,48
1676	521,38	72,85	151,54	2,66	265,02	69,16	97,26	496,95	278,84
1677	521,46	72,77	151,77	2,56	274,83	69,31	102,20	503,52	287,62
1678	521,07	73,09	151,73	2,41	284,63	69,57	107,36	509,96	295,99
1679	517,11	73,33	168,05	3,00	294,35	69,79	112,68	515,32	304,08
1680	482,58	73,18	206,62	17,07	302,10	70,07	118,36	502,22	311,01
1681	535,61	73,34	173,47	16,87	309,20	70,20	124,62	503,09	317,22
1682	601,15	73,37	177,54	16,62	316,08	70,23	131,05	519,89	323,28
1683	675,55	73,78	188,24	16,27	323,53	70,48	137,65	558,18	329,58
1684	717,23	73,82	197,95	15,92	332,49	70,90	144,38	601,76	337,21
1685	747,55	73,84	205,58	15,57	342,72	71,08	150,81	643,68	346,85
1686	761,18	74,83	210,40	15,22	353,35	71,56	156,94	681,85	358,22
1687	754,58	74,58	210,76	14,87	366,30	71,84	162,62	709,28	370,50
1688	762,08	74,24	213,38	14,52	379,05	72,23	167,74	731,99	382,83
1689	771,99	75,14	216,69	14,22	392,27	72,74	172,43	751,72	395,12
1690	781,52	75,59	218,95	13,87	405,37	73,10	176,95	770,72	406,99
1691	789,23	75,94	221,23	13,52	418,47	73,63	181,32	787,30	418,74
1692	795,76	75,45	221,46	13,17	431,30	73,86	185,40	801,26	430,11
1693	786,12	75,53	221,34	12,81	443,97	74,43	189,22	811,47	441,14
1694	773,60	75,87	220,39	12,52	456,91	74,91	193,15	815,78	451,89
1695	763,48	76,51	218,52	12,22	468,17	75,46	197,28	818,55	461,96
1696	751,29	76,56	215,72	11,91	480,33	76,01	201,72	816,02	471,99
1697	736,76	77,02	212,92	11,61	490,09	76,38	205,98	811,17	480,76
1698	723,39	76,17	208,94	11,36	499,63	76,72	210,37	804,96	488,36
1699	699,90	77,36	205,07	11,11	508,10	77,06	214,98	792,91	495,76
1700	676,86	77,08	199,30	10,91	515,59	77,33	219,63	777,43	502,28
1701	658,47	77,48	194,30	10,71	521,41	77,35	224,39	759,28	508,29
1702	642,26	77,49	190,03	10,51	525,71	77,43	229,07	741,01	513,78
1703	630,47	77,42	186,06	10,31	528,71	77,54	233,82	723,23	518,12
1704	621,06	77,04	182,60	10,16	530,90	77,50	238,66	707,25	521,44
1705	614,09	76,63	179,97	9,96	531,61	77,60	243,51	691,10	524,12
1706	608,37	77,03	178,15	9,81	532,21	77,49	248,33	679,98	526,06

1707	605,28	77,08	176,24	9,61	532,29	77,54	253,26	669,56	527,46
1708	601,76	77,30	175,55	9,46	531,95	77,57	258,18	658,71	528,61
1709	599,57	76,84	174,42	9,26	531,53	77,43	263,17	651,71	529,58
1710	597,12	77,41	173,34	9,11	531,13	77,45	268,11	645,63	530,59
1711	593,97	77,07	172,41	8,96	530,71	77,45	273,06	640,45	531,20
1712	592,38	76,32	170,71	8,81	530,29	77,36	277,94	636,08	531,81
1713	593,08	77,02	169,61	8,61	530,18	77,41	282,87	633,43	532,47
1714	592,43	77,22	169,49	8,46	529,41	77,37	287,80	630,52	532,97
1715	591,39	77,34	169,09	8,31	529,27	77,36	292,59	626,96	533,90
1716	589,89	77,35	168,76	8,16	528,90	77,39	297,34	624,98	534,56
1717	589,68	75,92	167,83	8,01	529,98	77,23	302,05	623,11	535,62
1718	587,24	76,15	166,66	7,86	528,84	77,42	306,74	621,14	536,47
1719	584,64	76,95	166,19	7,71	528,28	77,38	311,34	617,36	538,00
1720	580,89	76,18	164,85	7,56	527,87	77,34	315,86	615,48	538,75
1721	574,41	76,72	162,74	7,46	527,35	77,30	320,35	612,31	540,23
1722	570,20	77,34	161,88	7,31	526,24	77,34	324,84	608,56	541,41
1723	566,15	76,66	161,05	7,21	524,90	77,25	329,27	605,47	542,24
1724	561,37	77,23	160,14	7,11	523,51	77,30	333,63	602,13	542,48
1725	558,35	77,20	159,34	6,96	522,06	77,29	337,92	599,64	542,62
1726	549,66	77,37	157,54	6,86	520,62	77,28	342,16	597,95	541,90
1727	545,35	77,05	156,86	6,76	518,98	77,31	346,34	596,06	540,76
1728	545,13	77,21	156,00	6,66	517,32	77,32	350,55	590,34	539,57
1729	542,00	77,28	154,92	6,56	515,75	77,08	354,61	585,67	538,29
1730	536,87	76,94	153,47	6,46	513,27	77,13	358,76	578,79	536,36
1731	532,33	77,06	152,33	6,36	511,23	77,09	362,66	572,69	534,52
1732	528,40	76,12	150,66	6,31	508,61	77,16	366,63	566,89	532,67
1733	523,50	76,75	149,76	6,21	505,96	77,04	370,38	561,05	531,05
1734	520,32	76,77	149,14	6,11	503,43	76,99	374,04	553,89	529,11
1735	517,03	76,56	147,88	6,01	501,09	76,84	377,81	547,99	527,45
1736	514,06	77,00	147,87	5,91	497,73	76,66	381,49	541,25	525,95
1737	511,50	77,05	146,96	5,86	494,73	76,69	385,01	538,20	524,60
1738	508,69	76,96	145,56	5,76	491,96	76,54	388,45	533,60	523,10
1739	506,32	77,11	145,63	5,66	488,89	76,57	391,97	529,41	521,37
1740	503,33	76,91	145,15	5,61	486,16	76,53	395,48	525,15	519,81
1741	500,95	77,02	144,33	5,51	483,28	76,54	398,83	521,85	518,63
1742	498,08	76,68	143,91	5,41	480,81	76,47	401,94	519,81	517,11
1743	494,82	75,64	142,48	5,36	478,20	76,34	405,19	517,21	515,91
1744	493,05	75,62	142,26	5,26	476,28	76,49	408,26	513,74	514,41
1745	491,47	76,42	141,44	5,21	473,74	76,38	411,36	510,18	512,99
1746	488,92	76,27	141,59	5,11	471,63	76,34	414,17	508,23	511,93
1747	482,90	76,60	140,60	5,01	469,13	76,34	417,01	505,48	510,49
1748	480,75	76,47	140,22	4,96	466,94	76,21	419,62	503,98	508,65
1749	476,75	76,43	139,45	4,86	465,18	76,21	422,09	502,05	507,42
1750	474,29	76,65	138,72	4,81	463,02	76,22	424,81	498,05	505,48
1751	470,98	76,33	138,28	4,71	461,07	76,13	427,09	495,43	503,73
1752	470,17	76,16	137,53	4,66	459,30	76,17	429,50	491,80	502,00
1753	468,02	76,26	137,47	4,61	457,60	76,11	431,99	489,22	500,51
1754	467,87	76,41	136,86	4,51	455,76	76,00	434,26	486,23	498,38
1755	465,08	76,37	136,38	4,46	454,33	75,89	436,49	483,82	497,04
1756	462,16	76,38	135,87	4,41	452,99	75,90	438,61	480,28	495,21
1757	459,72	76,25	135,25	4,31	451,41	75,76	440,79	477,61	493,71
1758	458,28	76,19	134,56	4,26	450,02	75,71	442,75	475,38	492,01
1759	456,72	76,41	134,19	4,21	448,73	75,75	444,69	472,85	490,26
1760	453,45	75,34	133,91	4,16	447,53	75,76	446,60	469,87	488,75
1761	450,66	75,67	133,00	4,06	446,18	75,70	448,86	466,80	486,92
1762	447,79	76,26	132,74	4,01	444,83	75,62	450,51	464,67	485,75
1763	448,77	75,72	132,82	3,96	443,16	75,65	452,38	461,46	483,98
1764	449,76	75,53	132,64	3,91	441,55	75,69	454,30	457,96	482,52
1765	449,84	75,18	132,28	3,81	440,60	75,60	456,09	456,50	481,09
1766	448,27	76,10	131,71	3,76	438,79	75,67	457,81	454,12	479,51
1767	446,24	75,40	131,98	3,71	438,15	75,59	459,21	452,78	478,47
1768	444,18	75,64	130,90	3,66	436,23	75,66	460,82	451,28	477,28
1769	441,00	75,67	130,38	3,56	435,66	75,62	462,62	448,96	476,42
1770	438,41	75,84	130,05	3,51	434,23	77,56	463,72	447,13	475,05
1771	425,60	75,91	149,46	3,46	433,15	78,06	465,17	443,18	474,02
1772	461,93	75,82	138,40	3,36	432,88	78,29	467,08	449,24	472,90
1773	470,76	75,97	137,39	3,29	434,01	78,46	468,41	455,79	472,26
1774	474,94	74,83	137,14	3,21	434,45	78,65	469,56	461,51	471,80
1775	476,40	75,05	137,64	3,16	436,32	78,81	470,52	467,51	471,92
1776	477,64	75,29	137,34	3,06	438,33	78,80	471,18	472,77	472,02
1777	477,34	75,76	137,21	3,01	439,85	79,09	471,70	475,11	472,73
1778	477,73	75,94	137,28	2,96	442,52	79,30	472,27	478,03	473,78
1779	476,43	75,36	136,47	2,91	443,59	80,22	472,23	479,98	474,22
1780	477,21	75,19	136,46	2,81	445,08	80,55	472,47	479,68	475,30
1781	477,13	75,89	136,68	2,76	446,90	80,69	472,61	480,94	476,02
1782	476,40	76,07	136,74	2,71	448,24	80,86	472,60	480,37	477,02
1783	475,24	76,06	136,76	2,66	449,92	80,96	472,26	480,89	477,58
1784	474,32	75,57	136,06	2,61	450,32	80,90	472,13	480,44	478,18
1785	474,10	75,99	136,34	2,56	451,36	81,07	472,07	479,89	478,99
1786	471,82	75,38	135,95	2,51	451,98	81,07	472,15	479,38	479,48
1787	473,12	75,44	135,63	2,46	453,23	81,11	472,40	478,16	479,99
1788	473,09	76,00	135,68	2,41	453,32	81,08	472,63	477,85	480,37
1789	472,73	75,90	135,84	2,36	454,30	81,27	472,99	476,84	480,97
1790	471,58	75,20	135,01	2,31	453,92	81,33	473,18	475,01	480,78
1791	472,54	75,65	135,66	2,26	454,59	81,39	473,57	476,08	481,51
1792	470,59	75,96	135,35	2,16	455,70	81,46	474,19	475,23	481,87
1793	469,48	75,61	135,04	2,16	455,85	81,47	474,71	474,63	482,32
1794	468,73	76,21	135,08	2,11	456,18	81,40	475,35	472,74	482,51
1795	376,53	75,77	202,27	14,37	457,16	79,31	476,80	456,82	482,63
1796	402,15	76,11	239,71	16,41	456,48	79,11	478,31	440,13	481,08
1797	422,91	76,04	167,67	16,25	454,90	78,95	479,40	433,35	478,53
1798	557,21	76,11	169,84	15,97	453,73	78,94	480,44	456,84	475,69
1799	630,00	76,23	176,85	15,67	452,89	79,50	481,59	507,20	474,03
1800	651,46	76,10	181,09	15,42	451,80	78,76	482,54	553,96	474,00
1801	663,60	75,79	184,52	15,17	452,13	78,83	483,36	592,52	475,44

1802	677,49	75,94	187,02	14,87	451,70	78,92	483,75	628,35	477,56
1803	676,39	76,54	189,43	14,57	453,72	79,10	483,79	656,37	480,70
1804	677,63	76,27	190,23	14,32	455,99	78,96	483,35	678,63	484,49
1805	680,92	77,00	190,33	14,07	459,06	79,10	482,75	694,64	488,78
1806	687,02	77,31	192,37	13,82	462,69	79,23	481,67	711,03	493,22
1807	693,98	77,59	193,67	13,51	466,55	79,20	480,35	725,05	497,36
1808	670,84	77,60	184,68	13,27	470,31	79,32	478,68	732,61	501,34
1809	618,96	77,79	166,93	13,06	474,46	79,48	476,78	731,18	505,23
1810	547,89	76,71	148,24	12,86	478,95	79,53	474,65	719,91	508,17
1811	507,27	77,44	139,71	12,71	481,30	79,62	472,31	703,43	509,73
1812	478,10	77,08	132,80	12,61	483,25	79,61	469,89	685,80	510,01
1813	458,73	77,40	128,65	12,51	483,73	79,69	467,24	668,93	508,42
1814	451,52	77,60	126,00	12,36	481,94	79,54	464,45	652,43	505,75
1815	443,49	77,54	123,35	12,26	479,89	79,40	461,61	637,84	502,32
1816	429,73	77,09	120,76	12,16	475,62	79,35	458,67	622,18	498,40
1817	417,61	77,46	119,57	12,06	472,02	79,25	455,60	607,33	493,99
1818	406,74	76,45	117,42	11,96	467,89	79,18	452,50	594,91	489,65
1819	397,97	76,28	116,10	11,86	463,61	79,07	449,25	583,36	485,40
1820	392,45	76,32	114,98	11,76	457,39	78,94	446,16	572,28	481,03
1821	388,61	76,34	114,49	11,66	453,19	78,81	442,79	562,99	476,76
1822	386,40	76,66	113,55	11,51	447,16	78,69	439,57	554,36	472,80
1823	386,49	76,46	112,78	11,41	441,76	78,51	436,19	548,65	468,57
1824	389,94	76,55	112,57	11,31	435,77	78,36	432,85	545,09	464,84
1825	394,67	75,87	112,01	11,21	431,68	78,18	429,52	543,11	460,95
1826	399,77	76,19	112,64	11,11	427,64	77,99	426,36	544,17	457,56
1827	401,84	76,18	113,08	10,96	424,27	78,06	423,01	549,37	454,24
1828	403,32	76,57	113,06	10,86	421,38	78,09	419,76	552,40	450,99
1829	403,12	75,96	112,47	10,76	419,32	78,06	416,55	555,91	448,02
1830	406,33	76,30	112,07	10,61	417,47	77,96	413,40	557,87	445,28
1831	407,22	76,28	112,48	10,51	416,30	77,97	410,15	560,67	442,61
1832	409,77	76,69	112,62	10,41	415,82	77,94	407,18	563,81	440,18
1833	415,32	76,65	113,02	10,26	415,75	77,85	404,05	570,94	437,63
1834	416,42	76,67	112,89	10,16	415,36	77,90	401,04	575,90	435,56
1835	413,51	76,55	112,47	10,06	416,20	77,90	398,09	579,26	433,74
1836	408,56	76,23	111,74	9,91	416,40	78,04	395,20	580,07	432,28
1837	406,34	76,61	111,58	9,81	417,23	78,03	392,25	580,10	431,09
1838	404,57	76,50	110,90	9,71	417,92	77,82	389,58	579,24	429,75
1839	404,04	76,20	110,65	9,61	418,73	77,91	386,73	577,47	428,39
1840	403,63	76,57	110,49	9,51	419,34	77,93	384,06	574,89	426,89
1841	404,80	76,59	110,68	9,41	419,92	77,90	381,44	574,09	425,37
1842	406,01	76,44	110,94	9,26	420,47	77,86	378,87	574,13	423,81
1843	407,77	76,39	111,19	9,16	421,32	77,93	376,32	578,30	422,42
1844	409,99	76,57	111,08	9,06	422,60	78,02	373,88	581,84	421,17
1845	413,51	76,68	111,42	8,91	423,86	78,08	371,60	582,25	420,26
1846	416,55	76,80	111,57	8,81	425,19	78,08	369,26	587,29	419,39
1847	420,24	76,69	112,08	8,66	426,55	78,21	366,98	591,03	418,81
1848	423,97	76,57	112,57	8,56	428,00	78,22	364,84	595,10	418,35
1849	427,83	76,44	112,26	8,41	430,42	78,21	362,82	599,27	418,21
1850	431,41	76,66	112,61	8,31	432,34	78,30	360,78	605,01	418,18
1851	432,67	75,52	112,15	8,16	433,95	78,31	358,79	609,11	418,32
1852	434,86	76,34	112,69	8,06	436,37	78,56	356,94	616,11	418,71
1853	438,41	76,52	113,09	7,91	438,20	78,68	355,10	619,01	419,17
1854	440,27	76,80	113,64	7,76	440,08	78,69	353,44	623,24	419,68
1855	442,45	76,92	113,96	7,61	442,10	78,76	351,67	627,71	420,49
1856	445,68	77,03	113,85	7,51	444,28	78,82	350,14	634,22	421,43
1857	448,14	76,92	114,26	7,36	445,99	78,79	348,53	638,54	422,48
1858	447,40	76,28	113,40	7,26	448,33	78,49	347,46	642,97	423,65
1859	446,69	76,47	113,68	7,11	450,67	78,41	346,46	646,14	424,96
1860	445,42	76,92	113,92	6,96	452,32	78,40	345,34	649,03	426,60
1861	442,78	76,95	113,82	6,81	454,20	78,38	344,40	649,42	428,35
1862	441,43	77,09	113,80	6,71	455,97	78,32	343,46	650,51	430,58
1863	439,60	76,61	113,61	6,56	458,08	78,26	342,66	649,31	432,62
1864	437,52	76,86	113,28	6,46	459,54	78,16	341,98	649,15	434,70
1865	434,56	77,11	112,96	6,31	460,77	78,19	341,20	647,44	436,69
1866	430,84	76,82	112,64	6,19	462,09	78,15	340,44	645,56	438,58
1867	427,60	77,16	112,33	6,06	462,99	78,15	339,69	645,18	440,41
1868	425,18	77,27	111,84	5,96	463,87	78,14	339,10	643,15	441,90
1869	421,88	77,11	111,46	5,86	464,30	78,10	338,55	640,61	443,19
1870	418,39	77,24	111,03	5,71	464,91	78,09	338,16	638,08	444,54
1871	416,71	77,21	110,52	5,61	464,99	78,16	337,76	637,65	445,50
1872	413,02	77,27	110,24	5,51	465,57	78,13	337,39	633,62	446,39
1873	410,49	77,25	109,91	5,41	465,86	78,14	337,06	630,73	447,49
1874	409,31	77,43	109,60	5,31	466,59	78,07	336,82	628,07	447,77
1875	407,32	77,00	109,11	5,21	466,79	77,98	336,55	628,42	448,32
1876	404,13	76,10	108,19	5,11	467,74	78,07	336,32	624,94	448,44
1877	399,27	77,03	107,84	5,01	468,39	78,24	336,27	621,11	448,54
1878	391,74	75,46	106,68	4,96	467,99	78,07	336,24	615,10	448,39
1879	385,05	76,21	106,75	4,86	468,39	77,86	336,09	608,60	448,00
1880	379,54	76,39	106,16	4,78	467,20	78,12	335,98	601,45	447,50
1881	374,25	76,26	105,71	4,71	466,40	78,12	335,87	595,41	446,87
1882	370,87	76,40	105,03	4,66	464,97	77,97	335,87	591,87	446,43
1883	368,75	76,23	105,00	4,56	462,37	77,86	336,02	587,16	445,86
1884	366,21	76,05	104,12	4,51	460,07	78,02	336,11	584,39	445,12
1885	363,58	75,78	103,88	4,41	457,87	78,01	336,35	581,58	444,46
1886	362,10	76,65	103,75	4,36	455,13	78,00	336,69	578,83	443,72
1887	361,00	76,74	103,62	4,26	452,68	77,93	337,00	576,45	443,10
1888	359,15	76,58	103,34	4,21	449,56	77,86	337,37	574,02	442,65
1889	356,62	76,62	102,76	4,16	446,71	77,81	337,75	571,58	441,95
1890	353,17	76,45	102,54	4,11	444,11	77,69	338,27	567,52	441,64
1891	348,68	75,71	101,90	4,01	441,89	77,43	338,75	562,44	441,05
1892	346,24	76,17	101,51	3,96	439,25	77,50	339,49	556,52	440,53
1893	343,19	76,34	101,10	3,91	437,39	77,59	340,13	550,10	439,78
1894	339,82	76,10	100,74	3,86	435,19	77,36	340,89	543,41	439,09
1895	337,99	76,45	100,23	3,81	432,78	77,38	341,69	537,11	438,62
1896	335,19	76,53	100,02	3,76	430,90	77,34	342,54	531,87	438,05

1897	331,27	76,55	99,73	3,71	428,75	77,22	343,43	526,14	437,12
1898	328,36	76,38	99,29	3,66	426,65	77,12	344,36	521,32	436,25
1899	326,34	76,19	98,83	3,61	424,60	77,02	345,34	515,34	435,59
1900	322,57	76,41	98,48	3,56	422,39	76,99	346,35	508,77	434,91
1901	318,72	76,24	98,05	3,56	420,65	76,96	347,43	502,54	434,09
1902	315,86	76,15	97,53	3,51	418,80	76,98	348,51	495,99	433,24
1903	311,58	76,16	97,40	3,46	416,61	76,86	349,53	489,82	432,40
1904	308,34	76,22	96,71	3,46	415,00	76,95	350,64	484,11	431,40
1905	305,93	75,76	96,29	3,41	413,15	76,62	351,72	478,96	430,44
1906	304,34	75,59	95,90	3,36	411,36	76,53	352,88	472,63	429,15
1907	301,90	75,40	95,71	3,36	409,45	76,49	354,15	468,16	428,04
1908	299,23	75,88	95,58	3,31	407,60	76,65	355,41	463,58	426,76
1909	296,99	76,04	95,37	3,26	406,33	76,70	356,59	458,53	425,37
1910	295,68	75,86	95,19	3,26	404,68	76,61	357,88	453,27	424,24
1911	293,34	75,88	94,86	3,21	403,29	76,62	359,16	449,31	423,03
1912	288,83	75,89	94,66	3,21	401,65	76,74	360,55	444,43	421,79
1913	284,54	75,90	94,51	3,16	400,39	76,62	361,87	439,24	420,65
1914	280,21	75,92	93,90	3,13	398,93	76,55	363,18	432,85	419,62
1915	275,43	75,76	93,61	3,11	397,60	76,53	364,53	426,92	418,53
1916	271,56	75,45	92,95	3,11	395,60	76,46	365,84	420,57	417,41
1917	269,74	75,61	92,64	3,06	394,13	76,48	367,21	414,34	416,23
1918	267,76	75,77	92,69	3,06	392,76	76,43	368,59	408,98	415,14
1919	266,09	74,98	92,29	3,01	390,60	76,28	369,93	403,70	414,27
1920	264,19	75,08	91,87	3,01	389,22	76,05	371,26	399,35	412,98
1921	262,89	75,30	91,48	3,01	387,42	76,08	372,46	394,74	411,95
1922	261,25	74,76	91,54	2,96	386,33	75,94	373,64	390,57	410,86
1923	260,09	75,42	91,32	2,96	384,53	75,96	374,88	387,16	409,86
1924	257,86	75,48	91,31	2,91	383,01	75,98	376,01	383,39	408,95
1925	255,98	75,42	91,32	2,91	380,95	75,88	377,14	379,71	407,87
1926	254,31	75,43	91,06	2,91	379,75	75,92	378,32	375,92	406,89
1927	252,74	75,75	90,95	2,86	378,12	75,92	379,54	373,15	406,02
1928	251,97	75,79	90,56	2,86	377,28	75,72	380,59	370,24	405,00
1929	251,17	74,81	90,31	2,86	375,67	75,76	381,61	367,44	404,02
1930	250,18	75,14	90,35	2,81	374,23	75,77	382,64	364,81	403,10
1931	249,84	75,06	90,25	2,81	372,55	75,66	383,72	362,85	402,20
1932	248,71	75,19	90,32	2,76	371,86	75,63	384,76	360,27	401,34
1933	247,18	74,85	89,99	2,76	369,88	75,67	385,76	357,86	400,38
1934	246,77	74,94	89,87	2,75	369,24	75,53	386,68	356,15	399,58
1935	246,57	74,94	89,70	2,71	368,16	75,35	387,70	354,80	398,73
1936	245,28	74,72	89,70	2,71	366,83	75,36	388,69	353,14	397,83
1937	244,44	74,89	89,56	2,66	365,91	75,36	389,65	351,12	396,86
1938	243,85	75,22	89,71	2,66	364,72	75,39	390,58	349,77	396,01
1939	243,46	75,08	89,58	2,66	363,81	75,42	391,61	348,44	395,35
1940	242,40	75,22	89,22	2,61	362,94	75,38	392,52	346,50	394,38
1941	241,31	75,24	89,32	2,61	361,95	75,48	393,52	345,39	393,65
1942	240,89	75,30	89,28	2,61	361,17	75,46	394,37	344,44	392,85
1943	240,53	75,23	88,96	2,56	360,57	75,41	395,33	343,15	392,12
1944	239,71	75,43	89,17	2,56	359,54	75,41	396,17	342,68	391,37
1945	238,82	75,18	89,10	2,53	358,48	75,41	397,06	341,49	390,63
1946	238,94	75,50	88,80	2,51	358,10	75,30	397,86	340,82	389,91
1947	238,95	75,45	88,94	2,51	357,24	75,24	398,68	339,73	389,20
1948	238,01	75,30	88,91	2,46	356,59	75,18	399,38	338,64	388,56
1949	238,28	75,51	88,84	2,46	355,72	75,20	400,11	338,73	387,89
1950	237,42	75,29	88,58	2,46	355,22	75,22	400,89	337,57	387,17
1951	236,65	75,06	88,53	2,41	354,70	75,18	401,49	336,28	386,62
1952	236,11	75,37	88,79	2,41	354,02	75,18	402,10	335,89	386,01
1953	235,82	75,45	88,69	2,41	353,71	75,20	402,81	334,99	385,26
1954	236,04	75,51	88,37	2,36	352,90	75,12	403,30	334,36	384,62
1955	235,72	75,00	88,43	2,36	352,55	74,95	403,86	333,86	383,96
1956	234,96	75,32	88,56	2,36	351,96	74,84	404,45	333,08	383,14
1957	234,36	75,18	88,41	2,31	351,17	74,95	404,90	331,71	382,43
1958	234,24	74,74	88,04	2,31	350,58	74,89	405,42	330,79	381,73
1959	233,61	75,07	87,80	2,31	350,58	74,88	406,02	330,55	380,97
1960	233,22	75,22	88,00	2,26	349,93	74,88	406,51	329,76	380,12
1961	232,92	75,19	88,22	2,26	349,40	74,92	406,94	329,55	379,41
1962	232,27	75,20	88,08	2,26	348,71	74,85	407,29	328,94	378,61
1963	231,80	75,32	88,02	2,21	348,11	74,85	407,75	327,96	377,82
1964	231,55	75,29	87,88	2,21	347,84	74,78	408,20	327,57	377,13
1965	230,30	74,62	87,61	2,21	347,32	74,80	408,65	327,30	376,35
1966	229,91	74,33	87,37	2,16	346,58	74,78	409,09	326,56	375,78
1967	229,38	75,11	87,66	2,16	346,82	74,82	409,45	326,13	374,96
1968	229,18	74,61	87,51	2,16	346,44	74,76	409,83	325,74	374,21
1969	228,57	74,94	87,54	2,11	345,91	74,76	410,23	325,45	373,51
1970	228,09	74,92	87,50	2,11	345,56	74,71	410,60	324,49	372,79
1971	227,32	75,23	87,46	2,11	344,87	74,75	411,04	324,46	372,09
1972	226,53	75,19	87,45	2,06	344,79	74,76	411,47	323,41	371,27
1973	226,90	74,84	87,43	2,06	344,22	74,74	411,82	323,55	370,60
1974	226,62	74,93	87,26	2,06	343,84	74,76	412,26	322,44	369,87
1975	226,29	74,63	87,16	2,01	343,77	74,75	412,73	322,12	369,17
1976	225,86	74,76	87,11	2,01	343,07	74,44	413,16	321,28	368,33
1977	225,27	74,31	87,23	1,96	342,54	74,53	413,52	320,07	367,71
1978	225,58	74,87	87,05	1,96	342,71	74,58	413,93	319,93	366,99
1979	225,23	74,80	87,17	1,96	342,18	74,53	414,35	319,50	366,30
1980	225,14	74,72	86,99	1,91	342,00	74,54	414,73	319,14	365,64
1981	225,02	74,33	86,93	1,91	341,52	74,51	415,04	318,95	365,07
1982	224,91	74,50	86,89	1,91	341,04	74,55	415,45	318,73	364,39
1983	224,63	74,67	87,01	1,86	341,09	74,55	415,79	318,16	363,80
1984	224,68	74,29	86,63	1,86	340,77	74,55	416,19	317,94	363,22
1985	224,65	74,63	86,83	1,82	340,23	74,46	416,55	317,13	362,75
1986	224,63	74,36	86,59	1,81	340,34	74,51	416,94	316,67	362,25
1987	224,40	74,50	86,78	1,81	340,01	74,45	417,23	317,03	361,58
1988	223,96	74,72	86,58	1,81	339,81	74,43	417,54	316,79	361,07
1989	223,80	74,77	86,72	1,76	339,32	74,47	417,92	316,20	360,55
1990	223,91	74,79	86,74	1,76	339,14	74,40	418,23	316,60	360,08
1991	224,01	74,78	86,51	1,76	338,59	74,36	418,54	316,21	359,66

1992	223,87	74,60	86,64	1,71	338,72	74,31	418,91	315,59	359,23
1993	225,07	74,28	86,80	1,71	338,39	74,41	419,27	315,34	358,71
1994	225,55	74,57	86,72	1,66	338,26	74,34	419,54	315,15	358,45
1995	225,60	74,55	86,70	1,66	338,19	74,34	419,94	314,76	358,16
1996	226,07	74,66	86,67	1,66	337,86	74,33	420,15	314,16	357,86
1997	225,43	74,26	86,37	1,61	337,65	74,25	420,47	313,98	357,64
1998	225,74	74,53	86,34	1,61	337,82	74,21	420,73	313,36	357,42
1999	225,23	74,32	86,59	1,61	337,19	74,18	420,99	313,49	357,06
2000	225,27	74,36	86,38	1,56	336,86	74,27	421,21	313,14	356,85
2001	225,45	74,32	86,47	1,56	336,67	74,19	421,46	312,79	356,63
2002	224,67	74,19	86,51	1,56	336,62	74,16	421,61	312,74	356,33
2003	224,61	74,03	86,37	1,51	336,36	74,22	421,81	312,26	356,03
2004	224,92	74,13	86,33	1,51	336,15	74,18	421,95	311,60	355,83
2005	224,58	74,23	86,35	1,51	335,88	74,17	422,06	311,96	355,60
2006	224,38	74,13	86,32	1,46	335,81	74,10	422,24	311,59	355,29
2007	224,60	73,70	86,16	1,46	335,74	74,15	422,36	311,33	355,13
2008	224,88	73,79	86,21	1,46	335,54	74,15	422,56	311,01	354,83
2009	224,51	73,65	86,33	1,41	335,43	74,15	422,71	311,16	354,58
2010	224,72	74,32	86,44	1,41	335,12	74,15	422,80	311,07	354,25
2011	223,96	74,17	86,12	1,36	335,23	74,08	422,80	311,09	354,14
2012	224,33	73,99	86,10	1,36	334,76	74,13	422,85	311,02	353,89
2013	223,62	74,14	86,24	1,36	335,21	74,06	423,01	311,19	353,66
2014	223,92	74,29	86,15	1,31	334,55	74,16	423,06	310,99	353,32
2015	223,64	73,72	85,94	1,31	334,36	74,22	423,24	310,79	353,19
2016	223,74	74,24	86,00	1,31	334,41	74,08	423,39	310,39	352,90
2017	223,42	74,08	85,90	1,26	334,30	74,20	423,51	309,90	352,74
2018	222,97	73,95	86,05	1,26	334,03	74,10	423,58	309,64	352,43
2019	223,00	74,32	85,97	1,26	334,23	74,11	423,78	309,45	352,23
2020	222,70	74,15	86,09	1,21	333,80	74,19	423,85	308,97	352,00
2021	221,08	74,10	85,81	1,21	333,74	74,15	424,05	308,33	351,72
2022	219,55	74,17	85,81	1,21	333,66	74,15	424,21	307,63	351,47
2023	218,62	74,23	85,87	1,16	333,84	74,07	424,25	307,45	351,12
2024	218,91	73,70	85,23	1,16	333,14	74,11	424,37	306,44	350,78
2025	218,38	73,69	85,49	1,16	333,45	74,13	424,49	305,81	350,50
2026	218,13	73,95	85,64	1,11	333,06	74,19	424,63	304,86	350,07
2027	217,32	74,28	85,60	1,11	332,90	74,18	424,77	303,89	349,64
2028	216,39	74,30	85,62	1,11	332,42	74,13	424,80	303,28	349,25
2029	215,72	74,04	85,50	1,06	332,46	74,14	424,91	302,02	348,90
2030	214,88	74,24	85,51	1,06	332,09	74,17	425,00	301,07	348,42
2031	214,65	73,95	85,29	1,06	331,77	74,14	425,08	300,05	347,94
2032	214,45	73,99	85,15	1,01	331,42	73,86	425,22	299,16	347,63
2033	213,22	73,39	84,98	1,01	330,88	73,48	425,21	298,65	347,08
2034	212,35	73,27	84,71	1,01	330,47	73,55	425,34	297,88	346,52
2035	213,62	64,26	83,86	0,96	329,65	71,28	425,33	297,01	345,66
2036	213,49	67,32	83,26	0,96	328,27	70,40	425,12	295,87	344,45
2037	213,01	68,85	83,35	0,96	327,22	70,35	425,08	295,01	343,71
2038	211,98	69,59	83,54	0,96	327,08	70,55	425,05	294,19	343,00
2039	210,54	70,30	83,59	0,91	326,76	70,91	425,05	293,01	342,26
2040	210,11	70,85	83,78	0,91	325,87	71,13	425,04	292,36	341,58
2041	209,38	71,32	83,89	0,91	325,38	71,43	425,06	291,96	340,95
2042	208,85	71,52	83,68	0,86	325,03	71,60	425,09	291,04	340,30
2043	208,85	71,63	84,12	0,86	324,10	71,72	425,08	290,50	339,67
2044	208,45	72,12	84,94	0,86	323,83	71,14	425,19	290,24	339,34
2045	208,06	70,46	84,22	0,81	322,13	69,97	425,19	289,01	338,36
2046	207,27	71,24	84,38	0,81	321,54	70,21	425,02	288,09	337,76
2047	207,54	71,27	84,37	0,81	321,33	70,57	425,07	287,42	337,14
2048	206,60	71,61	84,29	0,81	320,95	70,88	425,03	286,68	336,52
2049	205,79	72,08	84,47	0,76	320,54	71,14	424,96	285,72	335,99
2050	206,12	72,20	84,34	0,76	319,95	71,34	424,97	285,46	335,43
2051	206,14	66,49	83,51	0,71	318,72	69,53	425,00	284,39	334,60
2052	206,28	68,11	83,11	0,71	317,96	69,12	424,78	283,32	333,79
2053	205,94	69,06	82,93	0,71	317,72	69,21	424,56	282,76	333,19
2054	205,06	69,44	82,93	0,71	316,99	69,56	424,49	282,12	332,48
2055	204,53	69,72	83,04	0,71	316,88	69,82	424,31	281,48	331,78
2056	203,85	70,48	83,01	0,66	316,20	70,19	424,14	281,36	331,16
2057	203,16	70,92	82,96	0,66	315,96	70,45	423,97	280,54	330,48
2058	202,63	71,26	83,08	0,66	315,29	70,69	423,76	280,00	329,82
2059	201,62	71,61	83,25	0,66	314,97	71,01	423,59	279,10	329,24
2060	201,20	71,79	83,06	0,61	314,24	71,19	423,38	277,96	328,67
2061	200,71	72,10	83,16	0,61	313,71	71,43	423,14	277,47	328,05
2062	200,62	72,20	83,09	0,61	313,11	71,49	422,94	277,04	327,48
2063	200,13	72,11	83,01	0,56	312,16	71,63	422,67	276,66	326,85
2064	199,74	72,15	82,78	0,56	311,94	71,78	422,41	275,56	326,28
2065	198,74	71,93	82,90	0,56	311,49	71,71	422,05	274,71	325,80
2066	197,83	72,36	82,85	0,52	310,80	71,88	421,82	274,00	325,23
2067	197,26	72,47	82,88	0,51	310,25	71,92	421,58	272,88	324,65
2068	196,47	72,55	82,98	0,51	309,52	71,95	421,22	272,21	324,17
2069	195,83	72,12	82,96	0,51	309,06	72,02	420,89	271,21	323,57
2070	195,14	72,35	82,92	0,51	308,21	72,02	420,51	270,29	322,97
2071	194,80	67,02	82,16	0,46	307,40	70,57	419,94	269,55	322,26
2072	194,62	67,68	81,44	0,46	305,74	69,80	419,38	268,16	321,22
2073	194,26	69,03	81,47	0,46	304,73	69,81	418,62	267,19	320,43
2074	193,42	69,49	81,65	0,46	304,46	69,96	417,90	266,16	319,52
2075	192,65	70,04	81,67	0,41	303,92	70,30	417,11	265,17	318,73
2076	192,44	70,42	81,81	0,41	303,43	70,50	416,27	264,14	317,76
2077	191,78	70,63	81,83	0,41	302,99	70,66	415,46	263,35	316,87
2078	191,62	70,92	81,66	0,41	302,09	70,75	414,56	262,17	316,01
2079	190,97	71,36	81,84	0,36	301,35	70,93	413,65	261,48	315,09
2080	190,34	71,21	81,80	0,36	300,75	70,97	412,74	260,77	314,14
2081	190,51	71,48	81,70	0,36	300,09	71,05	411,76	259,83	313,27
2082	190,16	71,45	81,83	0,36	299,76	71,13	410,87	259,18	312,41
2083	189,73	71,80	81,97	0,36	298,89	71,34	409,91	258,12	311,54
2084	189,45	71,69	81,56	0,31	298,79	71,32	409,00	257,84	310,71
2085	189,35	72,04	81,70	0,31	297,82	71,46	408,17	257,39	309,88
2086	188,92	72,02	81,72	0,31	297,54	71,52	407,24	256,39	309,04

2087	188,62	71,67	81,58	0,31	296,61	71,50	406,35	255,47	308,12
2088	188,47	71,76	81,37	0,26	296,26	71,85	405,52	255,14	307,33
2089	187,88	71,79	81,37	0,26	295,61	71,99	404,67	254,77	306,54
2090	187,44	72,07	81,12	0,26	294,81	72,11	403,91	254,09	305,55
2091	186,51	72,38	81,26	0,26	294,62	71,97	403,04	253,24	304,74
2092	185,97	72,21	81,14	0,21	294,24	72,06	402,33	252,70	303,77
2093	185,84	72,10	81,11	0,21	294,08	71,99	401,51	251,77	302,79
2094	184,83	71,92	81,26	0,21	293,53	72,10	400,68	251,12	301,81
2095	184,50	72,04	81,04	0,21	292,79	72,14	399,93	250,59	300,88
2096	184,51	71,91	81,02	0,21	292,55	72,14	399,10	250,09	299,84
2097	183,81	72,23	81,07	0,16	292,00	72,02	398,32	249,17	298,78
2098	183,46	72,04	81,01	0,16	291,59	72,13	397,50	248,47	297,72
2099	182,93	72,29	81,16	0,16	291,03	72,09	396,64	247,49	296,80
2100	182,57	71,96	81,21	0,16	290,49	72,15	395,86	246,98	295,76
2101	182,12	71,86	80,77	0,11	289,81	72,03	394,95	246,11	294,78
2102	182,03	71,74	80,88	0,11	289,17	72,04	394,16	245,78	293,81
2103	181,95	71,91	80,88	0,11	288,86	72,07	393,31	245,07	292,86
2104	181,09	72,07	80,72	0,11	288,36	72,01	392,48	244,63	291,94
2105	180,21	71,16	80,55	0,11	287,69	72,03	391,60	243,93	290,87
2106	180,08	71,21	80,61	0,06	287,34	71,85	390,79	243,80	289,84
2107	179,42	71,85	80,53	0,06	286,53	72,08	389,97	242,89	288,83
2108	178,70	71,83	80,75	0,06	286,02	72,02	389,20	242,44	287,89
2109	178,34	71,60	80,69	0,06	285,33	72,04	388,34	241,66	286,97
2110	178,50	71,84	80,63	0,06	284,64	72,04	387,52	241,15	285,98
2111	177,93	72,06	80,61	0,01	284,03	72,07	386,73	240,40	285,05
2112	177,28	72,13	80,58	0,01	283,35	71,97	385,93	240,03	284,12
2113	176,79	72,16	80,58	0,01	282,80	71,99	385,17	239,58	283,17
2114	176,87	72,04	80,53	0,01	282,11	71,99	384,41	238,89	282,31
2115	176,54	71,64	80,36	0,01	282,06	71,86	383,72	238,78	281,44
2116	176,57	71,80	80,44	0,01	280,88	72,00	382,92	238,05	280,45
2117	176,37	71,97	80,33	0,01	280,38	71,92	382,22	237,42	279,56
2118	176,08	72,08	80,37	0,01	279,74	71,88	381,51	237,12	278,72
2119	175,63	72,18	80,42	0,01	279,13	71,81	380,83	236,65	277,86
2120	175,42	71,98	80,28	0,01	278,61	71,80	380,08	236,25	276,95
2121	175,15	72,12	80,38	0,01	278,08	71,77	379,44	235,45	276,21
2122	174,92	72,18	80,23	0,01	277,51	71,75	378,74	235,09	275,43
2123	174,91	72,17	80,25	0,01	276,91	71,75	378,05	234,78	274,61
2124	174,53	72,14	80,23	0,01	276,54	71,73	377,38	234,28	273,82
2125	174,12	72,05	80,18	0,01	276,17	71,68	376,73	233,92	273,08
2126	174,02	72,19	80,08	0,00	275,59	71,70	376,06	233,41	272,39
2127	69,22	70,38	72,90	6,06	68,79	68,26	68,42	69,32	68,54
2128	127,75	70,42	85,19	5,96	68,96	68,35	68,44	75,48	68,90
2129	301,90	70,36	94,92	5,76	70,37	68,37	68,45	110,95	71,15
2130	458,16	70,39	112,61	5,51	73,63	68,39	68,46	181,09	77,42
2131	535,47	70,57	127,98	5,26	81,41	68,57	68,49	261,44	87,27
2132	616,11	70,79	145,45	4,96	93,28	68,62	68,48	353,77	102,29
2133	656,05	70,95	157,79	4,66	108,83	68,82	68,61	434,77	117,51
2134	688,82	71,24	169,17	4,31	126,60	68,83	68,78	512,99	133,12
2135	665,45	71,51	170,46	4,01	146,09	69,01	69,08	566,34	149,76
2136	631,98	71,44	167,59	3,81	167,08	69,39	69,62	591,73	168,56
2137	611,73	71,43	164,28	3,61	187,80	69,49	70,49	602,60	188,35
2138	619,42	71,35	164,21	3,41	207,72	69,70	71,82	608,65	207,74
2139	615,34	71,70	163,89	3,21	226,54	69,92	73,73	613,53	226,59
2140	621,58	71,50	164,55	3,01	243,54	70,09	76,23	617,99	245,32
2141	613,68	71,98	163,88	2,81	258,73	70,20	79,43	619,58	263,59
2142	609,15	71,70	162,60	2,61	272,70	70,48	83,22	619,63	281,83
2143	621,42	71,79	164,00	2,41	285,92	70,74	87,58	622,75	299,47
2144	614,05	72,27	163,24	2,21	297,97	70,85	92,56	625,71	316,88
2145	631,77	72,48	281,46	16,42	309,77	71,21	97,97	625,99	334,21
2146	649,06	72,88	200,08	16,17	320,77	71,42	104,02	630,53	349,81
2147	660,25	72,47	189,28	15,92	330,73	71,14	110,50	640,39	363,72
2148	672,66	72,53	187,04	15,67	340,59	71,30	116,68	653,89	375,35
2149	688,87	72,49	188,23	15,42	349,33	71,34	122,75	670,84	386,05
2150	698,43	72,39	189,19	15,12	358,73	71,26	128,63	684,78	396,43
2151	711,46	72,62	191,44	14,82	368,21	71,61	134,32	698,95	406,09
2152	720,14	72,46	193,57	14,57	377,67	71,65	139,88	713,45	416,02
2153	728,11	72,55	195,32	14,27	386,92	71,99	145,17	726,87	425,62
2154	735,30	72,91	196,38	13,97	396,49	72,20	150,25	740,09	435,26
2155	739,50	73,37	197,31	13,67	405,71	72,24	155,08	751,52	444,96
2156	743,90	73,02	199,10	13,37	415,35	72,54	159,75	761,94	454,52
2157	744,39	73,32	199,84	13,02	424,14	72,62	164,28	770,95	464,30
2158	746,70	73,14	200,20	12,76	433,07	72,81	168,57	780,80	473,69
2159	743,64	73,59	199,96	12,47	441,44	73,05	172,49	788,63	482,97
2160	739,04	73,65	199,42	12,17	449,74	73,27	176,30	793,50	491,88
2161	737,77	73,70	199,17	11,87	457,43	73,49	180,24	798,89	500,77
2162	732,02	74,13	198,32	11,62	464,90	73,62	184,14	800,00	508,87
2163	730,09	73,96	197,50	11,31	472,17	73,76	188,31	802,78	517,00
2164	723,81	73,78	196,30	11,06	479,08	73,93	192,46	801,38	524,38
2165	715,02	73,68	194,45	10,76	485,43	74,05	196,84	798,17	531,42
2166	706,09	74,22	192,28	10,51	491,76	74,25	201,44	793,86	537,99
2167	699,07	74,84	189,51	10,26	498,14	74,60	206,06	787,57	543,97
2168	691,94	74,88	187,06	10,06	502,76	74,36	210,54	778,59	549,53
2169	683,83	74,65	184,74	9,81	507,59	74,40	215,00	769,19	554,61
2170	674,45	74,87	182,29	9,61	512,21	74,58	219,54	759,97	559,40
2171	668,56	74,40	180,20	9,36	516,07	75,74	224,14	749,69	563,70
2172	663,25	75,44	178,39	9,16	519,35	##########	228,97	740,27	566,65
2173	659,27	74,92	176,95	9,01	522,64	##########	233,79	732,09	570,33
2174	654,49	74,38	175,78	8,76	525,68	##########	238,88	725,13	572,72
2175	648,95	73,90	174,58	8,56	528,35	##########	244,05	718,61	575,78
2176	642,74	74,77	173,11	8,31	532,02	##########	249,17	712,25	577,86
2177	635,45	74,79	171,33	8,21	534,61	##########	254,41	705,99	579,60
2178	629,28	74,05	169,39	8,06	535,64	230,17	259,66	698,22	580,83
2179	621,09	74,58	167,70	7,86	537,42	231,23	264,88	690,34	582,71
2180	608,44	74,48	164,90	7,71	539,12	232,09	270,07	682,41	583,13
2181	601,00	74,63	163,29	7,56	540,39	233,09	275,27	673,57	583,26

2182	594,34	74,11	161,92	7,41	541,35	233,98	280,45	666,10	583,11
2183	587,58	74,59	160,40	7,26	542,03	235,11	285,64	658,36	581,91
2184	574,46	75,22	157,21	7,16	542,92	235,61	290,79	648,37	579,89
2185	561,91	74,89	154,23	7,06	543,24	236,09	296,03	637,49	576,94
2186	548,81	74,43	151,98	6,96	542,70	236,42	301,18	625,84	573,56
2187	539,88	74,38	149,73	6,86	541,30	236,64	306,25	614,31	569,43
2188	534,02	74,78	148,48	6,76	540,24	236,89	311,26	602,83	564,80
2189	528,32	74,77	147,22	6,66	538,11	236,42	316,17	591,31	559,92
2190	523,16	74,52	145,34	6,56	535,86	236,25	320,88	581,77	555,27
2191	518,93	74,30	144,38	6,46	533,90	235,54	325,50	573,04	550,24
2192	518,15	74,60	143,92	6,36	531,76	235,11	330,05	565,37	544,83
2193	519,93	74,36	144,05	6,26	529,73	234,54	334,47	560,27	539,93
2194	525,23	74,08	144,41	6,16	528,79	234,37	338,80	558,16	535,45
2195	532,65	74,55	145,25	6,01	527,65	234,29	343,10	560,20	531,08
2196	533,47	74,01	145,02	5,91	526,72	234,58	347,16	560,20	528,07
2197	529,26	74,26	144,30	5,81	525,84	234,88	351,20	560,84	525,19
2198	521,01	74,10	143,15	5,71	524,27	235,15	355,03	558,56	522,11
2199	512,75	74,38	141,42	5,66	522,73	235,63	358,92	553,92	518,93
2200	503,24	75,29	139,69	5,56	520,76	236,18	362,63	546,14	515,98
2201	496,20	74,83	138,25	5,51	518,52	236,57	366,34	537,03	513,05
2202	491,73	74,24	137,18	5,41	516,06	236,62	370,02	529,37	509,76
2203	484,42	74,37	136,22	5,36	512,84	236,87	373,68	520,38	506,33
2204	479,23	74,07	135,17	5,31	510,27	237,33	377,23	512,35	503,10
2205	475,20	74,20	134,32	5,21	507,32	237,87	381,05	505,62	499,39
2206	472,83	74,65	133,73	5,16	504,20	238,01	384,72	498,20	495,91
2207	471,01	74,48	133,20	5,11	501,64	238,72	388,51	492,91	492,37
2208	468,68	74,17	132,79	5,01	498,64	238,89	392,10	488,39	488,97
2209	461,25	73,95	131,61	4,96	496,18	239,09	395,36	483,09	485,64
2210	456,17	74,07	130,44	4,91	493,10	239,25	398,77	477,79	482,37
2211	451,32	74,71	129,36	4,86	490,80	239,88	402,02	471,00	479,42
2212	446,84	74,05	128,57	4,76	488,36	239,67	405,34	466,31	475,93
2213	442,76	73,83	127,67	4,71	485,75	239,15	408,36	460,40	472,81
2214	438,57	74,52	126,82	4,66	482,94	239,16	411,44	455,40	469,28
2215	435,42	73,89	126,42	4,61	481,26	238,84	414,27	450,18	465,99
2216	432,84	73,98	125,73	4,56	478,38	238,47	417,02	445,35	463,02
2217	428,64	74,28	124,94	4,51	475,58	238,05	419,60	441,69	460,05
2218	423,67	74,42	124,39	4,46	472,82	237,37	422,09	437,01	457,08
2219	422,14	73,97	123,76	4,41	470,33	236,81	424,40	434,31	454,11
2220	419,51	73,78	123,43	4,31	467,83	236,39	426,69	430,05	451,51
2221	420,94	74,27	123,00	4,26	465,47	235,88	429,03	427,11	448,91
2222	418,29	74,33	122,62	4,21	463,12	235,16	431,26	424,94	446,12
2223	413,76	74,24	122,10	4,16	460,96	234,47	433,35	421,76	443,68
2224	411,17	74,16	121,57	4,11	458,56	234,74	435,49	418,16	441,60
2225	408,45	74,12	121,01	4,06	455,68	234,26	437,34	415,23	439,18
2226	405,15	73,91	120,36	4,01	453,96	234,26	439,03	411,93	436,97
2227	404,38	74,28	120,32	3,96	451,52	234,17	440,77	409,49	434,80
2228	403,18	73,74	119,89	3,91	449,52	234,42	442,13	406,14	432,79
2229	399,05	74,10	119,57	3,81	447,41	234,00	443,45	403,69	430,91
2230	396,31	73,87	118,80	3,81	445,66	234,32	444,49	400,66	428,81
2231	395,14	73,61	118,81	3,71	443,58	234,89	445,31	397,83	426,65
2232	396,46	73,73	118,66	3,66	441,01	235,33	446,07	394,75	425,05
2233	395,59	73,92	118,27	3,61	438,97	235,50	446,63	391,64	423,54
2234	395,46	74,31	117,63	3,56	436,92	236,03	447,13	388,75	422,15
2235	395,40	73,74	117,20	3,51	435,38	236,11	447,48	385,57	420,84
2236	418,21	73,84	125,17	3,46	432,90	255,90	447,90	385,30	419,14
2237	447,22	73,48	125,32	3,36	431,52	285,50	448,24	395,15	418,67
2238	464,76	74,22	127,00	3,31	430,79	306,91	448,52	406,04	419,21
2239	476,32	73,91	128,65	3,21	430,35	323,19	448,28	418,02	420,47
2240	483,88	73,89	129,74	3,16	430,80	335,74	448,08	431,00	422,71
2241	487,51	74,31	130,35	3,06	431,77	346,31	447,71	441,60	425,67
2242	489,18	73,90	130,75	3,01	432,74	355,73	447,55	450,60	428,77
2243	487,90	73,83	131,02	2,91	434,09	363,69	447,25	457,35	432,20
2244	485,45	74,12	130,78	2,86	435,54	370,79	446,85	462,27	435,62
2245	482,90	73,64	130,57	2,81	436,93	377,01	446,80	466,10	438,96
2246	480,82	74,25	130,20	2,76	438,05	382,82	446,68	468,10	441,91
2247	477,79	74,36	130,30	2,66	439,11	388,03	446,71	469,65	444,58
2248	474,68	73,91	130,00	2,61	440,13	392,78	446,75	470,27	446,83
2249	471,09	73,98	129,51	2,56	441,07	396,80	446,94	470,06	448,97
2250	469,96	73,86	129,33	2,51	441,91	400,77	447,16	468,91	450,96
2251	468,10	73,74	128,68	2,46	442,36	404,07	447,49	467,42	452,64
2252	466,33	73,82	128,46	2,41	443,26	407,07	447,87	466,92	454,07
2253	466,31	73,93	128,36	2,36	443,60	410,35	448,38	465,66	455,32
2254	466,65	73,90	128,50	2,31	444,09	412,38	449,09	464,84	456,21
2255	461,91	73,90	127,80	2,26	445,17	414,47	449,86	463,44	457,21
2256	452,63	74,01	126,61	2,26	444,99	416,34	450,60	461,34	457,70
2257	443,23	74,15	125,32	2,21	445,20	417,73	451,35	457,83	457,99
2258	437,91	74,29	124,14	2,16	444,69	419,56	452,20	454,57	457,66
2259	432,88	74,31	123,58	2,16	444,32	420,22	453,01	449,53	457,26
2260	388,31	74,25	148,66	25,57	444,18	421,42	453,78	441,34	456,90
2261	308,50	74,90	175,78	16,47	443,35	422,05	455,77	416,60	455,76
2262	332,12	74,24	136,29	16,77	441,54	422,13	457,52	401,92	452,41
2263	359,88	74,65	153,10	16,67	438,20	421,15	459,09	391,44	447,91
2264	431,83	74,50	157,29	16,42	433,94	419,20	460,62	391,51	443,29
2265	376,64	73,93	132,67	16,32	429,98	416,15	462,20	386,03	439,14
2266	363,67	73,91	125,55	16,17	425,96	412,48	463,06	381,17	434,60
2267	368,25	73,83	122,91	16,02	420,76	408,11	463,99	380,04	429,47
2268	376,43	74,09	122,42	15,87	416,84	403,62	464,51	380,45	424,40
2269	527,65	73,75	139,97	15,57	413,90	399,88	464,61	409,21	419,77
2270	619,23	74,29	156,74	15,27	413,71	394,57	464,42	470,52	416,24
2271	647,49	74,11	165,35	14,97	413,59	391,26	463,85	532,33	414,19
2272	660,15	73,88	170,57	14,72	416,25	387,56	462,90	584,77	414,07
2273	664,74	74,21	173,82	14,42	420,07	384,38	461,52	624,90	415,87
2274	665,12	74,33	175,11	14,17	425,13	382,65	459,83	655,27	418,96
2275	642,43	74,33	166,79	13,92	430,83	381,68	457,81	674,82	423,18
2276	568,32	74,45	146,42	13,72	436,37	381,67	455,68	678,35	427,51

2277	509,55	74,30	132,82	13,57	441,71	381,61	453,25	667,76	431,75
2278	467,76	74,37	124,49	13,41	445,73	381,46	450,61	650,54	434,47
2279	429,54	74,42	118,18	13,31	447,10	381,65	447,78	628,57	435,77
2280	397,16	74,24	112,73	13,27	447,32	381,61	445,04	602,52	435,26
2281	375,80	74,31	110,05	13,16	445,84	381,18	442,15	577,32	433,34
2282	368,91	73,93	156,51	13,06	443,55	379,78	439,62	540,27	430,19
2283	506,57	74,15	160,50	12,86	438,77	378,55	436,67	527,88	426,23
2284	506,68	74,38	135,83	12,61	434,64	375,90	433,74	548,25	423,62
2285	488,14	74,25	126,75	12,41	430,89	373,71	430,67	572,20	422,17
2286	481,17	74,06	122,52	12,26	428,38	372,86	427,60	592,51	422,14
2287	474,90	74,17	120,43	12,06	427,10	371,49	424,37	604,46	423,17
2288	468,47	74,41	118,22	11,91	0,00	371,78	421,26	612,59	424,68
2289	460,18	74,13	116,46	11,71	425,37	371,61	418,18	616,72	426,53
2290	461,83	73,85	115,45	11,56	425,28	372,97	415,16	620,66	428,60
2291	461,03	73,84	114,64	11,41	424,92	373,97	412,28	623,21	430,73
2292	458,57	73,91	113,63	11,26	424,26	375,26	409,51	626,12	432,81
2293	454,11	73,81	112,73	11,11	423,66	376,32	406,77	626,65	435,17
2294	449,89	73,87	111,88	10,96	422,52	377,45	404,05	626,47	437,35
2295	444,14	73,64	111,08	10,81	421,50	378,65	401,71	624,15	439,41
2296	441,35	74,07	110,54	10,71	420,50	379,32	399,19	623,40	441,00
2297	439,18	74,03	110,31	10,56	419,24	379,95	396,82	622,01	442,26
2298	441,10	73,72	110,21	10,41	418,40	380,39	394,69	621,54	443,35
2299	445,28	73,86	110,83	10,26	418,42	381,58	392,57	627,17	444,01
2300	449,00	73,77	110,42	10,11	419,50	382,30	390,61	632,43	444,60
2301	443,63	74,34	109,81	9,96	421,79	383,05	388,68	629,24	445,28
2302	437,46	74,29	109,34	9,81	423,67	383,71	386,94	627,73	446,06
2303	436,30	73,78	109,04	9,66	426,22	384,59	385,18	624,29	447,15
2304	434,35	74,00	108,79	9,56	428,30	385,56	383,64	622,16	448,30
2305	432,75	74,30	108,61	9,41	430,64	386,54	382,12	620,23	449,30
2306	438,31	74,12	108,65	9,26	432,51	387,80	380,47	622,10	449,59
2307	447,54	73,78	109,44	9,11	434,35	388,31	379,07	623,70	449,53
2308	452,27	73,74	109,60	8,96	436,40	389,89	377,50	628,14	449,15
2309	452,93	73,75	109,70	8,81	438,79	390,96	376,10	632,15	448,66
2310	452,06	73,57	109,64	8,66	441,22	392,14	374,78	635,42	447,98
2311	452,60	73,80	109,55	8,56	443,43	393,72	373,44	638,27	447,53
2312	452,79	74,08	109,60	8,41	445,37	394,47	372,07	640,57	446,97
2313	451,33	73,98	109,65	8,26	447,43	395,79	370,90	641,53	446,63
2314	452,11	73,65	109,39	8,11	449,23	396,87	369,60	643,89	446,38
2315	451,58	74,02	109,50	7,96	451,34	398,22	368,48	644,71	446,43
2316	451,15	73,78	109,45	7,86	452,87	399,11	367,22	645,25	446,46
2317	451,68	74,36	109,44	7,71	454,21	400,51	366,20	645,93	446,61
2318	451,39	74,11	109,28	7,56	455,62	401,57	365,04	646,19	446,89
2319	452,02	74,11	109,19	7,41	457,21	402,61	363,85	646,01	447,22
2320	452,98	74,24	109,15	7,31	458,58	403,93	362,76	645,78	447,63
2321	453,81	73,55	109,27	7,16	460,39	404,67	361,61	646,34	447,98
2322	455,28	73,88	109,21	7,01	462,14	405,61	360,73	646,46	448,45
2323	457,87	73,82	109,36	6,86	463,75	406,64	359,75	648,04	448,94
2324	460,31	73,96	109,72	6,76	465,89	407,52	358,86	652,40	449,72
2325	462,72	74,16	109,72	6,61	467,38	408,72	358,04	655,87	450,28
2326	464,38	73,66	109,85	6,46	469,74	409,48	357,11	658,81	451,24
2327	463,63	74,31	109,67	6,31	471,32	411,08	356,30	664,44	451,89
2328	461,14	74,01	109,64	6,21	473,39	412,02	355,53	665,23	452,70
2329	458,47	74,13	109,30	6,06	474,55	413,04	354,79	666,18	453,45
2330	454,14	74,31	108,69	5,96	476,12	391,85	354,44	667,91	454,38
2331	446,29	74,59	108,33	5,86	476,09	344,83	354,60	663,61	455,82
2332	440,71	74,48	107,67	5,76	475,30	319,02	354,42	655,82	457,87
2333	435,85	73,93	107,07	5,61	473,64	301,95	354,26	646,67	460,38
2334	429,64	73,67	106,38	5,51	471,63	289,56	354,18	636,94	462,83
2335	422,12	74,08	105,73	5,41	468,85	280,47	353,86	626,54	465,22
2336	416,56	73,64	105,34	5,31	466,15	273,22	353,66	618,23	467,39
2337	414,23	74,13	104,67	5,21	463,16	267,61	353,39	609,76	469,51
2338	409,20	73,69	104,09	5,11	460,42	263,33	353,09	602,80	471,33
2339	403,09	73,81	103,13	5,06	457,44	259,84	352,86	595,71	472,78
2340	396,05	73,88	102,43	4,96	454,72	256,60	352,55	588,68	473,36
2341	388,64	73,88	101,93	4,91	452,42	254,21	352,43	579,81	473,82
2342	382,62	74,01	101,64	4,81	450,43	251,81	352,25	571,71	474,11
2343	377,84	73,47	101,16	4,71	448,31	249,64	352,11	564,02	474,12
2344	374,23	73,70	100,40	4,66	446,50	248,14	351,97	556,49	473,83
2345	368,41	73,43	99,61	4,61	444,30	246,45	351,89	549,59	473,15
2346	362,91	73,70	98,86	4,51	442,45	244,96	351,81	542,68	472,01
2347	357,99	73,76	98,50	4,46	440,42	243,67	351,86	535,40	470,77
2348	354,23	73,38	98,06	4,41	438,68	242,04	351,99	527,76	469,16
2349	350,24	73,77	97,74	4,36	436,17	240,93	352,05	520,36	467,37
2350	344,88	73,60	96,95	4,31	434,60	239,66	352,07	512,79	465,43
2351	338,48	73,59	96,55	4,26	432,18	238,11	352,03	504,49	462,96
2352	332,49	73,74	95,81	4,21	429,97	236,90	352,19	495,13	460,69
2353	327,73	73,56	95,59	4,16	427,96	235,51	352,23	487,86	457,92
2354	322,34	73,49	95,09	4,11	425,19	234,30	352,38	480,48	455,21
2355	317,95	73,20	94,47	4,06	422,96	233,11	352,62	473,71	452,39
2356	313,97	73,30	94,09	4,01	420,64	231,72	352,69	466,93	449,51
2357	310,09	73,96	93,77	3,96	418,45	230,83	352,84	461,11	446,52
2358	307,14	73,31	93,26	3,91	416,36	229,23	353,09	456,21	443,16
2359	304,06	73,22	92,86	3,86	413,98	228,38	353,30	451,06	440,18
2360	300,78	73,46	92,68	3,81	411,98	226,78	353,55	445,11	436,97
2361	295,41	73,44	92,09	3,81	409,66	225,63	353,89	439,27	434,06
2362	290,66	73,21	91,50	3,76	407,45	224,41	354,13	432,89	430,95
2363	287,07	73,28	90,98	3,71	404,89	222,90	354,51	425,82	427,95
2364	283,40	73,43	90,83	3,71	402,70	221,53	354,98	419,14	425,11
2365	280,07	72,93	90,41	3,66	400,31	220,35	355,19	412,50	422,11
2366	278,26	73,73	90,18	3,61	397,89	219,30	355,71	406,10	419,32
2367	275,49	73,19	89,79	3,61	395,20	217,82	356,05	400,39	416,58
2368	274,87	73,49	89,58	3,56	393,27	215,87	356,48	395,39	414,02
2369	273,05	73,48	89,37	3,51	390,58	214,31	356,77	389,58	411,69
2370	272,90	73,50	89,00	3,46	388,32	212,87	357,15	385,96	409,66
2371	271,67	73,48	88,80	3,46	385,78	211,49	357,55	382,05	407,89

2372	266,46	73,39	88,51	3,41	384,25	210,36	358,06	378,06	406,35
2373	259,09	73,29	87,99	3,41	382,01	208,98	358,39	372,49	404,44
2374	251,82	73,19	87,35	3,36	379,68	207,53	358,66	366,39	402,50
2375	248,64	73,61	87,06	3,36	378,59	205,88	359,11	359,85	400,13
2376	244,59	73,21	86,80	3,36	376,31	204,34	359,41	353,98	397,71
2377	240,99	73,50	86,24	3,31	375,04	203,17	359,75	348,86	395,07
2378	237,50	73,47	85,80	3,31	373,82	201,38	360,10	343,41	392,53
2379	235,08	73,12	85,47	3,26	370,67	199,68	360,26	338,48	389,88
2380	232,65	72,97	85,50	3,26	368,76	198,27	360,60	334,11	386,89
2381	230,87	73,36	85,01	3,26	367,35	197,05	360,76	329,46	384,18
2382	228,34	73,17	84,88	3,21	365,57	195,70	360,93	325,86	381,64
2383	226,33	73,04	84,77	3,21	364,32	194,38	361,28	321,72	379,08
2384	225,44	73,32	84,49	3,21	362,03	193,10	361,62	317,87	376,67
2385	223,28	73,08	84,24	3,16	360,72	191,85	361,92	314,93	374,23
2386	222,86	73,22	84,03	3,16	358,88	190,81	362,21	312,43	372,11
2387	221,05	72,67	84,09	3,16	357,95	189,60	362,53	309,92	369,74
2388	219,34	72,83	83,80	3,11	356,71	189,03	362,79	307,40	367,67
2389	218,55	72,85	83,51	3,11	355,29	187,84	362,93	305,31	365,81
2390	217,02	73,03	83,33	3,06	353,32	186,98	363,25	302,38	363,86
2391	215,75	72,95	83,40	3,06	352,60	186,28	363,51	300,54	361,93
2392	214,59	72,83	83,06	3,06	350,34	185,52	363,74	298,75	360,09
2393	214,02	72,92	82,81	3,01	349,76	184,86	364,14	296,51	358,38
2394	212,52	72,95	82,68	3,01	348,02	183,98	364,35	294,71	356,71
2395	212,20	72,65	82,61	3,01	346,91	183,33	364,48	293,20	355,15
2396	211,02	72,93	82,43	2,96	345,93	182,80	364,75	291,59	353,47
2397	210,11	72,55	82,25	2,96	344,56	182,33	365,02	290,11	352,25
2398	209,17	72,67	82,15	2,96	344,13	181,83	365,39	288,58	350,79
2399	208,41	72,76	82,18	2,91	342,69	181,42	365,61	287,47	349,51
2400	208,35	72,49	82,12	2,91	341,64	180,94	365,90	285,97	348,08
2401	207,57	72,44	81,82	2,91	339,96	180,24	366,00	284,79	346,93
2402	206,83	72,67	81,73	2,86	339,92	180,19	366,29	283,68	345,85
2403	207,03	72,54	81,78	2,86	338,04	179,59	366,46	282,77	344,52
2404	206,80	72,42	81,65	2,86	336,88	179,31	366,73	281,34	343,58
2405	205,79	72,54	81,47	2,81	337,01	178,96	367,03	280,03	342,62
2406	205,29	72,65	81,46	2,81	335,92	178,78	367,20	279,60	341,65
2407	205,29	72,50	81,45	2,81	335,11	178,53	367,49	278,52	340,76
2408	204,22	72,63	81,19	2,76	333,48	178,44	367,73	277,37	339,63
2409	204,39	72,51	81,22	2,76	333,31	177,99	367,86	276,55	338,88
2410	204,03	72,55	80,93	2,76	331,82	177,99	368,14	276,30	338,01
2411	203,87	72,40	80,99	2,71	332,10	177,52	368,38	275,53	337,32
2412	202,72	72,44	80,91	2,71	330,36	177,52	368,50	275,00	336,69
2413	202,28	72,46	80,89	2,71	329,75	177,58	368,68	274,11	335,91
2414	202,23	72,44	80,89	2,66	329,02	177,62	368,73	273,36	335,01
2415	201,17	72,44	80,89	2,66	328,18	177,57	368,86	272,35	333,96
2416	200,04	72,52	80,65	2,66	328,16	177,24	369,08	271,83	333,32
2417	200,33	72,60	80,66	2,61	327,59	177,36	369,26	270,71	332,43
2418	199,36	72,39	80,60	2,61	326,15	177,02	369,21	269,50	331,72
2419	199,02	72,29	80,54	2,61	325,85	176,96	369,40	268,62	330,62
2420	198,23	72,15	80,70	2,56	325,15	176,79	369,29	267,96	329,82
2421	198,08	72,28	80,70	2,56	324,88	176,47	369,57	266,95	328,82
2422	197,28	72,19	80,56	2,56	324,27	176,34	369,71	266,00	327,94
2423	196,77	72,04	80,62	2,51	323,73	176,13	369,72	265,07	327,27
2424	196,24	72,36	80,32	2,51	322,72	176,00	369,66	263,99	326,53
2425	195,81	72,47	80,38	2,51	322,33	176,00	369,69	263,40	325,82
2426	195,16	72,20	80,32	2,51	321,43	175,89	369,70	262,60	325,03
2427	194,05	72,09	80,40	2,46	320,68	175,82	369,60	261,64	324,37
2428	193,52	72,24	80,48	2,46	320,01	175,60	369,53	261,15	323,83
2429	193,37	72,27	80,40	2,46	319,39	175,41	369,46	260,71	323,15
2430	192,72	72,49	80,41	2,41	318,76	175,14	369,64	260,34	322,52
2431	192,27	72,48	80,25	2,41	318,41	175,26	369,52	259,58	321,97
2432	191,29	72,57	80,54	2,41	317,43	175,17	369,48	258,93	321,40
2433	191,73	72,57	80,39	2,36	317,08	175,28	369,48	258,52	320,84
2434	192,67	72,49	80,36	2,36	315,98	175,23	369,41	258,36	320,45
2435	192,89	72,30	80,41	2,36	315,22	175,34	369,28	258,01	319,95
2436	192,64	72,39	80,32	2,31	314,73	175,28	369,18	257,87	319,53
2437	192,16	72,45	80,53	2,31	313,96	175,31	369,04	256,73	319,17
2438	192,10	72,56	80,45	2,31	313,28	175,21	368,85	256,87	318,79
2439	191,60	72,58	80,22	2,31	312,83	175,06	368,69	255,68	318,52
2440	189,58	72,37	80,24	2,26	312,09	175,16	368,51	254,66	318,00
2441	188,05	72,39	80,15	2,26	310,91	174,79	368,22	253,57	317,36
2442	187,06	72,53	80,15	2,26	311,15	174,66	368,10	252,10	316,58
2443	186,08	72,59	80,24	2,26	309,84	174,82	367,89	251,21	315,77
2444	184,82	72,67	80,00	2,21	309,53	174,53	367,62	249,76	314,90
2445	184,19	72,64	80,00	2,21	308,49	174,49	367,34	248,40	314,00
2446	183,20	72,62	79,98	2,21	307,99	174,15	367,13	247,46	312,85
2447	182,59	72,73	80,06	2,21	307,61	174,26	366,79	245,97	311,93
2448	182,25	72,72	80,02	2,16	305,92	173,88	366,48	245,01	310,92
2449	181,99	72,64	79,93	2,16	305,33	173,75	366,18	244,03	309,86
2450	181,35	72,60	79,85	2,16	305,00	173,61	365,86	243,14	308,78
2451	180,82	72,66	79,84	2,16	303,73	173,32	365,42	241,91	307,70
2452	180,18	72,63	79,93	2,11	303,20	173,04	365,12	241,57	306,80
2453	180,10	72,63	79,73	2,11	301,81	172,72	364,77	240,65	305,77
2454	179,50	72,47	79,68	2,11	301,75	172,57	364,42	239,47	304,95
2455	178,94	72,44	79,63	2,11	300,38	172,47	363,98	239,40	303,92
2456	178,67	72,59	79,64	2,06	299,34	172,07	363,62	238,13	302,91
2457	177,75	72,60	79,51	2,06	298,23	171,65	363,24	237,52	302,05
2458	177,19	72,44	79,61	2,06	297,76	171,33	362,90	236,97	301,16
2459	177,05	72,50	79,43	2,06	297,67	171,13	362,52	235,90	300,35
2460	176,30	72,41	79,38	2,06	296,89	170,69	362,16	234,81	299,42
2461	175,78	72,33	79,21	2,01	296,06	170,27	361,80	234,09	298,61
2462	175,53	72,35	78,95	2,01	294,82	170,22	361,24	233,67	297,68
2463	175,38	72,31	78,97	2,01	294,14	169,81	360,69	232,58	296,94
2464	175,04	72,18	78,93	2,01	293,17	169,45	360,20	232,40	295,99
2465	174,23	72,34	79,01	1,96	292,54	169,10	359,93	231,44	295,24
2466	173,91	72,34	78,82	1,96	291,59	168,90	359,55	230,38	294,27

2467	173,69	72,31	78,87	1,96	290,76	168,64	358,96	229,24	293,34
2468	172,58	72,35	78,99	1,96	290,11	168,43	358,57	229,08	292,58
2469	171,61	72,37	78,88	1,96	288,64	168,04	357,95	228,32	291,67
2470	170,54	72,37	78,64	1,91	287,40	167,87	357,34	226,93	290,82
2471	170,04	72,41	78,75	1,91	287,32	167,39	357,00	226,22	290,01
2472	169,49	72,25	78,54	1,91	286,63	166,47	356,49	224,84	289,06
2473	169,00	72,23	78,57	1,91	285,86	166,19	355,97	223,85	288,31
2474	168,66	72,13	78,56	1,91	284,32	165,61	355,48	223,11	287,21
2475	168,16	72,00	78,40	1,86	284,11	164,98	354,74	222,12	286,39
2476	167,70	72,19	78,48	1,86	283,06	164,72	354,13	221,29	285,47
2477	167,36	71,95	78,44	1,86	282,29	163,98	353,42	220,12	284,63
2478	166,84	72,08	78,36	1,86	280,69	163,42	352,55	219,65	283,54
2479	166,17	72,10	78,23	1,86	280,24	163,16	351,92	218,54	282,70
2480	165,68	72,00	78,33	1,81	279,86	162,43	351,21	217,78	281,85
2481	165,46	72,02	78,23	1,81	279,15	161,94	350,38	216,80	280,97
2482	164,80	72,15	78,19	1,81	278,11	161,85	349,56	216,83	280,13
2483	164,26	72,03	77,99	1,81	277,53	161,23	348,74	215,59	279,31
2484	164,04	72,03	78,13	1,76	276,61	161,20	348,07	215,28	278,44
2485	163,66	72,02	77,99	1,76	276,12	160,59	347,34	214,33	277,66
2486	163,33	71,96	77,94	1,76	275,32	160,11	346,60	213,72	276,84
2487	162,94	72,01	77,90	1,76	274,15	160,36	345,84	213,17	275,99
2488	162,75	72,02	77,93	1,76	273,95	159,77	345,00	212,41	275,35
2489	162,24	72,13	77,89	1,76	272,91	159,68	344,39	211,62	274,51
2490	161,87	72,00	77,87	1,71	272,70	159,14	343,72	211,40	273,97
2491	161,49	71,91	77,73	1,71	271,68	159,02	343,19	211,09	273,26
2492	161,22	71,84	77,74	1,71	271,55	158,70	342,57	210,51	272,65
2493	160,99	71,80	77,62	1,71	270,85	158,12	341,95	209,94	272,01
2494	160,61	71,84	77,60	1,71	270,09	158,16	341,36	209,62	271,30
2495	160,18	71,87	77,69	1,66	269,65	157,95	340,70	208,97	270,75
2496	160,00	71,90	77,64	1,66	268,98	157,81	340,22	208,63	270,12
2497	159,82	71,89	77,61	1,66	268,50	157,61	339,59	207,91	269,52
2498	159,56	71,91	77,65	1,66	268,19	157,26	338,97	207,51	269,04
2499	159,18	71,94	77,50	1,61	267,45	157,18	338,45	207,42	268,50
2500	158,84	71,83	77,62	1,61	267,18	156,88	337,93	206,64	267,95
2501	158,45	71,93	77,44	1,61	265,73	156,92	337,21	206,61	267,19
2502	158,07	71,85	77,42	1,61	265,96	156,56	336,71	205,82	266,78
2503	157,81	71,84	77,46	1,61	265,38	156,26	336,13	205,63	266,27
2504	157,57	71,83	77,30	1,56	264,85	156,17	335,51	205,44	265,79
2505	157,55	71,73	77,38	1,56	264,55	155,89	334,93	204,86	265,34
2506	157,04	71,64	77,25	1,56	264,12	155,48	334,29	204,34	264,92
2507	157,03	71,66	77,15	1,56	263,75	155,38	333,81	204,28	264,48
2508	156,63	71,65	77,17	1,56	263,40	155,28	333,19	203,89	264,11
2509	156,35	71,77	76,95	1,51	262,44	155,27	332,64	203,53	263,61
2510	155,97	71,66	77,02	1,51	262,56	154,98	332,12	203,04	263,45
2511	155,87	71,56	76,82	1,51	262,25	154,75	331,59	202,86	263,04
2512	155,99	71,47	76,92	1,51	261,99	154,37	331,04	202,45	262,51
2513	155,42	71,41	76,91	1,51	261,70	154,13	330,45	201,81	262,08
2514	155,36	71,53	76,85	1,51	261,06	153,97	330,04	201,50	261,59
2515	155,56	71,44	76,72	1,46	260,90	154,20	329,53	201,41	261,12
2516	155,56	71,46	76,86	1,46	260,63	153,85	329,08	200,87	260,81
2517	155,52	71,38	76,77	1,46	260,33	153,90	328,56	200,58	260,34
2518	155,17	71,46	76,71	1,46	259,76	154,03	328,16	200,51	260,04
2519	155,22	71,52	76,68	1,41	259,82	153,93	327,66	200,12	259,74
2520	155,36	71,36	76,60	1,41	259,57	154,10	327,26	200,04	259,32
2521	155,54	71,29	76,68	1,41	259,46	153,47	326,78	199,63	259,02
2522	155,69	71,36	76,49	1,41	259,11	153,46	326,50	199,73	258,80
2523	155,45	71,29	76,53	1,41	259,03	153,36	326,18	199,28	258,38
2524	155,31	71,35	76,57	1,36	258,86	153,41	325,74	199,24	258,10
2525	155,48	71,25	76,48	1,36	258,63	153,56	325,44	199,42	257,74
2526	155,65	71,23	76,58	1,36	258,36	153,51	325,01	198,93	257,57
2527	155,58	71,28	76,64	1,36	258,19	153,29	324,85	199,11	257,37
2528	155,59	71,21	76,48	1,31	258,00	153,43	324,55	199,17	257,01
2529	155,29	71,15	76,41	1,31	257,87	153,33	324,21	198,86	256,79
2530	155,39	71,20	76,44	1,31	257,57	152,92	324,02	199,11	256,60
2531	155,40	71,32	76,51	1,31	257,57	153,09	323,67	198,92	256,31
2532	155,51	71,24	76,37	1,31	257,44	153,15	323,39	199,01	256,20
2533	156,00	71,24	76,30	1,26	257,37	153,07	323,17	198,88	256,15
2534	155,93	71,19	76,38	1,26	257,35	152,85	322,98	199,00	255,83
2535	155,93	71,23	76,44	1,26	257,23	152,92	322,73	198,89	255,83
2536	156,41	71,21	76,35	1,26	257,24	152,83	322,50	198,87	255,72
2537	156,29	71,04	76,35	1,26	256,70	152,88	322,34	199,09	255,51
2538	156,26	70,81	76,28	1,21	257,01	152,82	322,05	198,95	255,53
2539	156,55	70,91	76,15	1,21	256,92	152,89	321,88	199,00	255,51
2540	156,69	71,04	76,26	1,21	256,92	152,62	321,68	199,01	255,44
2541	156,65	70,99	76,22	1,21	256,81	152,40	321,50	199,16	255,44
2542	156,76	70,99	76,26	1,16	257,10	152,30	321,33	199,28	255,37
2543	157,00	70,93	76,21	1,16	256,86	152,62	321,08	199,48	255,32
2544	156,76	70,99	76,25	1,16	256,76	152,52	320,92	199,38	255,39
2545	156,97	70,97	76,12	1,16	256,84	152,45	320,77	199,41	255,32
2546	156,80	70,89	76,20	1,16	256,77	152,36	320,58	199,23	255,31
2547	156,78	70,86	76,18	1,11	256,79	152,11	320,50	199,63	255,34
2548	157,11	70,94	76,31	1,11	256,69	152,54	320,41	199,67	255,37
2549	157,25	70,94	76,17	1,11	256,52	152,33	320,27	199,74	255,39
2550	157,31	70,95	76,25	1,11	256,39	152,61	320,17	200,19	255,47
2551	157,28	70,93	76,25	1,06	256,33	152,54	320,13	199,91	255,48
2552	157,34	70,91	76,19	1,06	256,26	152,84	320,11	200,19	255,46
2553	157,56	70,95	76,07	1,06	256,00	152,84	319,98	200,33	255,55
2554	157,70	70,96	76,11	1,06	255,87	153,04	320,08	200,52	255,46
2555	157,82	70,98	76,13	1,01	255,72	153,02	319,94	200,65	255,62
2556	157,72	70,92	76,15	1,01	255,64	153,04	319,96	200,99	255,66
2557	157,95	70,75	76,08	1,01	255,62	153,16	319,89	201,17	255,70
2558	157,95	70,94	76,03	1,01	255,61	152,97	320,02	201,33	255,82
2559	158,14	70,84	76,07	0,96	255,62	153,19	320,04	201,19	255,80
2560	158,60	70,78	76,06	0,96	255,43	152,69	320,04	201,29	255,86
2561	158,22	70,76	76,02	0,96	255,62	152,55	320,08	201,77	255,85

2562	158,50	70,71	76,01	0,96	255,44	152,92	320,13	201,88	255,90
2563	158,84	70,88	76,01	0,96	255,46	153,08	320,18	202,20	255,94
2564	158,76	70,84	76,06	0,96	255,48	153,03	320,20	202,24	256,15
2565	158,63	70,68	75,96	0,91	255,29	153,06	320,21	202,39	256,18
2566	158,62	70,70	76,04	0,91	255,44	153,08	320,26	202,51	256,18
2567	158,56	70,68	75,99	0,91	255,40	153,02	320,41	202,78	256,18
2568	158,55	70,68	76,03	0,91	255,11	153,27	320,53	203,09	256,25
2569	158,34	70,59	76,00	0,86	255,23	153,50	320,59	203,06	256,46
2570	158,29	70,58	75,90	0,86	254,87	153,44	320,78	203,46	256,60
2571	158,13	70,67	76,01	0,86	254,84	153,50	320,86	203,53	256,65
2572	157,95	70,60	75,96	0,86	254,76	153,59	320,88	203,57	256,78
2573	158,35	70,54	75,81	0,86	254,50	153,52	321,10	203,84	256,92
2574	158,44	70,55	75,94	0,81	254,38	153,45	321,25	204,07	257,03
2575	158,21	70,52	75,87	0,81	254,14	153,39	321,27	204,09	257,21
2576	158,44	70,53	75,86	0,81	253,92	153,29	321,40	203,58	257,42
2577	158,12	70,57	76,01	0,81	253,62	153,11	321,53	203,67	257,60
2578	158,79	70,57	75,84	0,76	253,32	153,48	321,58	203,98	257,79
2579	159,18	70,59	75,96	0,76	253,03	153,44	321,69	203,65	257,94
2580	159,14	70,54	75,83	0,76	252,73	153,38	321,79	203,61	258,11
2581	159,86	70,38	75,88	0,76	252,44	153,78	321,77	203,81	258,23
2582	160,01	70,50	75,70	0,71	251,90	153,88	321,86	203,71	258,49
2583	160,02	70,51	75,93	0,71	251,59	153,94	321,88	204,05	258,73
2584	160,26	70,46	76,06	0,71	251,28	153,79	321,84	204,18	258,97
2585	160,33	70,54	75,91	0,71	250,87	154,22	321,90	204,43	259,10
2586	160,80	70,60	75,91	0,71	250,35	154,35	321,94	204,17	259,35
2587	160,73	70,64	75,80	0,66	250,00	154,49	321,89	204,25	259,46
2588	160,98	70,54	75,98	0,66	249,48	154,61	321,88	204,24	259,57
2589	161,13	70,43	75,87	0,66	249,16	154,60	321,83	204,23	259,86
2590	161,28	70,46	75,91	0,66	248,68	154,61	321,85	204,32	259,97
2591	161,39	70,45	75,99	0,61	248,33	154,44	321,85	204,12	260,15
2592	161,52	70,41	75,79	0,61	248,03	154,59	321,84	204,48	260,18
2593	161,45	70,44	75,79	0,61	247,62	154,63	321,76	204,10	260,20
2594	161,51	70,42	75,90	0,61	247,31	154,50	321,80	204,09	260,36
2595	161,33	70,36	75,82	0,61	246,83	154,53	321,65	203,99	260,46
2596	161,06	70,41	75,81	0,56	246,55	154,88	321,72	203,89	260,42
2597	160,61	70,29	75,75	0,56	246,06	154,40	321,68	203,58	260,48
2598	160,15	70,35	75,68	0,56	245,71	154,56	321,66	203,62	260,47
2599	160,14	70,36	75,71	0,56	245,29	154,85	321,65	203,55	260,54
2600	159,87	70,38	75,71	0,56	244,89	154,93	321,63	203,20	260,54
2601	159,71	70,27	75,79	0,51	244,42	154,67	321,68	203,28	260,56
2602	159,37	70,27	75,69	0,51	244,13	154,63	321,70	203,01	260,40
2603	159,12	70,29	75,58	0,51	243,72	154,78	321,62	202,86	260,34
2604	158,86	70,16	75,55	0,51	243,38	154,61	321,73	202,57	260,37
2605	159,33	70,28	75,43	0,46	242,95	154,88	321,75	202,51	260,27
2606	158,99	70,25	75,55	0,46	242,58	154,74	321,72	202,09	260,11
2607	158,70	70,31	75,70	0,46	242,10	154,64	321,72	202,25	260,20
2608	158,29	70,16	75,54	0,46	241,91	154,58	321,71	201,68	259,97
2609	158,07	70,12	75,33	0,46	241,52	154,48	321,58	201,58	259,73
2610	157,88	70,14	75,44	0,46	241,23	154,20	321,45	201,38	259,46
2611	157,76	70,19	75,41	0,41	240,82	154,54	321,42	201,18	259,35
2612	157,18	70,18	75,44	0,41	240,43	154,53	321,32	201,04	259,14
2613	157,04	70,12	75,53	0,41	240,17	154,43	321,22	200,83	258,82
2614	156,69	70,13	75,41	0,41	239,69	154,61	321,16	200,61	258,59
2615	156,44	70,10	75,39	0,41	239,35	154,48	321,01	200,19	258,21
2616	155,85	70,13	75,43	0,36	239,01	154,18	320,89	199,73	257,87
2617	155,46	70,20	75,25	0,36	238,64	154,27	320,73	199,51	257,44
2618	154,78	70,09	75,19	0,36	238,08	154,32	320,54	199,09	256,93
2619	154,79	70,06	75,14	0,36	237,86	154,11	320,32	198,89	256,62
2620	154,42	69,88	75,12	0,31	237,51	154,06	320,18	198,37	256,13
2621	154,31	69,95	74,97	0,31	236,43	154,18	319,90	197,94	255,62
2622	154,21	69,83	74,95	0,31	236,68	153,96	319,69	197,58	255,17
2623	153,65	69,84	75,03	0,31	236,22	153,48	319,57	197,35	254,69
2624	153,10	69,89	75,05	0,31	235,85	153,48	319,36	196,88	254,09
2625	152,77	69,77	75,10	0,31	235,44	153,14	319,20	196,13	253,56
2626	152,30	69,84	74,93	0,26	234,98	153,10	318,90	195,75	253,07
2627	152,15	69,87	74,91	0,26	234,58	153,10	318,66	195,54	252,55
2628	151,94	69,93	74,79	0,26	234,22	152,97	318,44	195,08	252,03
2629	151,70	69,88	74,69	0,26	233,72	152,75	318,23	194,87	251,54
2630	151,65	69,76	74,72	0,26	233,30	152,45	317,96	194,45	250,99
2631	151,01	69,81	74,78	0,26	233,00	151,95	317,71	193,84	250,33
2632	150,80	69,86	74,72	0,21	232,47	151,91	317,34	193,85	249,90
2633	150,29	69,76	74,63	0,21	231,97	151,53	317,07	193,00	249,30
2634	150,26	69,65	74,55	0,21	231,59	150,97	316,80	192,46	248,83
2635	149,95	69,66	74,58	0,21	231,11	150,51	316,46	192,17	248,29
2636	149,78	69,67	74,57	0,21	230,66	150,05	316,09	191,52	247,90
2637	149,54	69,55	74,56	0,21	230,06	149,55	315,80	191,21	247,50
2638	149,13	69,53	74,44	0,16	229,78	149,44	315,53	191,09	246,92
2639	148,90	69,62	74,50	0,16	229,35	149,10	315,17	190,42	246,55
2640	148,69	69,43	74,42	0,16	228,84	148,81	314,81	189,93	246,00
2641	148,72	69,49	74,36	0,16	228,47	148,53	314,53	189,60	245,62
2642	148,71	69,49	74,29	0,16	227,92	148,08	314,20	189,05	245,16
2643	148,53	69,45	74,32	0,16	227,46	147,62	313,85	189,13	244,65
2644	148,27	69,36	74,32	0,11	227,10	147,57	313,56	188,93	244,41
2645	148,13	69,37	74,18	0,11	226,61	147,19	313,18	188,43	243,90
2646	147,96	69,44	74,27	0,11	226,32	146,77	312,89	187,92	243,52
2647	147,81	69,90	74,22	0,11	225,19	146,65	312,57	187,68	242,96
2648	147,63	69,77	75,43	0,11	224,82	146,73	312,22	187,40	242,48
2649	147,17	69,88	77,82	0,11	224,94	146,80	311,93	187,27	242,08
2650	146,90	70,09	79,83	0,11	224,50	146,51	311,64	186,86	241,70
2651	146,66	70,44	80,89	0,06	223,76	146,33	311,32	186,54	241,26
2652	146,43	70,57	78,76	0,06	223,39	146,36	311,11	186,34	240,85
2653	146,50	70,63	78,04	0,06	223,34	146,12	310,82	186,22	240,57
2654	146,92	70,25	77,60	0,06	222,87	145,80	310,53	186,14	240,23
2655	147,06	70,68	77,10	0,06	222,77	145,54	310,24	186,06	239,93
2656	147,16	70,70	76,60	0,01	222,63	145,44	309,99	185,55	239,69

2657	146,88	70,59	76,25	0,01	222,20	145,14	309,80	185,48	239,42
2658	70,49	70,71	75,99	6,56	69,16	68,32	68,51	69,83	68,54
2659	85,53	70,99	78,06	6,51	69,23	68,32	68,53	71,16	68,63
2660	163,63	71,04	83,66	6,41	69,74	68,46	68,57	81,99	69,25
2661	309,43	71,04	94,90	6,26	71,09	69,05	68,56	122,27	72,10
2662	405,75	70,99	107,73	6,06	74,48	71,28	68,58	180,53	79,67
2663	451,19	71,17	116,71	5,86	80,77	75,81	68,63	234,42	89,22
2664	514,95	71,05	129,48	5,61	89,72	82,49	68,68	289,36	99,96
2665	567,68	71,35	141,18	5,40	101,14	91,13	68,75	343,47	114,00
2666	596,93	71,28	150,35	5,11	114,27	100,38	68,91	400,79	128,07
2667	604,40	71,79	155,47	4,86	130,65	110,05	69,17	452,31	144,01
2668	609,55	71,85	158,83	4,61	148,31	120,13	69,59	488,24	160,72
2669	605,98	71,93	161,28	4,39	165,44	130,35	70,21	518,89	177,74
2670	622,30	72,19	164,11	4,16	184,07	140,76	71,09	545,22	194,75
2671	625,07	72,42	166,70	3,91	203,25	150,53	72,27	569,99	211,36
2672	626,58	72,46	168,33	3,66	222,37	160,87	73,89	589,19	228,52
2673	611,63	72,47	166,22	3,46	241,21	171,47	75,98	600,52	245,31
2674	607,59	72,50	166,15	3,26	259,26	182,37	78,53	607,86	262,32
2675	597,32	72,37	164,05	3,06	275,55	193,07	81,64	611,84	279,07
2676	592,23	72,49	162,14	2,86	290,75	192,33	85,25	610,61	295,00
2677	584,80	72,65	159,92	2,71	304,42	181,26	89,35	607,58	310,56
2678	578,37	72,71	157,86	2,56	316,84	177,46	93,82	603,17	325,71
2679	571,66	72,53	157,06	2,41	327,93	176,36	98,59	596,34	339,95
2680	566,82	73,07	156,15	2,26	338,12	176,85	103,58	589,81	353,20
2681	564,85	72,91	253,03	11,16	347,37	178,68	108,90	579,42	365,61
2682	522,37	73,05	220,05	16,67	355,07	180,10	114,29	554,04	375,26
2683	520,62	72,74	177,15	16,49	361,55	181,67	120,00	541,13	382,20
2684	560,72	72,93	171,53	16,27	366,14	182,45	125,79	542,44	386,85
2685	578,70	72,74	170,01	16,07	370,39	183,69	131,73	551,92	389,18
2686	554,93	72,21	163,92	15,87	374,49	184,32	137,63	553,42	390,52
2687	574,70	73,05	164,79	15,67	378,66	184,26	143,34	555,47	391,74
2688	617,25	73,40	170,72	15,42	382,85	183,97	148,80	568,94	393,25
2689	639,19	73,02	175,56	15,17	386,48	184,19	154,04	589,63	396,13
2690	655,73	72,80	179,77	14,87	392,29	184,46	158,97	612,59	400,59
2691	673,70	72,92	183,33	14,62	397,37	184,82	163,54	635,57	406,26
2692	683,79	72,88	185,95	14,32	403,84	185,10	167,70	657,29	413,17
2693	690,69	72,92	187,80	14,07	409,91	186,18	171,50	674,43	421,00
2694	695,04	73,45	189,37	13,77	417,40	187,26	174,94	690,87	428,87
2695	697,85	73,76	190,40	13,47	424,72	188,35	178,14	705,35	437,17
2696	700,22	73,67	190,84	13,22	432,05	189,72	181,41	717,51	445,22
2697	698,07	73,72	191,42	12,96	439,91	190,92	184,78	726,33	453,03
2698	694,99	73,97	191,10	12,71	447,46	192,85	188,13	734,08	460,87
2699	692,14	73,08	190,61	12,46	455,44	194,50	191,55	737,93	468,06
2700	690,69	73,74	189,96	12,22	461,44	196,33	195,10	741,83	474,77
2701	684,52	73,65	189,33	11,96	468,45	197,78	198,49	743,58	481,10
2702	679,95	73,89	188,30	11,71	475,18	199,94	201,81	743,29	487,25
2703	677,14	74,05	187,24	11,46	482,59	201,53	205,14	742,08	493,34
2704	672,65	74,31	186,38	11,21	488,36	203,28	208,41	739,50	498,36
2705	668,38	74,39	185,51	11,01	493,83	204,76	211,75	737,26	503,40
2706	664,68	74,17	184,45	10,76	499,51	206,18	215,07	736,30	508,21
2707	660,59	73,80	183,41	10,54	505,20	207,67	218,41	733,20	512,65
2708	661,23	74,45	182,97	10,31	510,23	209,08	221,70	731,59	516,97
2709	657,57	74,62	181,54	10,11	515,52	210,71	224,93	730,34	520,79
2710	656,20	73,95	181,15	9,86	519,87	212,17	228,20	727,70	524,34
2711	653,62	74,28	180,08	9,66	524,67	213,22	231,40	723,98	528,14
2712	653,50	74,63	179,87	9,46	529,23	214,73	234,60	723,11	531,47
2713	654,07	73,87	179,18	9,26	533,42	216,38	237,87	721,86	535,10
2714	652,09	74,61	178,75	9,01	537,60	217,53	241,15	720,50	538,37
2715	652,75	74,90	178,35	8,81	541,61	218,92	244,42	720,08	541,94
2716	650,90	74,81	178,06	8,61	545,54	220,36	247,70	720,27	545,26
2717	648,21	74,55	177,41	8,41	549,86	222,17	251,06	717,93	548,91
2718	647,46	75,14	176,72	8,21	553,23	223,69	254,44	717,26	552,60
2719	636,92	75,27	175,05	8,06	556,81	225,56	257,79	716,95	556,99
2720	624,50	74,65	171,39	7,91	560,23	226,83	261,21	707,87	560,63
2721	605,14	74,40	166,73	7,76	562,60	228,33	264,65	692,70	564,09
2722	587,70	74,66	162,82	7,66	563,07	229,45	268,06	673,47	566,25
2723	573,40	75,05	159,30	7,56	562,26	230,60	271,59	654,69	567,34
2724	560,99	75,77	156,68	7,46	561,82	230,81	275,08	635,45	567,20
2725	550,08	75,49	154,10	7,36	559,41	230,75	278,66	617,30	565,64
2726	538,41	75,16	151,41	7,31	555,38	230,48	282,03	602,24	563,27
2727	528,17	74,71	149,36	7,21	551,87	230,04	285,61	587,11	559,95
2728	518,81	74,35	147,44	7,11	547,65	229,19	289,18	572,85	555,68
2729	510,39	74,18	145,65	7,06	543,59	228,42	292,74	559,42	550,90
2730	504,15	73,94	144,24	6,96	539,70	227,46	296,14	546,82	545,62
2731	498,28	74,48	142,80	6,91	535,26	226,52	299,72	535,63	540,21
2732	493,95	74,70	141,70	6,81	530,79	225,27	303,22	525,65	534,80
2733	488,11	74,18	140,79	6,76	526,63	224,45	306,70	515,57	529,37
2734	485,83	74,39	139,77	6,66	522,32	223,46	310,16	508,69	524,33
2735	485,23	74,32	139,54	6,56	518,38	222,66	313,58	502,57	519,51
2736	485,40	74,68	139,28	6,51	515,25	221,89	317,01	498,80	514,90
2737	484,61	74,66	138,90	6,41	512,05	221,03	320,28	495,18	510,79
2738	485,31	74,74	138,13	6,31	510,33	220,64	323,60	492,33	506,77
2739	480,54	74,75	137,10	6,26	507,42	220,47	326,84	487,78	503,05
2740	475,31	73,98	136,00	6,21	504,85	220,20	330,16	483,39	499,32
2741	466,26	74,90	134,45	6,11	502,34	220,08	333,30	478,05	495,60
2742	462,51	74,51	133,84	6,06	499,47	219,75	336,44	473,35	491,99
2743	460,12	74,49	133,33	5,96	496,91	219,45	339,74	469,72	488,31
2744	456,43	73,82	132,67	5,91	494,46	218,94	342,75	466,64	484,55
2745	453,52	74,28	131,98	5,86	491,15	218,59	345,77	462,48	480,73
2746	448,97	74,54	131,11	5,81	488,62	218,39	348,74	458,80	476,93
2747	445,56	73,55	130,48	5,71	485,45	218,45	351,65	455,58	473,57
2748	441,02	73,83	129,22	5,66	482,98	218,00	354,61	452,25	470,00
2749	435,29	74,04	128,41	5,61	481,96	217,99	357,83	448,26	466,37
2750	430,56	73,93	127,90	5,56	478,16	218,34	360,82	444,90	462,98
2751	426,26	74,08	126,89	5,51	475,33	218,40	363,72	440,83	459,69

2752	422,15	73,94	125,82	5,46	473,97	217,65	366,85	436,16	456,38
2753	417,56	74,28	125,07	5,41	469,67	217,28	369,93	431,70	453,35
2754	416,46	74,13	124,59	5,31	466,86	216,71	373,61	427,91	449,89
2755	415,49	73,82	123,82	5,26	463,27	215,96	376,87	424,69	446,81
2756	411,33	74,02	123,26	5,21	461,77	214,91	380,05	420,56	443,62
2757	408,31	73,85	122,72	5,16	458,35	213,47	383,17	416,35	440,45
2758	405,39	74,15	122,54	5,11	455,78	212,07	385,90	412,43	437,41
2759	398,32	74,01	121,18	5,06	452,10	211,06	388,50	407,68	434,32
2760	393,34	74,01	120,33	5,01	449,53	209,67	390,95	403,24	431,34
2761	387,68	74,06	119,31	4,96	448,22	208,47	393,55	397,52	428,20
2762	387,28	74,01	118,98	4,91	443,28	207,10	395,75	391,88	425,29
2763	384,73	73,82	118,04	4,86	441,29	205,62	398,03	387,24	422,22
2764	380,38	73,82	117,45	4,81	437,68	204,75	400,04	383,07	419,32
2765	375,18	74,07	116,74	4,76	435,09	203,67	401,87	378,62	416,56
2766	369,45	73,77	116,16	4,71	432,82	202,79	403,71	373,01	413,81
2767	364,79	73,80	114,99	4,66	430,99	202,02	405,51	368,13	411,45
2768	362,75	73,65	114,52	4,66	426,67	201,28	406,73	364,10	408,73
2769	362,07	73,80	114,04	4,61	423,66	200,67	408,23	359,75	406,18
2770	362,66	73,58	113,67	4,56	422,82	199,60	409,85	356,56	403,63
2771	362,05	73,40	113,57	4,51	419,53	199,28	410,98	354,05	401,04
2772	361,84	73,66	113,33	4,46	417,96	198,81	412,19	351,51	398,89
2773	360,65	73,27	113,33	4,41	415,90	198,09	413,26	349,67	396,54
2774	360,64	73,19	112,65	4,36	411,62	198,19	414,17	347,76	394,23
2775	360,44	73,50	112,62	4,31	409,79	198,01	415,09	346,11	392,16
2776	359,32	73,29	112,16	4,26	409,00	197,67	416,17	344,52	390,50
2777	360,38	73,32	112,26	4,21	406,68	197,60	417,05	343,47	388,60
2778	360,75	73,22	112,48	4,16	406,69	196,93	418,17	342,26	387,06
2779	360,24	72,94	112,37	4,11	405,31	196,89	418,99	341,47	385,38
2780	357,31	72,80	111,90	4,06	403,58	196,83	419,86	339,87	383,76
2781	355,36	73,05	111,45	4,01	401,88	196,89	420,46	338,28	382,34
2782	354,45	72,63	111,13	4,01	400,18	196,64	421,33	336,75	381,01
2783	354,53	72,84	110,97	3,96	398,37	197,00	421,88	335,64	379,74
2784	353,18	72,63	110,88	3,91	397,37	197,12	422,45	333,85	378,47
2785	353,84	72,79	110,53	3,86	395,31	197,23	422,67	333,74	377,34
2786	354,74	72,53	110,63	3,81	393,35	197,29	423,07	333,37	376,31
2787	355,13	72,65	110,33	3,76	391,08	197,69	423,06	332,82	375,22
2788	354,91	72,49	110,39	3,71	390,04	197,92	423,20	332,95	374,33
2789	354,95	72,28	110,26	3,66	387,35	198,46	423,01	332,95	373,27
2790	355,50	72,44	110,09	3,61	386,54	198,88	423,01	332,27	372,48
2791	356,53	72,45	110,15	3,56	385,00	199,52	422,78	333,59	371,86
2792	357,43	72,49	110,33	3,51	383,45	200,22	422,55	333,38	371,12
2793	364,45	72,45	111,10	3,46	382,45	200,58	422,50	334,52	370,63
2794	368,88	72,20	111,76	3,41	380,80	201,31	422,20	336,39	370,79
2795	371,43	72,17	111,78	3,36	378,23	201,71	422,07	339,07	371,57
2796	373,90	72,46	112,07	3,31	376,97	202,54	421,82	341,07	372,37
2797	375,90	72,60	112,94	3,31	376,74	226,13	421,58	343,99	373,60
2798	464,15	72,23	133,33	3,11	376,38	250,79	421,42	364,56	374,97
2799	519,41	72,46	136,68	2,96	377,11	269,85	421,64	404,44	378,26
2800	535,74	72,61	139,57	2,86	382,65	285,70	421,86	443,97	383,45
2801	537,35	72,68	140,50	2,71	386,33	299,44	422,08	473,99	389,51
2802	534,66	72,61	140,86	2,61	393,41	312,02	422,28	496,74	396,87
2803	531,44	72,91	140,46	2,51	400,38	323,89	422,33	509,40	404,32
2804	523,33	72,73	139,03	2,46	407,05	334,61	422,32	514,22	411,46
2805	510,46	72,60	137,21	2,41	412,35	345,16	422,25	517,24	417,50
2806	488,82	72,98	134,36	2,36	418,29	354,76	422,20	512,62	423,23
2807	476,36	73,10	132,13	2,31	423,09	362,93	422,11	504,79	427,94
2808	441,94	73,13	149,61	0,38	427,44	371,03	422,08	495,37	431,53
2809	414,76	73,78	218,05	11,31	430,45	376,61	422,51	473,70	434,68
2810	393,27	73,59	234,39	10,86	433,00	382,46	423,32	452,83	435,91
2811	468,24	73,32	192,08	16,52	433,06	386,13	423,87	450,06	435,14
2812	525,75	73,32	169,19	16,32	432,46	389,67	424,75	467,51	433,19
2813	554,55	73,45	163,68	16,12	432,73	390,64	425,58	495,72	430,78
2814	513,63	73,38	154,98	15,92	433,57	391,09	426,44	505,69	428,41
2815	517,32	72,15	152,41	15,77	432,55	389,57	427,40	506,77	425,59
2816	515,74	72,06	149,74	15,57	432,04	388,27	427,90	505,87	423,11
2817	510,01	72,15	148,17	15,42	431,26	385,53	428,59	505,48	421,13
2818	500,44	72,50	146,15	15,22	430,03	382,76	428,88	499,91	419,90
2819	492,35	72,70	144,20	15,07	427,81	379,32	429,29	495,83	418,90
2820	454,66	70,79	158,55	15,22	425,74	375,85	429,25	487,36	418,48
2821	610,77	71,89	186,36	14,56	423,43	372,71	428,89	509,06	418,47
2822	701,68	72,49	186,76	14,21	422,04	370,30	428,46	558,82	420,64
2823	689,15	73,72	181,36	13,91	422,76	368,45	428,04	605,62	424,48
2824	599,65	73,83	157,97	13,66	426,11	367,45	427,52	632,34	429,50
2825	536,80	74,36	144,59	13,47	429,17	366,95	426,61	638,75	434,64
2826	496,02	74,54	136,28	13,31	432,83	367,20	425,81	634,79	439,48
2827	466,65	74,54	130,21	13,16	435,91	368,26	424,67	627,03	443,08
2828	444,60	74,68	125,27	13,06	437,52	369,02	423,45	621,08	445,16
2829	427,38	74,95	122,52	12,91	437,49	370,06	422,30	605,80	445,76
2830	408,91	75,13	118,87	12,81	436,88	371,07	420,76	590,19	445,54
2831	390,09	74,34	115,86	12,71	434,58	371,09	419,31	577,01	443,73
2832	407,21	74,32	173,75	12,96	431,48	371,29	417,75	552,54	441,03
2833	485,52	73,91	150,96	12,41	427,52	370,82	416,01	545,33	437,95
2834	555,35	74,63	150,92	12,16	424,70	370,25	414,36	558,49	436,21
2835	517,81	74,08	137,89	11,96	421,71	369,80	412,81	575,97	435,85
2836	492,55	74,73	129,81	11,76	421,54	369,58	411,06	590,42	436,53
2837	481,02	74,35	126,02	11,56	423,25	369,17	409,26	601,89	438,47
2838	470,89	73,87	122,54	11,41	426,08	369,34	407,44	606,96	440,68
2839	460,52	73,83	119,68	11,26	427,95	370,45	405,56	610,26	442,19
2840	453,20	73,83	117,89	11,11	428,88	371,04	403,70	613,19	442,82
2841	448,31	73,96	116,68	10,96	430,43	372,34	401,82	616,41	443,00
2842	446,14	73,84	115,65	10,86	432,47	373,42	400,12	613,15	442,86
2843	443,59	73,85	114,77	10,71	433,66	374,56	398,31	613,36	442,51
2844	445,04	73,53	114,30	10,56	435,05	375,89	396,50	616,09	442,24
2845	444,62	73,52	114,07	10,41	435,74	377,12	394,59	618,52	442,25
2846	443,82	73,34	113,33	10,26	436,67	378,43	392,94	619,79	442,28

2847	445,48	73,16	113,10	10,16	437,38	379,49	391,26	623,13	442,05
2848	448,11	73,10	113,12	10,01	437,56	380,58	389,54	627,53	441,80
2849	452,84	73,42	113,54	9,86	439,01	382,12	387,96	631,99	441,03
2850	455,28	73,27	113,37	9,71	439,69	383,00	386,44	635,64	440,18
2851	460,81	72,91	113,79	9,56	441,42	384,42	384,89	639,57	438,90
2852	461,21	73,53	113,40	9,41	443,43	386,02	383,28	641,12	437,45
2853	456,69	73,65	113,40	9,26	444,61	387,87	381,89	641,69	436,13
2854	452,91	73,78	112,75	9,11	446,38	390,14	380,39	645,09	434,84
2855	451,19	73,69	112,63	9,01	449,29	391,95	378,81	645,02	434,03
2856	450,49	73,54	112,86	8,86	450,86	394,34	377,42	646,36	432,70
2857	450,81	73,72	112,78	8,71	452,92	396,38	376,01	647,87	431,79
2858	450,55	74,09	113,05	8,61	455,02	398,74	374,59	648,38	431,06
2859	451,02	73,81	112,60	8,46	458,67	400,87	373,24	647,56	430,68
2860	451,86	73,60	112,47	8,31	460,95	403,18	371,78	648,11	430,57
2861	452,26	73,57	112,59	8,16	462,60	404,94	370,60	649,31	430,26
2862	453,48	73,59	112,50	8,01	465,65	407,33	369,29	649,80	430,83
2863	454,18	73,72	112,45	7,86	468,70	409,53	368,00	649,62	431,30
2864	453,98	73,80	112,32	7,71	471,89	383,37	367,06	652,03	432,27
2865	450,18	73,39	111,96	7,61	472,92	340,47	366,49	652,56	433,88
2866	447,80	73,87	111,37	7,46	475,45	315,91	365,83	650,00	435,24
2867	446,54	73,79	111,08	7,31	478,16	299,59	365,02	648,35	436,66
2868	446,03	73,25	110,51	7,16	480,76	287,97	364,35	646,26	438,16
2869	444,41	73,81	110,60	7,01	482,62	279,85	363,55	643,40	439,79
2870	440,49	73,81	110,36	6,91	485,30	273,33	362,87	639,57	441,18
2871	435,89	73,56	109,76	6,76	486,44	268,33	362,02	635,39	442,89
2872	431,98	73,31	108,95	6,61	489,82	264,34	361,34	630,63	444,57
2873	426,68	73,19	108,41	6,51	489,32	261,32	360,46	625,17	445,77
2874	423,17	73,59	107,26	6,41	489,79	258,58	359,61	619,25	446,92
2875	417,40	73,46	106,90	6,31	491,60	256,41	358,71	614,70	447,50
2876	411,15	72,91	106,32	6,21	490,71	254,16	357,92	609,14	447,91
2877	407,02	72,99	105,43	6,11	489,03	251,96	357,07	604,29	447,76
2878	403,79	73,13	105,00	6,01	488,15	249,04	356,39	600,02	447,62
2879	402,03	72,99	104,63	5,91	484,16	248,20	355,57	596,06	446,92
2880	399,89	73,16	104,17	5,81	483,05	246,73	354,90	590,90	446,29
2881	396,01	72,62	103,71	5,71	481,56	245,10	354,07	586,34	445,68
2882	391,33	72,66	103,26	5,66	479,24	242,99	353,48	581,75	444,82
2883	388,25	72,42	102,89	5,56	476,58	242,16	352,65	578,26	443,99
2884	385,26	73,03	102,60	5,46	474,18	241,08	352,02	574,99	443,14
2885	380,31	72,76	102,07	5,36	471,93	240,04	351,38	570,55	442,37
2886	373,40	72,61	101,36	5,31	469,63	238,91	350,68	564,98	441,49
2887	368,53	72,61	100,36	5,21	467,03	237,98	350,17	557,69	440,51
2888	362,93	72,64	99,88	5,16	463,95	237,17	349,65	551,21	439,98
2889	353,32	72,18	99,24	5,11	460,96	236,07	349,09	541,42	438,91
2890	345,75	72,25	98,09	5,06	458,38	234,75	348,69	531,28	437,76
2891	337,74	72,50	96,87	5,01	453,34	234,11	348,36	519,40	436,42
2892	332,14	72,54	96,57	4,96	451,24	232,94	347,93	509,14	435,09
2893	327,61	72,33	95,98	4,91	446,40	231,91	347,43	498,31	433,29
2894	324,04	72,23	95,65	4,86	443,07	230,77	347,22	489,76	431,23
2895	320,62	72,16	95,25	4,81	439,84	229,92	346,88	480,12	429,32
2896	316,62	71,72	94,83	4,76	435,54	228,85	346,63	472,42	427,31
2897	314,50	72,10	94,43	4,71	432,51	227,53	346,20	465,48	425,29
2898	311,99	72,13	94,12	4,61	428,81	225,94	345,99	459,32	423,44
2899	309,81	72,04	93,64	4,56	425,58	224,95	345,71	452,60	421,55
2900	308,63	71,65	93,32	4,51	422,46	223,49	345,53	448,38	419,68
2901	306,67	72,28	92,45	4,46	417,42	222,74	345,39	443,21	417,73
2902	305,98	71,88	92,91	4,41	415,50	221,99	345,16	439,36	416,05
2903	305,46	72,33	94,09	4,36	413,09	221,14	344,87	436,86	414,69
2904	305,17	73,02	94,88	4,31	409,11	220,44	344,91	434,52	412,93
2905	305,78	73,15	95,68	4,26	406,73	219,97	344,74	432,99	411,59
2906	306,58	73,16	95,49	4,21	404,16	219,53	344,69	432,07	410,34
2907	306,93	72,84	95,33	4,16	403,58	219,11	344,65	431,62	409,32
2908	306,36	73,50	94,91	4,06	400,89	218,54	344,52	431,22	408,51
2909	306,00	72,99	94,49	4,01	399,91	218,58	344,46	431,23	407,78
2910	306,49	72,82	94,27	3,96	399,00	217,91	344,60	429,76	407,10
2911	307,79	72,94	94,00	3,91	397,45	217,63	344,64	430,66	406,70
2912	309,69	72,67	93,58	3,86	396,03	217,33	344,79	432,13	406,32
2913	313,19	72,67	93,78	3,76	395,70	216,74	345,06	434,40	406,03
2914	315,53	72,55	93,72	3,71	394,98	216,37	345,38	438,45	405,80
2915	313,96	72,61	93,54	3,66	394,30	216,04	345,57	441,28	405,77
2916	310,49	72,41	93,06	3,61	393,67	215,67	345,68	442,88	405,59
2917	307,84	72,30	92,59	3,61	393,83	215,14	345,96	440,34	404,90
2918	304,04	72,29	92,07	3,56	394,08	214,87	346,16	437,59	404,10
2919	299,92	71,90	91,74	3,51	394,01	214,17	346,46	432,49	403,16
2920	293,15	71,98	91,04	3,46	393,60	214,21	346,74	426,35	401,82
2921	286,40	72,11	90,53	3,46	393,39	213,26	347,18	418,79	400,15
2922	279,23	72,01	89,80	3,41	393,23	212,53	347,50	411,11	398,36
2923	272,67	71,97	89,16	3,41	392,37	211,67	347,98	403,20	396,31
2924	264,87	72,07	88,60	3,36	391,32	210,38	348,36	393,84	393,98
2925	259,91	71,82	88,13	3,36	390,27	209,41	348,86	383,53	391,54
2926	256,05	71,69	87,90	3,31	388,26	207,87	349,31	375,40	388,82
2927	252,33	71,87	87,35	3,31	386,63	206,75	349,77	367,95	386,27
2928	249,53	71,50	87,04	3,26	384,66	205,31	350,37	361,00	383,55
2929	246,81	71,51	86,61	3,26	383,07	204,01	350,89	354,20	380,92
2930	245,61	71,54	86,44	3,26	380,86	202,82	351,49	348,51	378,31
2931	242,45	71,32	85,94	3,21	379,01	200,95	352,18	342,76	375,92
2932	238,00	71,27	85,56	3,21	377,22	199,49	352,95	337,71	373,58
2933	233,91	71,26	85,19	3,21	374,96	198,21	353,56	332,02	371,30
2934	230,55	71,26	84,83	3,16	373,20	196,61	354,12	326,87	369,20
2935	227,87	71,14	84,30	3,16	371,37	195,27	354,80	321,54	367,11
2936	225,81	71,08	84,07	3,11	369,35	194,04	355,40	317,19	365,25
2937	223,23	71,03	83,67	3,11	367,19	192,40	356,04	312,46	363,20
2938	221,06	70,93	83,46	3,11	365,75	190,93	356,75	308,25	361,30
2939	219,48	71,18	83,42	3,06	363,41	190,07	357,29	304,98	359,52
2940	218,40	71,02	82,93	3,06	361,91	188,46	357,89	300,92	357,70
2941	217,54	70,96	82,91	3,06	360,22	187,45	358,51	297,76	356,05

2942	215,95	70,89	82,69	3,01	358,32	186,36	358,97	294,80	354,46
2943	214,49	70,77	82,41	3,01	356,77	185,42	359,51	291,94	353,07
2944	213,87	70,56	82,15	2,96	355,23	184,60	360,06	289,40	351,63
2945	213,11	70,71	81,76	2,96	353,84	183,44	360,63	287,33	350,18
2946	211,70	70,60	81,87	2,96	352,34	182,72	361,21	284,96	348,93
2947	210,87	70,57	81,69	2,91	351,13	182,13	361,69	282,85	347,59
2948	209,58	70,62	81,68	2,91	349,81	181,38	362,29	280,93	346,34
2949	208,58	70,51	81,37	2,91	348,57	181,10	362,82	279,38	345,29
2950	208,00	70,52	81,23	2,91	347,21	179,96	363,48	277,38	344,29
2951	207,37	70,49	81,05	2,86	346,24	179,68	363,99	276,06	343,18
2952	206,30	70,42	80,86	2,86	345,40	179,12	364,55	274,51	342,17
2953	205,76	70,37	80,79	2,86	344,41	178,51	365,26	273,58	341,22
2954	205,10	70,62	80,23	2,81	342,42	178,18	365,72	272,20	340,00
2955	204,25	70,68	80,84	2,81	341,06	178,68	366,38	271,15	338,91
2956	203,11	71,04	82,58	2,81	341,39	178,36	366,98	269,47	338,02
2957	202,46	71,30	84,20	2,76	339,61	178,48	367,66	268,43	336,97
2958	202,40	71,07	85,69	2,76	339,00	179,12	368,28	267,25	336,05
2959	202,05	71,79	87,01	2,76	337,85	179,36	368,94	266,36	335,12
2960	202,11	72,33	85,41	2,71	337,56	179,36	369,49	265,82	334,20
2961	201,85	72,37	84,43	2,71	337,59	179,18	370,13	264,78	333,33
2962	201,14	72,36	83,71	2,66	337,27	178,91	370,76	264,01	332,59
2963	200,55	72,22	83,35	2,66	336,96	179,02	371,40	262,95	331,99
2964	199,85	72,18	82,83	2,66	336,53	178,56	372,13	262,29	330,93
2965	199,07	71,69	82,39	2,66	335,99	178,92	372,68	261,50	330,28
2966	198,99	71,65	81,94	2,61	335,48	178,80	373,21	260,86	329,82
2967	198,49	71,34	81,67	2,61	334,97	179,07	373,70	260,92	329,20
2968	198,45	71,41	81,23	2,61	334,23	179,09	374,34	260,43	328,77
2969	198,48	71,03	80,95	2,56	333,59	179,42	374,80	259,98	328,36
2970	198,32	70,93	80,79	2,56	332,78	179,64	375,28	259,73	328,03
2971	198,16	70,87	80,78	2,56	332,21	179,88	375,77	259,52	327,76
2972	198,37	70,86	80,52	2,51	331,65	180,13	376,29	259,20	327,42
2973	198,48	70,80	80,37	2,51	330,95	180,92	376,70	259,32	327,13
2974	198,60	70,64	80,28	2,51	330,58	181,09	377,14	259,10	326,90
2975	198,52	70,54	79,97	2,46	329,83	181,25	377,63	259,01	326,70
2976	198,56	70,57	79,99	2,46	329,30	181,86	378,20	258,94	326,46
2977	198,32	70,45	79,83	2,46	328,75	181,93	378,63	258,94	326,18
2978	198,25	70,33	79,87	2,41	328,30	182,38	379,02	259,33	326,10
2979	198,59	70,45	79,88	2,41	327,89	182,85	379,48	258,99	325,87
2980	198,54	70,39	79,83	2,36	327,41	182,99	379,90	259,17	325,68
2981	199,17	70,31	79,63	2,36	327,03	183,21	380,34	258,99	325,59
2982	199,62	70,16	79,59	2,36	326,51	183,63	380,74	259,15	325,56
2983	200,02	70,19	79,51	2,31	325,84	183,89	381,15	259,42	325,48
2984	199,88	70,25	79,49	2,31	325,64	183,91	381,52	259,52	325,52
2985	200,67	70,19	79,58	2,31	325,29	184,47	381,91	259,62	325,49
2986	201,43	70,18	79,66	2,26	324,65	184,85	382,39	259,73	325,62
2987	201,87	70,13	79,77	2,26	324,64	185,13	382,75	259,55	325,62
2988	202,42	70,16	79,69	2,26	324,34	185,10	383,12	259,97	325,77
2989	203,14	70,07	79,58	2,21	323,62	185,62	383,53	260,52	325,86
2990	203,77	70,12	79,51	2,21	323,77	185,88	383,88	261,01	326,08
2991	203,84	70,19	79,61	2,21	323,26	186,24	384,24	261,11	326,27
2992	204,25	70,03	79,76	2,16	323,15	186,36	384,61	261,35	326,34
2993	204,45	70,03	79,90	2,16	323,03	186,31	385,03	261,91	326,57
2994	205,03	70,00	79,73	2,16	322,89	186,83	385,39	262,55	327,02
2995	205,29	69,97	79,82	2,11	322,50	187,25	385,80	262,76	327,38
2996	204,92	70,23	79,61	2,11	321,97	187,98	386,18	263,67	327,75
2997	204,25	70,42	80,94	2,11	320,70	188,45	386,57	262,82	327,97
2998	203,39	70,91	82,58	2,06	321,59	188,60	386,96	262,70	328,36
2999	202,89	70,89	84,34	2,06	320,19	189,28	387,30	262,46	328,63
3000	202,67	70,96	86,32	2,06	319,95	189,77	387,59	262,33	328,86
3001	202,60	71,37	87,45	2,01	319,45	190,16	387,88	262,59	329,09
3002	202,38	71,62	85,35	2,01	318,75	190,42	388,17	262,58	329,05
3003	202,85	71,03	84,22	2,01	319,21	190,28	388,38	262,45	329,29
3004	202,86	71,47	83,63	1,96	319,12	190,14	388,51	262,38	329,38
3005	202,80	71,04	83,13	1,96	319,04	190,42	388,78	262,74	329,45
3006	203,40	71,42	82,71	1,96	318,78	190,37	389,03	262,69	329,57
3007	203,22	71,64	82,36	1,91	318,60	190,30	389,25	262,50	329,57
3008	203,57	70,83	82,01	1,91	318,06	190,41	389,42	262,57	329,67
3009	203,81	71,35	81,67	1,91	317,99	190,39	389,57	262,70	329,64
3010	204,19	71,13	81,54	1,86	317,98	190,29	389,82	262,36	329,77
3011	203,82	71,22	81,24	1,86	316,96	190,49	390,00	263,05	329,91
3012	203,84	70,89	80,98	1,86	317,23	190,44	390,24	262,59	329,94
3013	203,89	70,89	80,93	1,81	317,12	190,13	390,34	262,21	330,20
3014	203,51	70,82	80,61	1,81	317,00	189,63	390,65	262,40	330,07
3015	203,46	70,79	80,49	1,81	316,59	189,26	390,67	262,14	330,23
3016	203,44	70,58	80,31	1,76	316,14	189,26	390,81	262,14	330,38
3017	203,96	70,44	80,02	1,76	316,08	189,20	390,86	261,88	330,38
3018	203,81	70,36	80,01	1,76	315,90	189,41	390,89	261,92	330,42
3019	204,41	70,32	80,10	1,71	315,83	189,24	391,11	261,93	330,43
3020	204,37	70,19	79,96	1,71	315,34	189,06	391,05	261,79	330,26
3021	204,57	70,03	79,98	1,71	315,43	188,95	391,14	261,71	330,33
3022	204,07	70,09	79,71	1,66	315,44	189,39	391,16	260,90	330,41
3023	204,03	70,02	79,66	1,66	315,16	189,34	391,22	260,92	330,42
3024	203,79	69,96	79,62	1,66	314,99	189,73	391,30	260,67	330,32
3025	204,13	69,90	79,71	1,61	314,70	189,88	391,31	260,47	330,41
3026	204,29	70,06	79,63	1,61	314,38	189,86	391,42	261,03	330,35
3027	203,93	70,06	79,55	1,61	314,21	189,81	391,52	260,66	330,31
3028	204,24	69,85	79,54	1,56	313,82	190,33	391,48	260,48	330,24
3029	203,62	69,96	79,52	1,56	313,61	190,15	391,60	260,43	330,19
3030	202,59	69,97	79,57	1,56	313,61	190,39	391,59	259,44	330,21
3031	202,01	69,96	79,51	1,56	312,95	190,58	391,70	259,78	330,09
3032	201,62	69,89	79,47	1,51	312,75	190,62	391,80	259,02	329,97
3033	201,16	69,76	79,26	1,51	312,57	190,86	391,96	258,76	329,89
3034	200,70	69,80	79,14	1,51	311,13	191,81	391,93	258,58	329,70
3035	200,43	70,26	80,48	1,46	311,19	191,90	392,15	257,63	329,53
3036	200,08	70,56	82,52	1,46	310,26	191,93	392,23	257,49	329,29

3037	199,50	70,48	84,19	1,46	310,01	192,29	392,39	256,92	329,09
3038	199,46	70,70	85,72	1,46	308,85	192,88	392,55	256,57	328,78
3039	199,40	70,85	87,27	1,41	308,41	193,23	392,79	256,35	328,57
3040	198,90	71,18	85,79	1,41	308,13	193,54	392,87	255,78	328,29
3041	199,39	71,04	84,32	1,41	308,29	193,62	392,98	255,53	328,22
3042	199,40	70,91	83,34	1,36	308,53	193,80	393,16	255,68	327,99
3043	198,70	71,24	82,76	1,36	308,30	194,04	393,31	255,65	327,76
3044	197,92	71,21	82,28	1,36	308,46	193,67	393,48	255,14	327,54
3045	196,80	71,08	81,62	1,31	308,00	193,22	393,72	254,73	327,21
3046	196,07	70,63	81,12	1,31	307,88	192,83	393,80	254,05	326,79
3047	195,27	70,76	80,97	1,31	307,57	192,30	393,94	253,07	326,39
3048	194,40	70,39	80,69	1,31	307,08	191,85	394,04	252,55	325,93
3049	193,61	70,51	80,42	1,26	306,89	191,12	393,98	251,85	325,57
3050	192,86	70,22	80,02	1,26	306,62	190,47	393,95	251,60	325,20
3051	192,49	70,19	79,77	1,26	306,38	189,52	393,83	251,11	324,61
3052	192,44	69,89	79,33	1,26	305,79	188,97	393,57	250,64	324,06
3053	192,01	69,96	79,28	1,21	305,50	188,07	393,19	249,85	323,47
3054	191,14	69,74	79,15	1,21	305,04	187,32	392,88	249,38	322,94
3055	190,98	69,62	79,03	1,21	304,49	186,51	392,44	248,52	322,25
3056	190,10	69,69	79,05	1,21	304,06	185,96	391,89	247,95	321,60
3057	190,08	69,61	78,90	1,16	303,72	185,11	391,36	247,26	321,06
3058	189,34	69,54	78,69	1,16	303,01	184,65	390,77	246,83	320,46
3059	188,72	69,57	78,61	1,16	302,50	183,86	390,26	246,07	319,78
3060	188,52	69,38	78,48	1,16	302,19	182,91	389,58	245,45	319,19
3061	188,15	69,16	78,26	1,11	301,26	182,80	388,88	245,28	318,67
3062	187,71	69,08	78,24	1,11	301,03	182,17	388,19	244,10	317,98
3063	187,55	69,22	78,10	1,11	300,49	181,36	387,51	243,70	317,36
3064	187,56	69,23	77,98	1,06	300,01	181,08	386,79	242,92	316,86
3065	187,29	69,56	78,05	1,06	298,71	181,08	386,11	242,96	316,07
3066	186,97	69,60	79,86	1,06	297,66	180,89	385,36	242,56	315,48
3067	186,34	69,85	81,90	1,06	297,15	180,56	384,62	241,99	314,90
3068	186,22	70,14	83,75	1,06	296,38	180,75	383,99	241,29	314,15
3069	185,90	70,42	85,35	1,01	295,55	180,82	383,23	240,69	313,60
3070	185,62	70,58	86,57	1,01	295,03	180,94	382,51	240,30	312,96
3071	185,57	70,82	87,35	1,01	294,63	180,88	381,82	239,79	312,28
3072	185,60	71,11	85,47	0,96	293,95	180,70	381,19	239,29	311,61
3073	185,86	70,86	83,75	0,96	293,75	180,39	380,51	238,70	311,02
3074	185,54	71,20	82,58	0,96	293,90	179,98	379,87	238,25	310,47
3075	185,31	70,93	81,81	0,96	292,38	180,07	379,08	238,17	309,81
3076	185,56	70,39	81,09	0,96	293,01	179,73	378,48	237,45	309,19
3077	185,44	70,78	80,62	0,91	291,91	179,28	377,81	237,18	308,55
3078	184,88	70,63	80,35	0,91	291,25	179,22	377,19	237,02	307,97
3079	184,93	70,47	80,04	0,91	290,47	179,12	376,53	236,58	307,36
3080	184,91	70,52	79,62	0,91	290,49	178,22	375,83	235,56	306,90
3081	184,38	70,55	79,38	0,86	289,95	178,16	375,14	235,22	306,40
3082	183,17	70,47	78,95	0,86	289,39	177,62	374,55	234,85	306,02
3083	182,90	70,44	78,88	0,86	289,21	176,72	373,92	234,35	305,37
3084	182,21	70,16	78,74	0,86	288,64	175,83	373,27	233,74	304,87
3085	181,15	70,09	78,61	0,81	288,19	175,18	372,73	233,32	303,99
3086	180,71	70,13	78,21	0,81	287,61	174,54	372,10	232,61	303,47
3087	180,04	69,80	78,29	0,81	287,06	173,97	371,65	232,07	302,91
3088	179,53	69,84	78,01	0,81	286,43	173,58	371,19	231,55	302,18
3089	179,07	69,64	77,88	0,76	285,95	172,74	370,62	231,00	301,60
3090	178,60	69,54	77,82	0,76	285,41	172,08	370,05	230,31	300,94
3091	178,08	69,61	77,70	0,76	285,05	171,55	369,57	229,62	300,32
3092	177,68	69,47	77,47	0,76	284,51	170,94	369,18	229,10	299,62
3093	177,63	69,24	77,40	0,71	283,93	170,51	368,71	228,48	299,04
3094	177,49	69,49	77,68	0,71	283,12	170,54	368,20	228,17	298,38
3095	177,04	69,54	79,49	0,71	282,32	169,97	367,65	227,30	297,85
3096	176,90	69,90	81,45	0,71	281,08	169,87	367,24	227,42	297,20
3097	176,62	69,69	83,04	0,71	280,54	169,51	366,84	226,84	296,68
3098	176,67	70,15	84,97	0,71	279,74	169,54	366,54	226,45	296,14
3099	176,46	70,39	86,33	0,66	279,44	169,38	366,08	226,37	295,69
3100	176,31	70,53	87,18	0,66	278,48	169,34	365,86	226,00	295,16
3101	176,45	71,00	85,26	0,66	277,96	169,47	365,53	225,91	294,69
3102	177,09	70,92	83,37	0,66	278,13	168,91	365,20	225,82	294,31
3103	176,93	70,93	82,39	0,61	278,20	168,44	364,93	225,69	293,89
3104	176,22	70,78	81,38	0,61	278,04	168,14	364,62	224,99	293,48
3105	175,66	70,37	80,65	0,61	277,60	168,01	364,31	225,05	292,95
3106	175,36	70,81	80,10	0,56	277,42	168,04	363,94	224,37	292,59
3107	174,58	70,61	79,58	0,56	277,27	167,12	363,64	223,45	292,07
3108	174,14	70,27	79,19	0,56	276,86	166,68	363,27	222,59	291,56
3109	173,59	70,34	78,84	0,56	276,61	166,06	363,01	221,71	291,04
3110	173,18	70,30	78,65	0,56	276,17	165,57	362,61	220,97	290,37
3111	172,61	70,21	78,32	0,51	275,79	165,41	362,17	220,50	289,71
3112	172,01	70,07	78,21	0,51	275,19	164,88	361,93	219,87	288,97
3113	171,55	70,00	77,98	0,51	274,38	164,99	361,64	218,93	288,33
3114	171,31	69,89	77,74	0,51	273,93	164,23	361,11	218,11	287,62
3115	171,36	70,01	77,66	0,51	273,39	164,13	360,76	217,73	286,96
3116	171,24	69,77	77,53	0,46	272,86	163,71	360,49	217,25	286,06
3117	170,89	69,64	77,38	0,46	272,24	163,46	360,14	216,72	285,38
3118	170,46	69,58	77,17	0,46	271,63	162,95	359,69	216,07	284,63
3119	170,26	69,37	77,05	0,46	271,17	162,82	359,37	215,58	283,97
3120	170,01	69,55	77,01	0,41	270,47	162,29	358,80	215,03	283,07
3121	169,27	69,56	76,83	0,41	269,84	161,72	358,40	214,25	282,40
3122	168,82	69,54	77,99	0,41	268,12	162,32	357,82	214,03	281,43
3123	168,59	69,86	80,18	0,41	268,50	162,07	357,27	213,57	280,97
3124	167,88	70,07	81,98	0,41	267,02	162,03	356,65	213,02	280,14
3125	167,42	70,07	83,73	0,41	266,46	162,15	355,94	212,36	279,56
3126	167,45	70,25	85,37	0,41	265,76	162,18	355,21	211,98	278,89
3127	168,10	70,57	86,68	0,36	265,25	162,22	354,48	211,68	278,32
3128	167,79	70,82	87,83	0,36	264,78	162,25	353,75	211,65	277,78
3129	168,19	71,11	85,83	0,36	264,18	162,21	353,10	211,37	277,28
3130	168,73	70,86	83,96	0,36	263,84	161,86	352,30	211,19	276,75
3131	169,29	70,98	82,60	0,31	263,44	161,55	351,57	211,10	276,34

3132	169,35	71,17	81,54	0,31	262,92	161,30	350,83	211,27	275,84
3133	169,58	70,71	80,84	0,31	262,39	161,11	350,05	210,98	275,52
3134	169,37	71,15	80,22	0,31	262,45	160,70	349,24	210,56	275,25
3135	168,91	70,97	79,58	0,26	261,93	160,06	348,49	210,08	274,80
3136	168,65	70,96	79,27	0,26	261,57	159,48	347,71	209,92	274,38
3137	168,23	70,79	78,76	0,26	261,05	159,26	347,02	209,46	274,06
3138	167,71	70,53	78,52	0,26	260,46	159,33	346,14	209,66	273,53
3139	167,54	70,52	78,11	0,26	260,02	158,45	345,42	209,01	273,17
3140	167,31	70,54	78,02	0,26	259,50	158,52	344,65	209,09	272,64
3141	167,30	70,23	77,67	0,21	258,89	158,54	343,93	208,81	272,27
3142	166,87	70,34	77,59	0,21	258,32	158,02	343,10	208,24	271,85
3143	166,48	70,07	77,54	0,21	257,79	158,18	342,44	208,06	271,41
3144	165,95	70,13	77,34	0,21	257,29	157,59	341,64	207,58	270,89
3145	165,93	70,04	77,32	0,21	256,68	157,28	340,87	207,27	270,36
3146	165,66	69,96	77,18	0,16	256,19	157,15	340,16	206,88	269,92
3147	165,21	69,87	76,95	0,16	255,68	157,13	339,52	206,40	269,54
3148	164,38	69,67	76,96	0,16	254,88	157,06	338,79	206,26	268,99
3149	164,10	69,83	76,70	0,16	254,68	156,48	338,12	205,67	268,59
3150	163,62	69,73	76,59	0,16	253,51	156,86	337,60	205,33	267,98
3151	163,29	69,52	76,46	0,11	253,35	156,57	336,86	205,04	267,64
3152	162,61	69,89	76,40	0,11	252,13	156,73	336,25	204,42	267,05
3153	162,26	69,43	78,01	0,11	251,96	156,43	335,66	204,06	266,39
3154	161,85	69,73	80,45	0,11	251,80	156,23	335,08	203,44	265,83
3155	161,48	70,09	82,52	0,11	250,74	156,35	334,68	202,98	265,13
3156	160,78	70,28	84,36	0,11	250,21	156,66	334,06	202,80	264,52
3157	160,14	70,43	85,77	0,06	249,62	156,72	333,70	202,06	263,98
3158	159,55	70,64	86,73	0,06	249,10	156,67	333,14	201,54	263,38
3159	159,72	71,02	84,80	0,06	248,49	156,90	332,71	201,51	262,71
3160	159,73	70,69	83,43	0,06	248,19	156,48	332,25	200,95	262,11
3161	159,94	70,93	81,92	0,06	247,65	156,63	331,80	200,74	261,55
3162	159,96	70,98	80,90	0,01	247,54	156,37	331,24	200,39	261,02

APPENDIX 5: Participants

Danick Power ing.
v-p operation
Services Polytests inc.
450.741.3636
www.polytests.com

Maxime Martin
Technicien
Services Polytests inc.
450.741.3636
www.polytests.com

APPENDIX 6: Drawings and specifications

NOTES:
NOTE [1] THIS EXPLODED VIEW DRAWING IS FOR REFERENCE ONLY
PLEASE REFER TO EM FOR CURRENT BOM

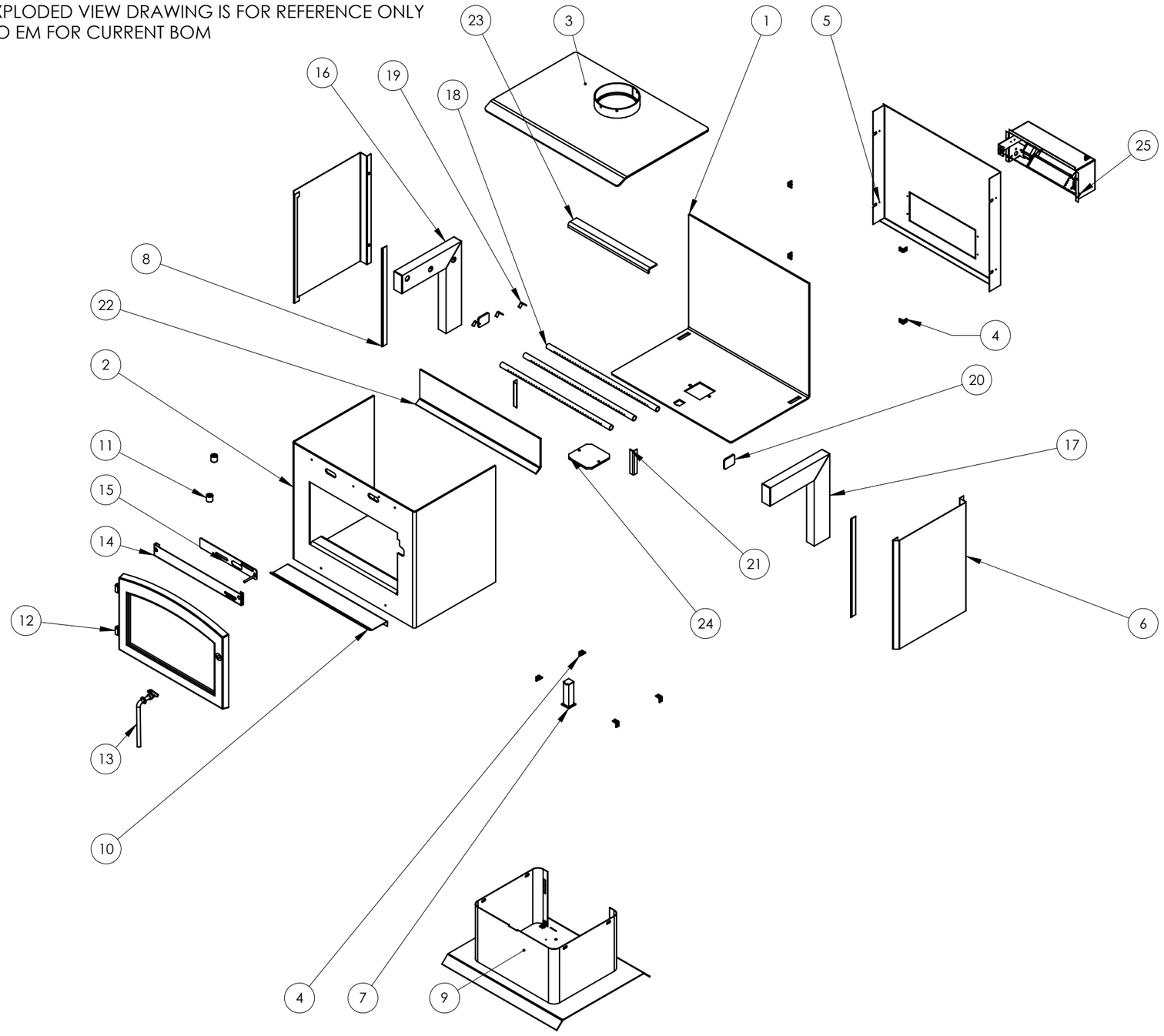

ITEM NO.	PART NUMBER	DESCRIPTION	Default/QTY.
1	W035-0268	BASE, BACK	1
2	W350-0543	HOUSING, FIREBOX FRONT & SIDES	1
3	W010-2158	ASSY, WELDED TOP (2100	1
4	W080-1029	BT BRACKET, M6 WELD	8
5	W585-0324	SHIELD, HEAT	1
6	W585-0327	SHIELD, HEAT (SIDE)	2
7	W010-2006	ASSEMBLY, PILOT TUBE (21/2200)	1
8	W080-1028	BRACKET, SIDE SHIELD RETAINER	2
9	EP20P	KIT, PEDESTAL	1
10	W710-0025	TRAY, ASH (1450)	1
11	W330-0006	BUSHING, HINGE 7/8x7/8x3/8	2
12	W010-2017_VOID	ASSY, DOOR (21/2200 CHINA)	1
13	W020-0503	BAGGIE, DOOR HANDLE (21/22)	1
14	W200-0319	COVER, AIR CONTROL	1
15	W010-2005	ASSEMBLY, AIR CONTROL (2100/2200)	1
16	W010-2014	ASSY, S/A TUBE (LS) 2100	1
17	W010-2015	ASSY, S/A TUBE (RS) 2100	1
18	W720-0131	TUBE, SECONDARY AIR (2100)	3
19	W500-0474	RETAINER, S/A TUBES	3
20	W500-0472	RETAINER, BRICK SIDE (2200)	2
21	W500-0503	RETAINER, BRICK (SIDE)	2
22	W150-0052	CHANNEL, AIRWASH	1
23	W500-0473	RETAINER, BRICK (REAR)	1
24	W510-0013	PLUG, ASH	1
25	EPT70	BLOWER KIT (TIMBERWOLF)	1

This drawing is the property of Wolf Steel LTD. or NAC. It is not to be reproduced nor used in any manner without our consent. All rights are reserved.

DATE FORMAT: MM/DD/YY

WOLF STEEL™

UNLESS OTHERWISE NOTED OR DEPICTED ALL DIMENSIONS ARE OUTSIDE IN INCHES ALL SURFACES ARE CONSIDERED CLASS "D"

TOLERANCES:
DIMENSIONS ±0.031 RADIUS ±0.062
REFERENCE DIMENSIONS ±0.062 ANGLES ±2°

TITLE: **ASSEMBLY, 2100-1**				MODEL: 2100-1		DRAWING:	**2100-1**
MATERIAL:			179.896 LBS	THICKNESS:		ISSUE DATE:	**UNRELEASED**
FINISH:		PROJECT LEAD: P HODGES	CN#:	SCALE: 1:5	SHEET 1 OF 2	DRAWN BY:	**UNRELEASED**
REVISION:	REV DATE:	REV NOTE:				CHECKED BY:	UNRELEASED

2100-1 REV.

NOTES:
NOTE [1] THIS EXPLODED VIEW DRAWING IS FOR REFERENCE ONLY
PLEASE REFER TO EM FOR CURRENT BOM

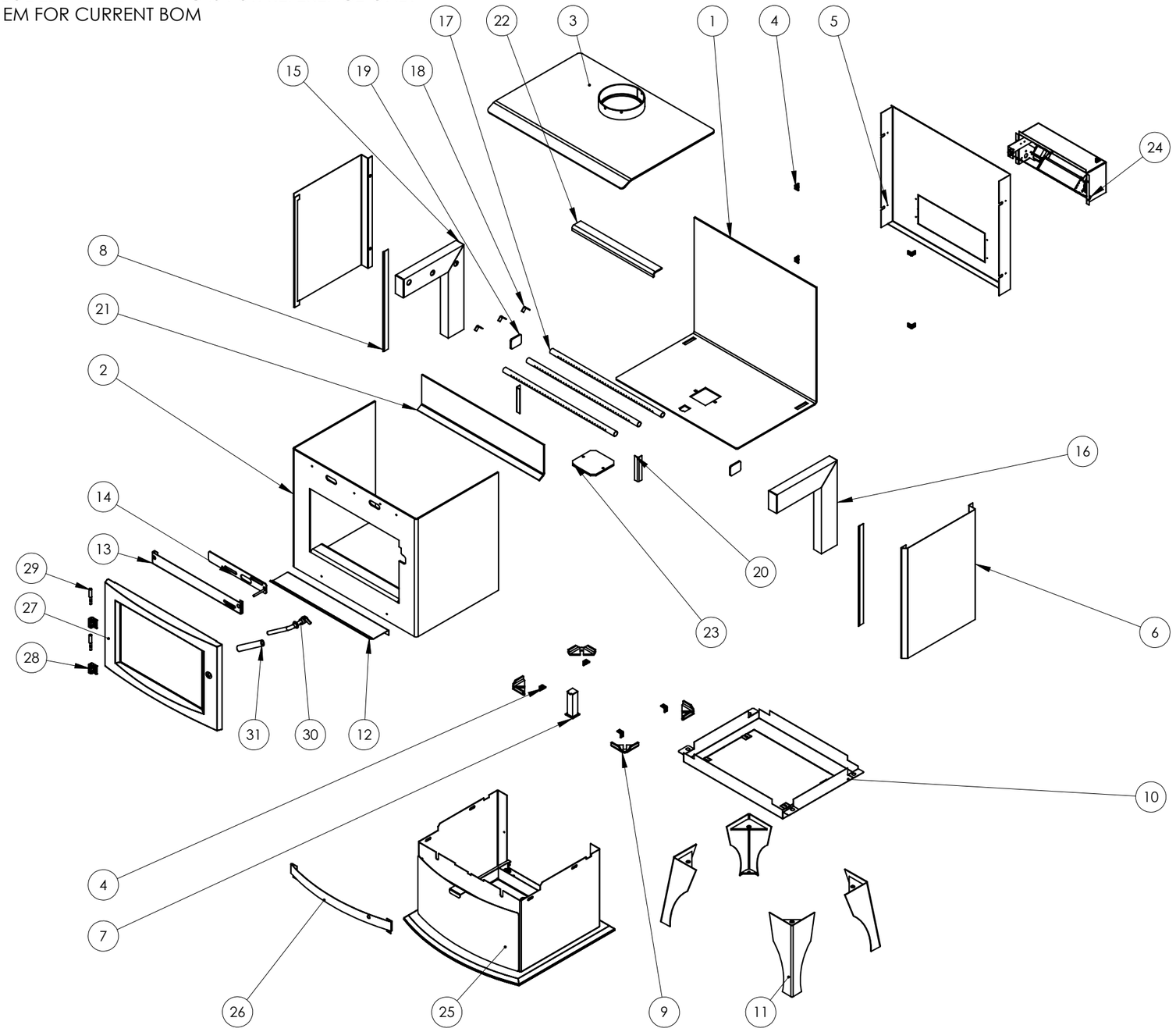

ITEM NO.	PART NUMBER	DESCRIPTION	Default/QTY.
1	W035-0268	BASE, BACK	1
2	W350-0543	HOUSING, FIREBOX FRONT & SIDES	1
3	W010-2158	ASSY, WELDED TOP (2100	1
4	W080-1029	BT BRACKET, M6 WELD	8
5	W585-0324	SHIELD, HEAT	1
6	W585-0327	SHIELD, HEAT (SIDE)	2
7	W010-2006	ASSEMBLY, PILOT TUBE (21/2200)	1
8	W080-1028	BRACKET, SIDE SHIELD RETAINER	2
9	W080-0982	BRACKET, LEG MOUNT (21/2200	4
10	W585-0282	SHEILD, HEAT	1
11	W010-2138	ASSY, TRADITION LEG (EP21L)	4
12	W710-0025	TRAY, ASH (1450)	1
13	W200-0319	COVER, AIR CONTROL	1
14	W010-2005	ASSEMBLY, AIR CONTROL (2100/2200)	1
15	W010-2014	ASSY, S/A TUBE (LS) 2100	1
16	W010-2015	ASSY, S/A TUBE (RS) 2100	1
17	W720-0131	TUBE, SECONDARY AIR (2100)	3
18	W500-0474	RETAINER, S/A TUBES	3
19	W500-0472	RETAINER, BRICK SIDE (2200)	2
20	W500-0503	RETAINER, BRICK (SIDE)	2
21	W150-0052	CHANNEL, AIRWASH	1
22	W500-0473	RETAINER, BRICK (REAR)	1
23	W510-0013	PLUG, ASH	1
24	EPT70	BLOWER KIT (TIMBERWOLF)	1
25	W010-3021	ASSY, PEDESTAL (REPL. W010-2957)	1
26	W200-0415	COVER, ASH DRAWER TOP	1
27	W010-4550	ASSEMBLY, DOOR AND GLASS	1
28	W330-0098	HINGE, LOWER	2
29	W485-0053	PIN, ADJUSTABLE CAM HINGE	2
30	W020-1107	BAG, DOOR HANDLE	1
31	W325-0100	HANDLE, FRONT DOOR	1

S15 REV.

This drawing is the property of Wolf Steel LTD. or NAC. It is not to be reproduced nor used in any manner without our consent. All rights are reserved.

DATE FORMAT: MM/DD/YY

WOLF STEEL

UNLESS OTHERWISE NOTED OR DEPICTED ALL DIMENSIONS ARE OUTSIDE IN INCHES ALL SURFACES ARE CONSIDERED CLASS "D"

TOLERANCES:
DIMENSIONS ±0.031 RADIUS ±0.062
REFERENCE DIMENSIONS ±0.062 ANGLES ±2°

TITLE: **ASSEMBLY, S15**					MODEL: S15	DRAWING:	**S15**
MATERIAL:			214.913 LBS		THICKNESS:	ISSUE DATE:	**UNRELEASED**
FINISH:		PROJECT LEAD: P HODGES	CN#:		SCALE: 1:5	SHEET 1 OF 1	DRAWN BY: **UNRELEASED**
REVISION:	REV DATE:	REV NOTE:					CHECKED BY: UNRELEASED

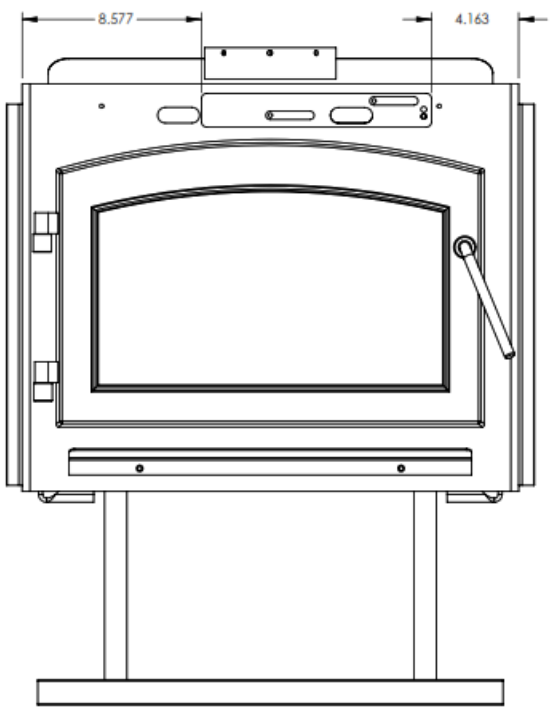

HIGH BURN

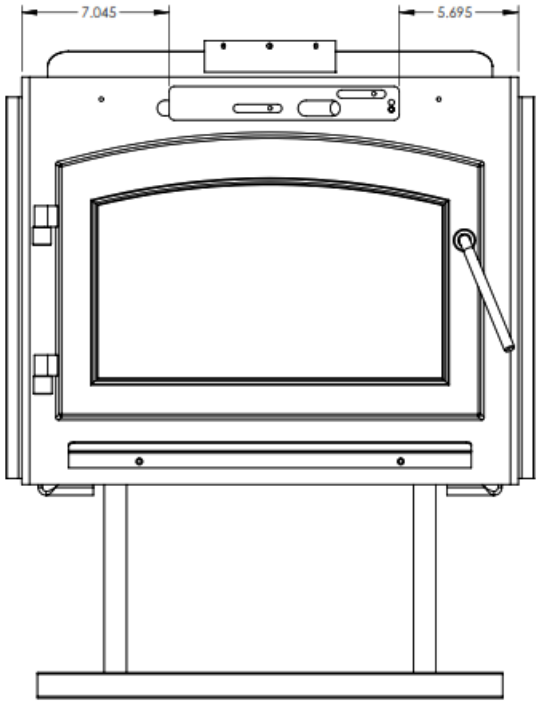

MEDIUM BURN

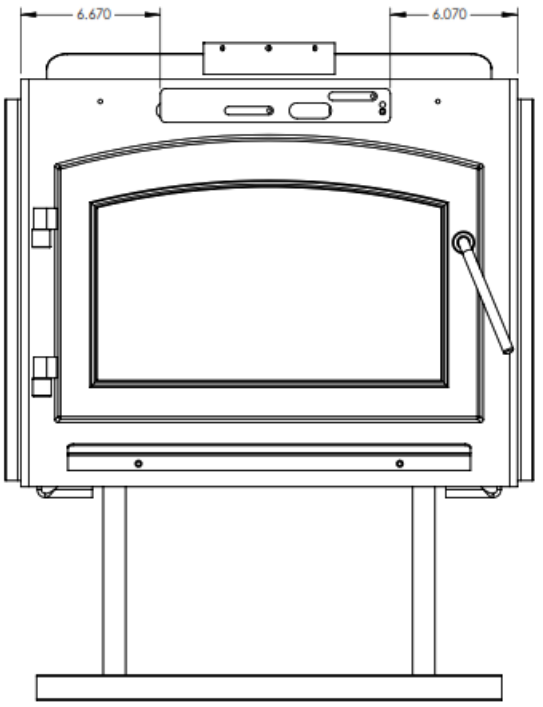

LOW BURN

UNLESS OTHERWISE NOTED OR DEPICTED ALL DIMENSIONS ARE OUTSIDE IN INCHES. ALL SURFACES ARE CONSIDERED CLASS "D"	TITLE: ASSEMBLY, 2100-1				MODEL: 2100-1	DRAWING:	2100-1
	MATERIAL:			174.705 LBS	THICKNESS:	ISSUE DATE:	UNRELEASED
TOLERANCES:	FINISH:		PROJECT LEAD: P HODGES	CN#:	SCALE: 1:5	SHEET 3 OF 3	DRAWN BY: UNRELEASED
WOLF STEEL	REVISION:	REV DATE:	REV NOTE:				CHECKED BY: UNRELEASED



WOLF STEEL LTD.	DIMENSIONS IN MILLIMETERS TOLERANCES: UNLESS OTHERWISE NOTED. WHERW APPLICATION. FLAT IS SHOWN FINISHED SIDE UP FORMED PARTS ±0.80 BLANKED PARTS ±0.15 REFERENCE DIMENSION ±1.50 ANGLES ±2°	**TITLE:** BAFFLE. CERAMIC FIBRE	SCALE 0.375
		MODEL: 2100	**DRAWING:** W018-0119
		MATERIAL: 25.4 mm CERAMIC BOARD (2300°F) 510.00 x 152.00	**DRAWN BY:** A.RIGDEN
		REVISION: A: 01.14.10 FIX DIM & ADD TOLERANCE	**DATE:** 05.11.09
			CHECKED BY: JFK

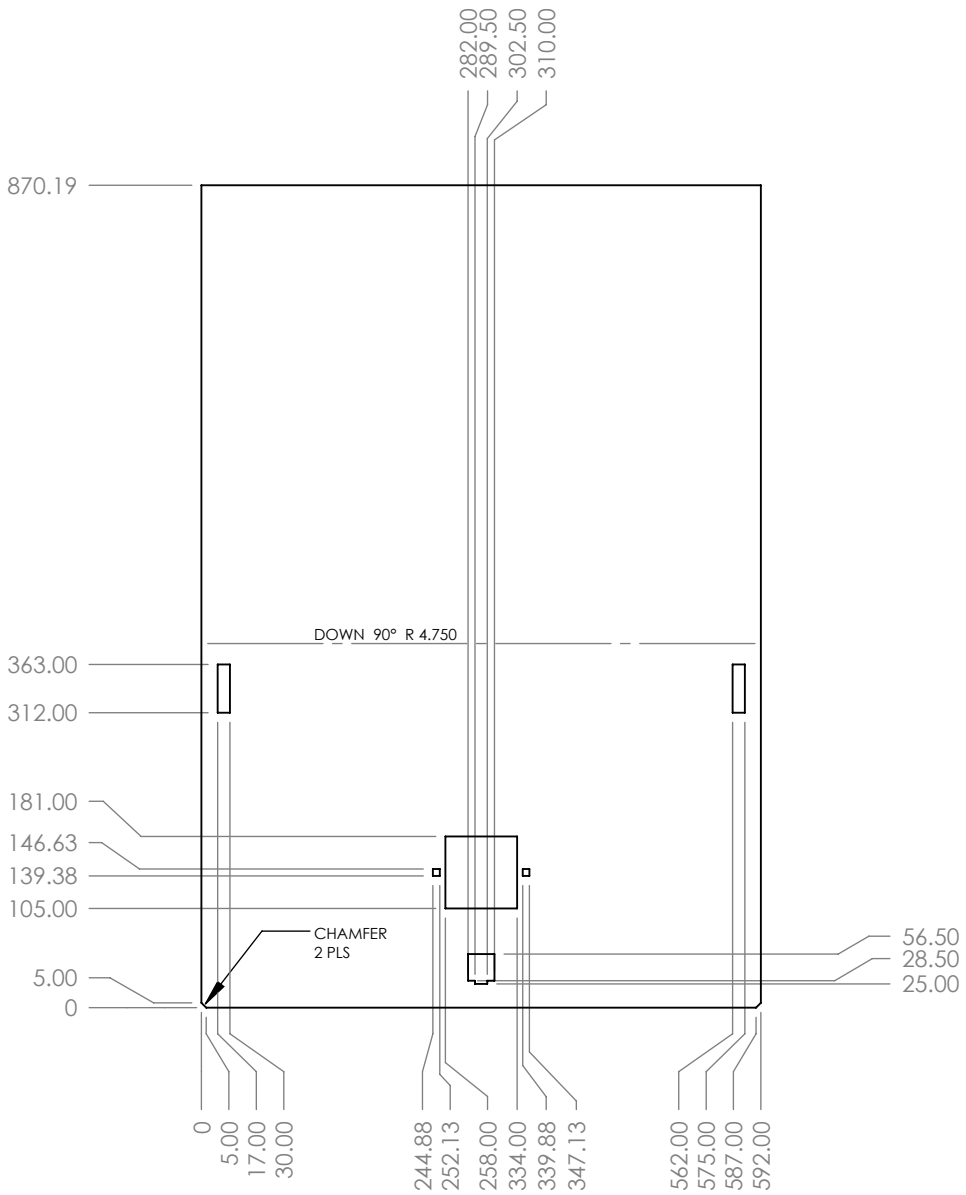

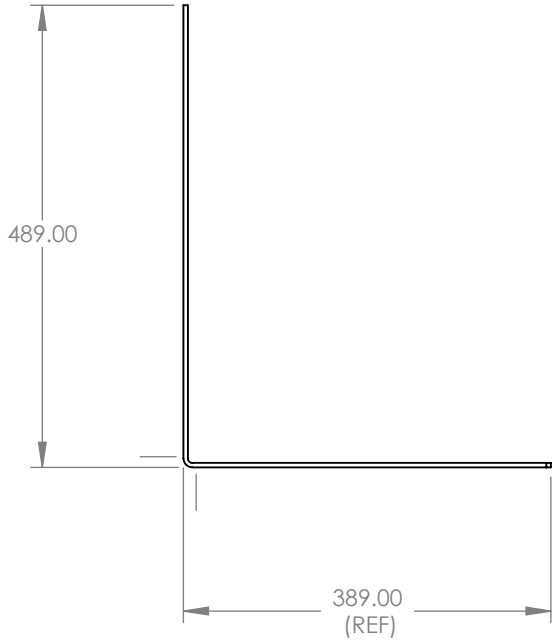

NOTE: ALTERNATE MATERIAL 3/16" HR P&O

		SCALE: 1:8	SHEET 1 OF 1
WOLF STEEL LTD	TITLE: BASE, BACK	DRAWING: **W035-0268**	
DIMENSIONS IN MILLEMETERS TOLERANCES: UNLESS OTHERWISE NOTED WHERE APPLICABLE, FLAT IS SHOWN FINISHED SIDE UP FORMED PARTS ±0.80 BLANKED PARTS ±0.15 REFERENCE DIMENSION ±1.50 ANGLES ±2°	MODEL: 2100	DRAWN BY: A.RIGDEN	
	MATERIAL: W055-0487 4.75 mm HR P&O 4.75 x 592.00 x 870.19	DATE: 10/28/09	
	REVISION: -	CHECKED BY: M.ACETO	

LASER CHECKED

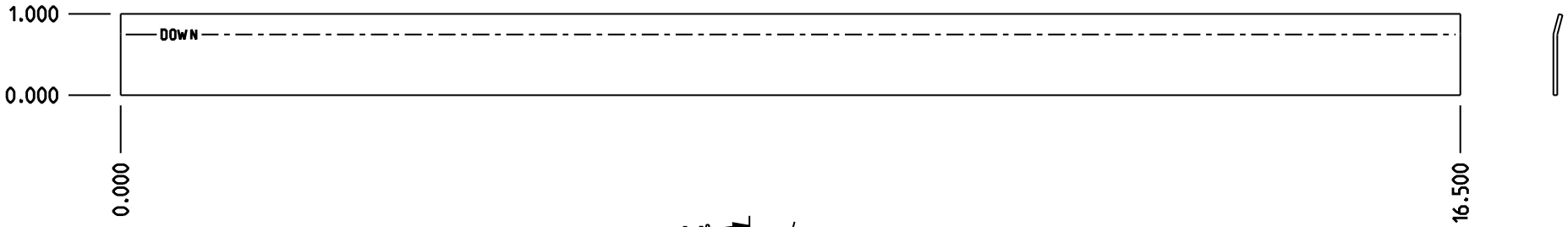

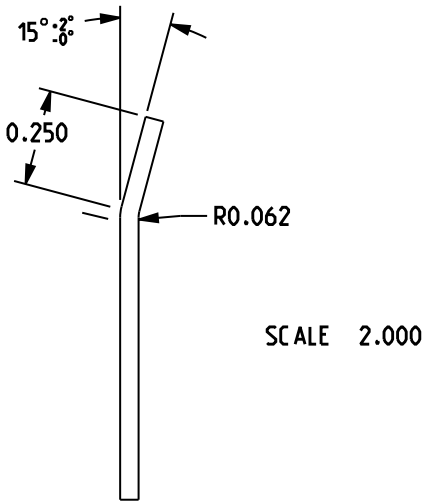

SCALE 2.000

B
DIE # 172

SCALE 0.500

WOLF STEEL LTD.	**TOLERANCES:** UNLESS OTHERWISE NOTED WHERE APPLICABLE, FLAT IS SHOWN FINISHED SIDE UP FORMED PARTS ±0.031 BLANKED PARTS ±0.005 REFERENCE DIMENSION ±0.063 ANGLES ±2°	**TITLE:** BRACKET, SIDE SHIELD RETAINER	**DRAWING:** W080-0966
		MODEL: EPA STOVES	**DRAWN BY:** A.RIGDEN
		MATERIAL: [B] W 165-0126 18 GA CR [A] 0.048 x 16.500 x 1.000	**DATE:** 07.30.08
		REVISION: B: 06.23.11 (P.K) ADD COIL# & DIE SHOE	**CHECKED BY:** JFK

1

Metric Thread Size	M6
Width (A)	13 mm
Thickness (B)	3.1 mm
Length of Leg from End to Angle	
(C)	18.8 mm
(C1)	19 mm
Centre of Hole to Angle (D)	7.8 mm
Pilot Diameter (E)	7.4 mm
Pilot Height (F)	1.5 mm
Projection Width (G)	2.9 mm
Projection Height (H)	0.5 mm
Projection Length (I)	4.6 mm
Material	High-Welding Quality, Low Carbon Steel
Finish	Plain
Threads	Metric
Tensile Strength	60,000 psi
Yeild Point	30,000 psi
Shear Strength	30,000 psi
Elongation 2"	30% max

Approved by:	
Signature:	
Date:	

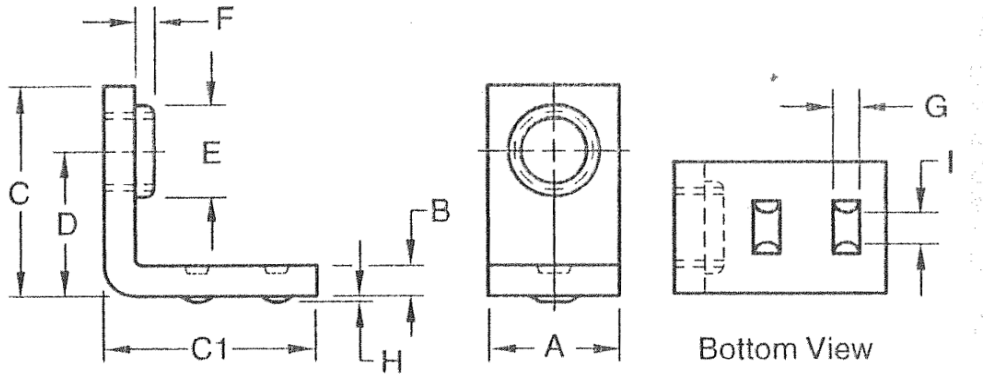

Reference Only

WOLF STEEL LTD

DIMS: MM

TITLE: BT BRACKET, M6 WELD	DWG#: W080-1029
REV:	DATE: 06.06.11

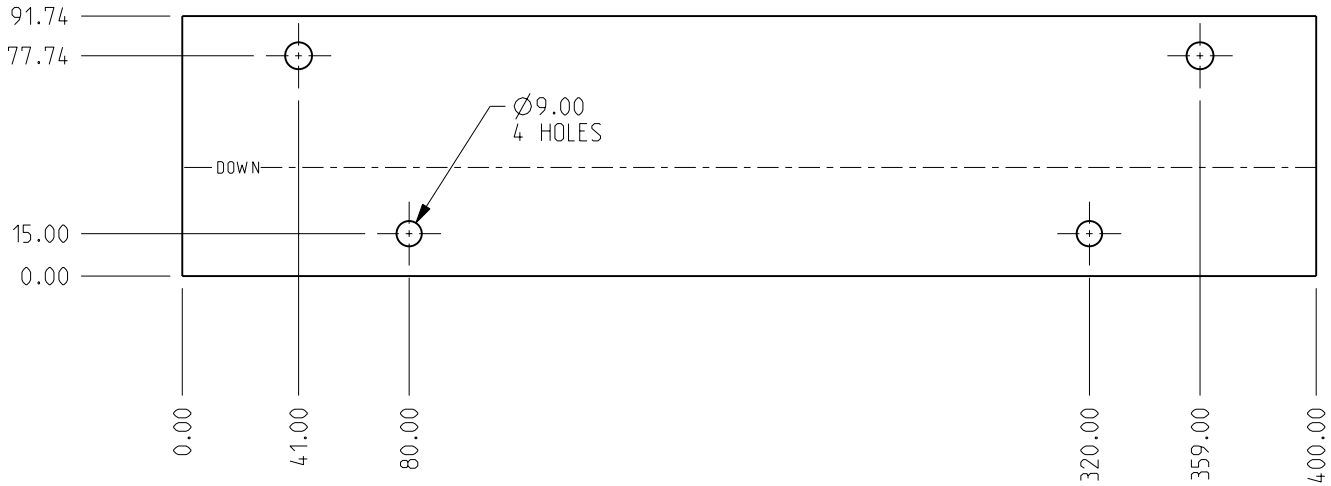

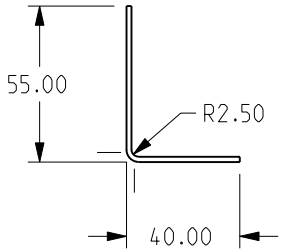

WOLF STEEL LTD.

DIMENSIONS IN MILLEMETERS
TOLERANCES:
UNLESS OTHERWISE NOTED.
WHERW APPLICATION, FLAT IS SHOWN
FINISHED SIDE UP

FORMED PARTS	±0.80
BLANKED PARTS	±0.15
REFERENCE DIMENSION	±1.50
ANGLES	±2°

TITLE:	BRACKET, SHIPPING
MODEL:	2100/2200
MATERIAL:	1.80 mm HOT ROLLED P.&O. 400.00 x 91.74
REVISION:	

SCALE 0.375

DRAWING:	W080-1038
DRAWN BY:	A.RIGDEN
DATE:	05.13.09
CHECKED BY:	JFK

0

NOTE:

- AVERAGE WEIGHT: 1.80 - 2.00LBS.
B - ASTM DESIGNATION: CURRENT C1261.

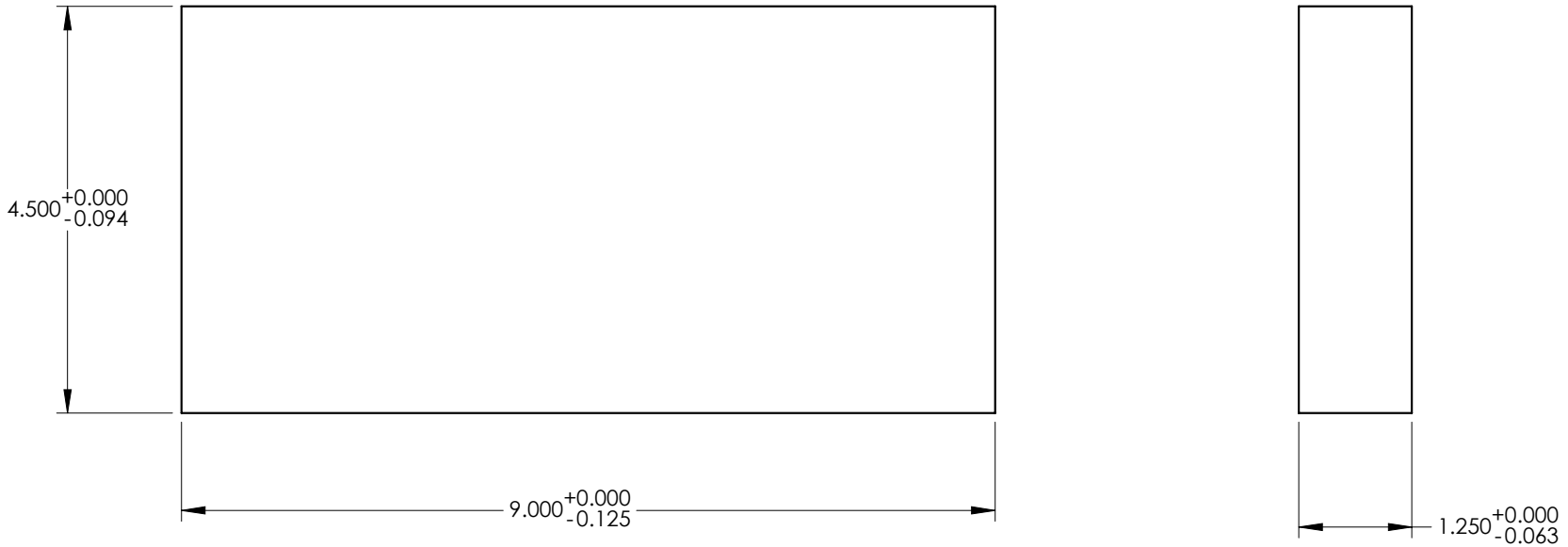

This drawing is the property of Wolf Steel LTD. or NAC. It is not to be reproduced nor used in any manner without our consent. All rights are reserved.

WOLF STEEL LTD.
NAC Napoleon Appliance Corporation

UNLESS OTHERWISE NOTED OR DEPICTED ALL DIMENSIONS ARE OUTSIDE IN INCHES

TOLERANCES:

DIMENSIONS	±0.015"
REFERENCE DIMENSIONS	±0.031"
ANGLES	±2°

TITLE:	**BRICK, EPA #7 LIGHT WEIGHT**		MODEL:	DRAWING:	**W090-0015**
MATERIAL:	LIGHT WEIGHT REFRACTORY		LBS	DRAWN BY:	**A.ZHANG**
FINISH:			SCALE: 1:2 SHEET 1 OF 1	MM/DD/YYYY:	**5/13/03**
REVISION:	**C**	**3/01/12** (AGR) UPDATE NOTE		CHECKED BY:	HANS

NOTE: DIMENSIONS IN BRACKETS
ARE IN MM

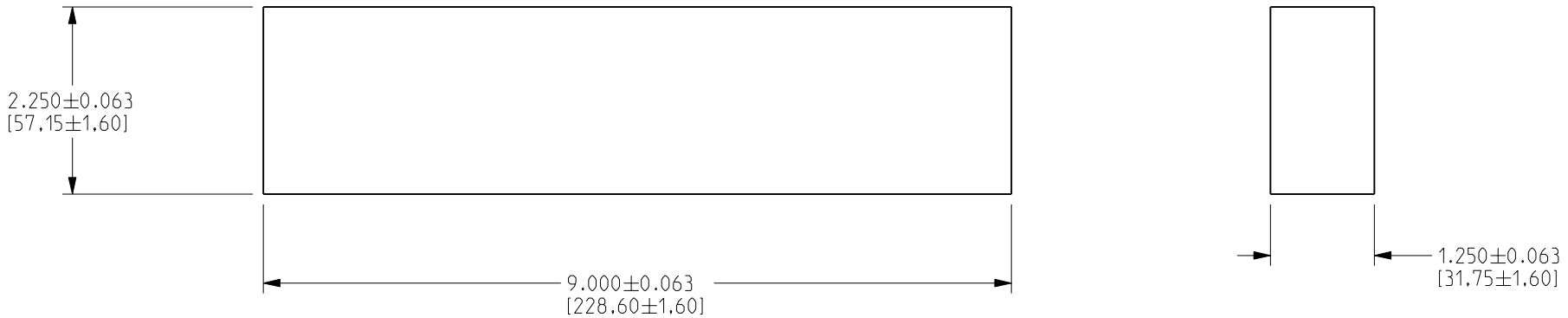

WOLF STEEL LTD.	TOLERANCES: UNLESS OTHERWISE NOTED. WHERE APPLICABLE, FLAT IS SHOWN FINISHED SIDE UP. FORMED PARTS ±0.031; BLANKED PARTS ±0.005; REFERENCE DIMENSION ±0.063; ANGLES ±2°	SCALE 0.500
	TITLE: BRICK, EPA #8	DRAWING: W090-0018
	MODEL:	DRAWN BY: A.RIGDEN
	MATERIAL: LIGHT WEIGHT REFRACTORY 1.250 x 9.000 x 4.500	DATE: 05.11.09
	REVISION: -	CHECKED BY: JFK

3+

NOTE: DIMENSIONS IN BRACKETS
ARE IN MM

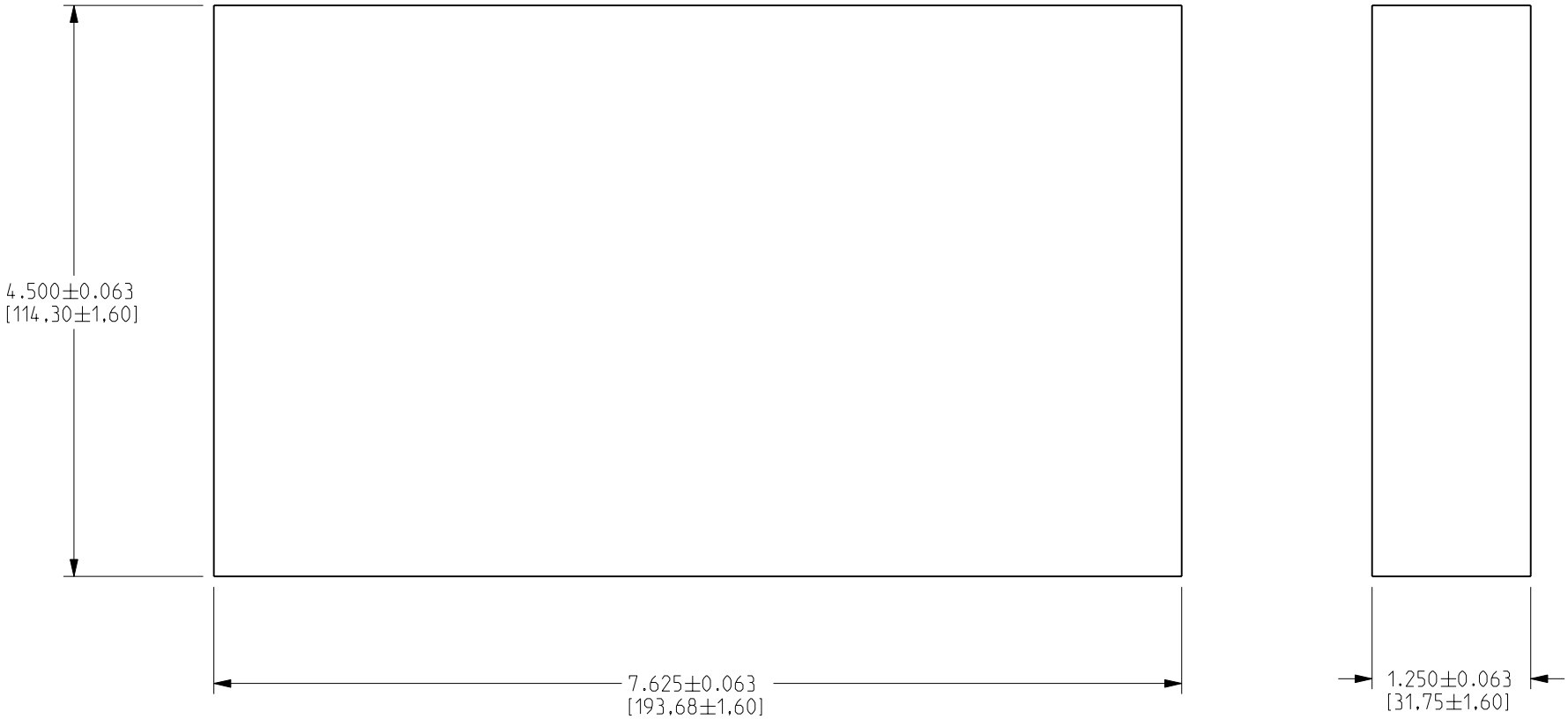

WOLF STEEL LTD.	TOLERANCES: UNLESS OTHERWISE NOTED WHERE APPLICABLE, FLAT IS SHOWN FINISHED SIDE UP FORMED PARTS ±0.031 BLANKED PARTS ±0.005 REFERENCE DIMENSION ±0.063 ANGLES ±2°	SCALE 0.750
	TITLE: BRICK, 7.625 x 4.500 x 1.250	DRAWING: W090-0167
	MODEL:	DRAWN BY: A.RIGDEN
	MATERIAL: LIGHT WEIGHT REFRACTORY 1.250 x 7.625 x 4.500	DATE: 05.11.09
	REVISION: -	CHECKED BY: JFK

3+

NOTE: DIMENSIONS IN BRACKETS
ARE IN MM

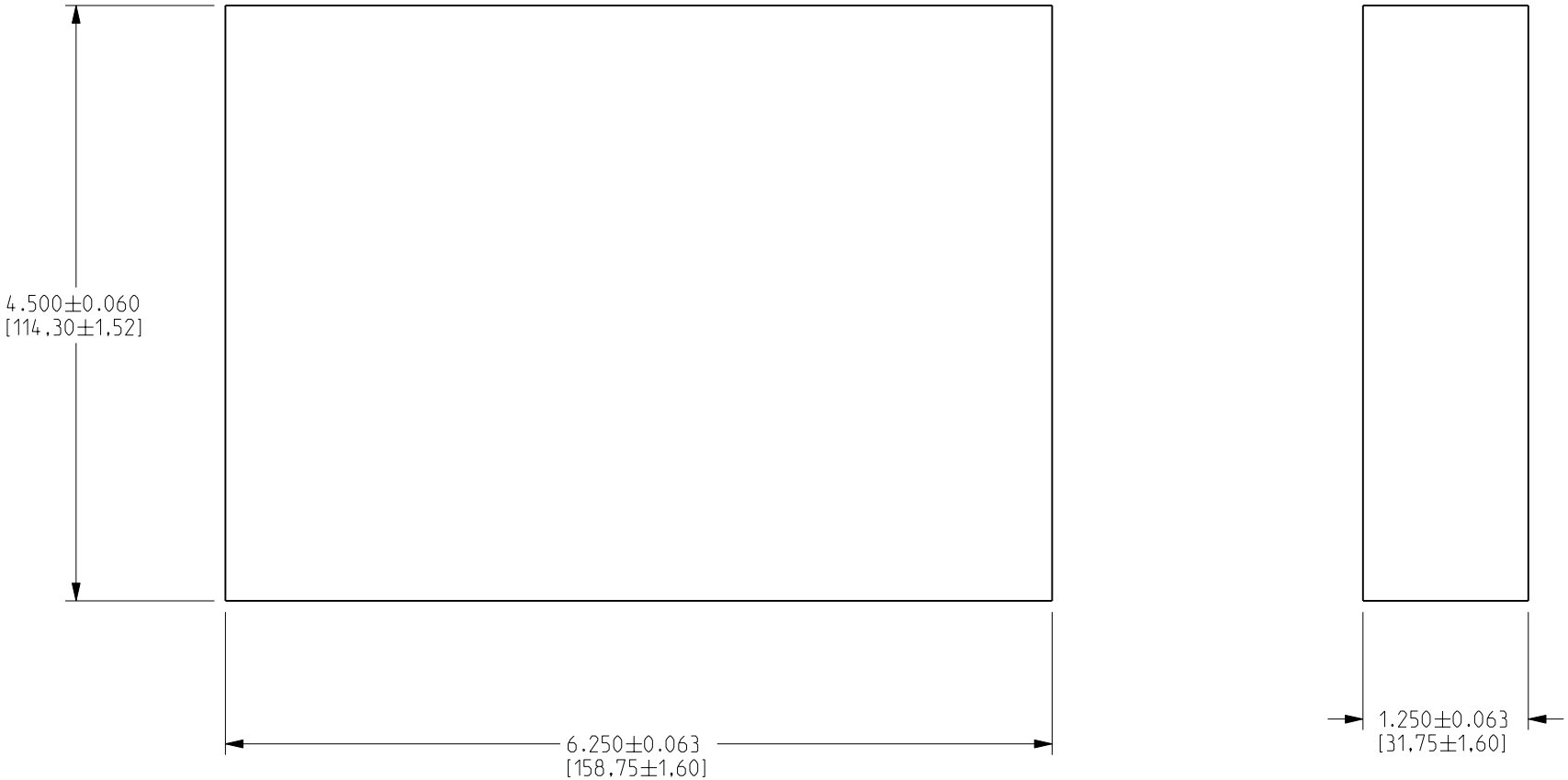

SCALE 0.750

WOLF STEEL LTD.

TOLERANCES:

UNLESS OTHERWISE NOTED
WHERE APPLICABLE, FLAT IS SHOWN
FINISHED SIDE UP

FORMED PARTS	±0.031
BLANKED PARTS	±0.005
REFERENCE DIMENSION	±0.063
ANGLES	±2°

TITLE:	BRICK, 4.500 x 6.375 x 1.250		**DRAWING:** W090-0168
MODEL:	2100/2200		**DRAWN BY:** A.RIGDEN
MATERIAL:	LIGHT WEIGHT REFRACTORY	1.250 x 4.500 x 6.250	**DATE:** 05.11.09
REVISION:	**A: 06.18.09** (AGR) REMOVE MTL		**CHECKED BY:** JFK

3+

NOTE: DIMENSIONS IN BRACKETS
ARE IN MM

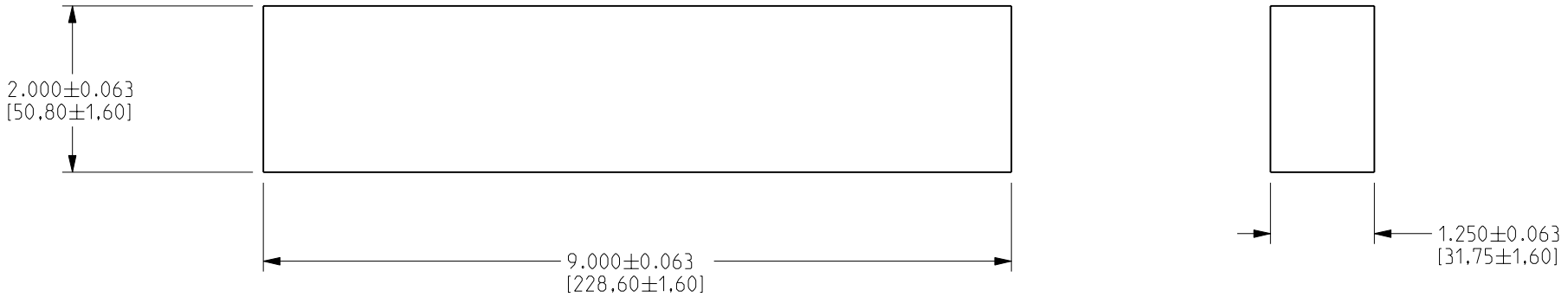

SCALE 0.500

WOLF STEEL LTD.

TOLERANCES:

UNLESS OTHERWISE NOTED
WHERE APPLICABLE, FLAT IS SHOWN
FINISHED SIDE UP

FORMED PARTS	±0.031
BLANKED PARTS	±0.005
REFERENCE DIMENSION	±0.063
ANGLES	±2°

TITLE:	BRICK, 9.000 x 2.000 x 1.250		**DRAWING:** W090-0172
MODEL:	2100		**DRAWN BY:** A.RIGDEN
MATERIAL:	LIGHT WEIGHT REFRACTORY	1.250 x 9.000 x 2.000	**DATE:** 05.11.09
REVISION:			**CHECKED BY:** JFK

0

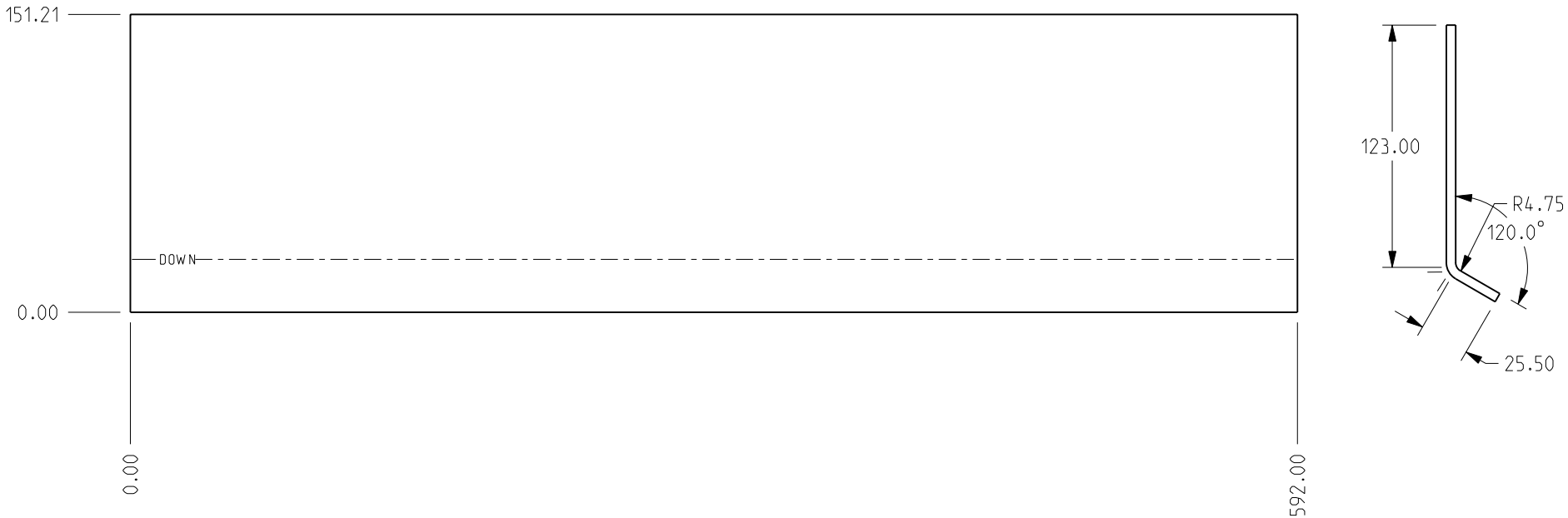

WOLF STEEL LTD.	DIMENSIONS IN MILLEMETERS TOLERANCES: UNLESS OTHERWISE NOTED. WHERW APPLICATION, FLAT IS SHOWN FINISHED SIDE UP FORMED PARTS ±0.80 BLANKED PARTS ±0.15 REFERENCE DIMENSION ±1.50 ANGLES ±2°	**TITLE:** CHANNEL, AIRWASH **MODEL:** 2100/2200 **MATERIAL:** 4.75 mm HOT ROLLED P.&O. 592.00 x 151.21 **REVISION:** -	SCALE 0.313 **DRAWING:** W150-0052 **DRAWN BY:** A.RIGDEN **DATE:** 05.11.09 **CHECKED BY:** JFK

6+

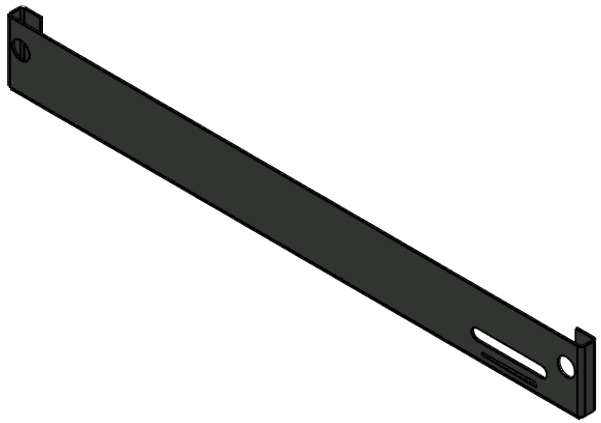

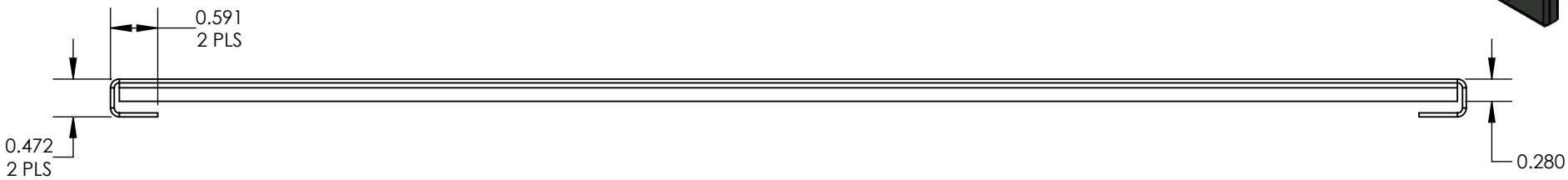

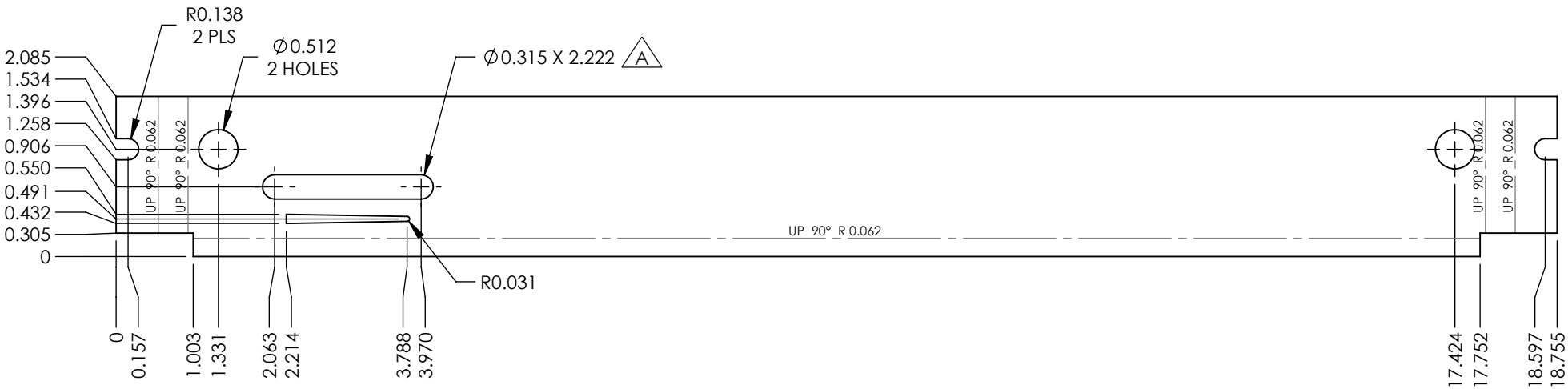

This drawing is the property of Wolf Steel LTD. or NAC. It is not to be reproduced nor used in any manner without our consent. All rights are reserved.

DATE FORMAT MM/DD/YY

WOLF STEEL

04/30/18 by G.R.

UNLESS OTHERWISE NOTED OR DEPICTED ALL DIMENSIONS ARE OUTSIDE IN INCHES ALL SURFACES ARE CONSIDERED CLASS "D"

REFER TO ENG-009 FOR SURFACE FINISH CRITERIA

TOLERANCES:

FORMED PARTS ±0.031 REFERENCE DIMENSIONS ±0.063
BLANKED PARTS ±0.010 ANGLES ±2°

TITLE:	**COVER, AIR CONTROL**			MODEL:	2200	DRAWING: **W200-0319**
MATERIAL:	18 GA CRS		0.502 LBS	THICKNESS:	0.048	ISSUE DATE: **11/06/18**
FINISH:		PROJECT LEAD:	P HODGES	CN#:	SCALE: 1:4 SHEET 1 OF 1	DRAWN BY: **MS**
REVISION: **A**	REV DATE: **11/06/18**	REV NOTE: CHANGED THE SLOT SIZE TO ADJUST AIR ENTRANCE				CHECKED BY: PH

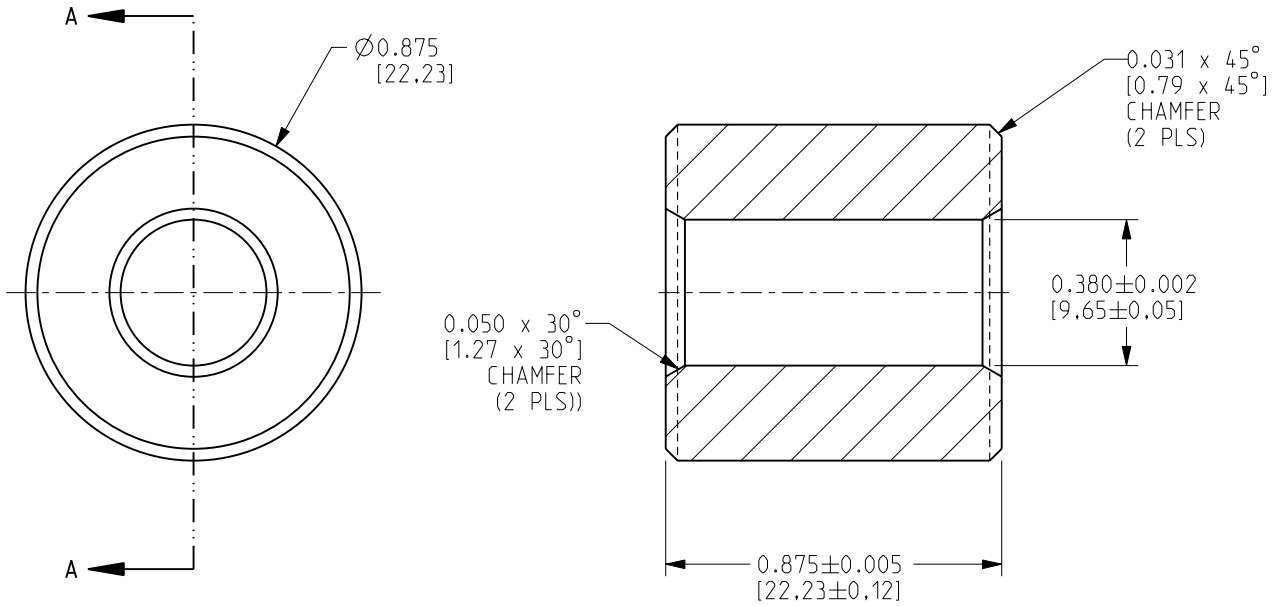

SECTION A-A

NOTE: DIMENSIONS IN BRACKETS ARE IN MM

		SCALE 2.000
WOLF STEEL LTD.	TITLE: HINGE, BUSHING	DRAWING: W330-0006
TOLERANCES: UNLESS OTHERWISE NOTED. WHERE APPLICABLE, FLAT IS SHOWN FINISHED SIDE UP. FORMED PARTS ±0.031; BLANKED PARTS ±0.005; REFERENCE DIMENSION ±0.063; ANGLES ±2°	MODEL: EPA	DRAWN BY: A. ZHANG
	MATERIAL:	DATE: 03.19.93
	REVISION: F: 03.05.09 (AGR) FIX MODEL & ADD METRIC DIMS	CHECKED BY: JFK

1.

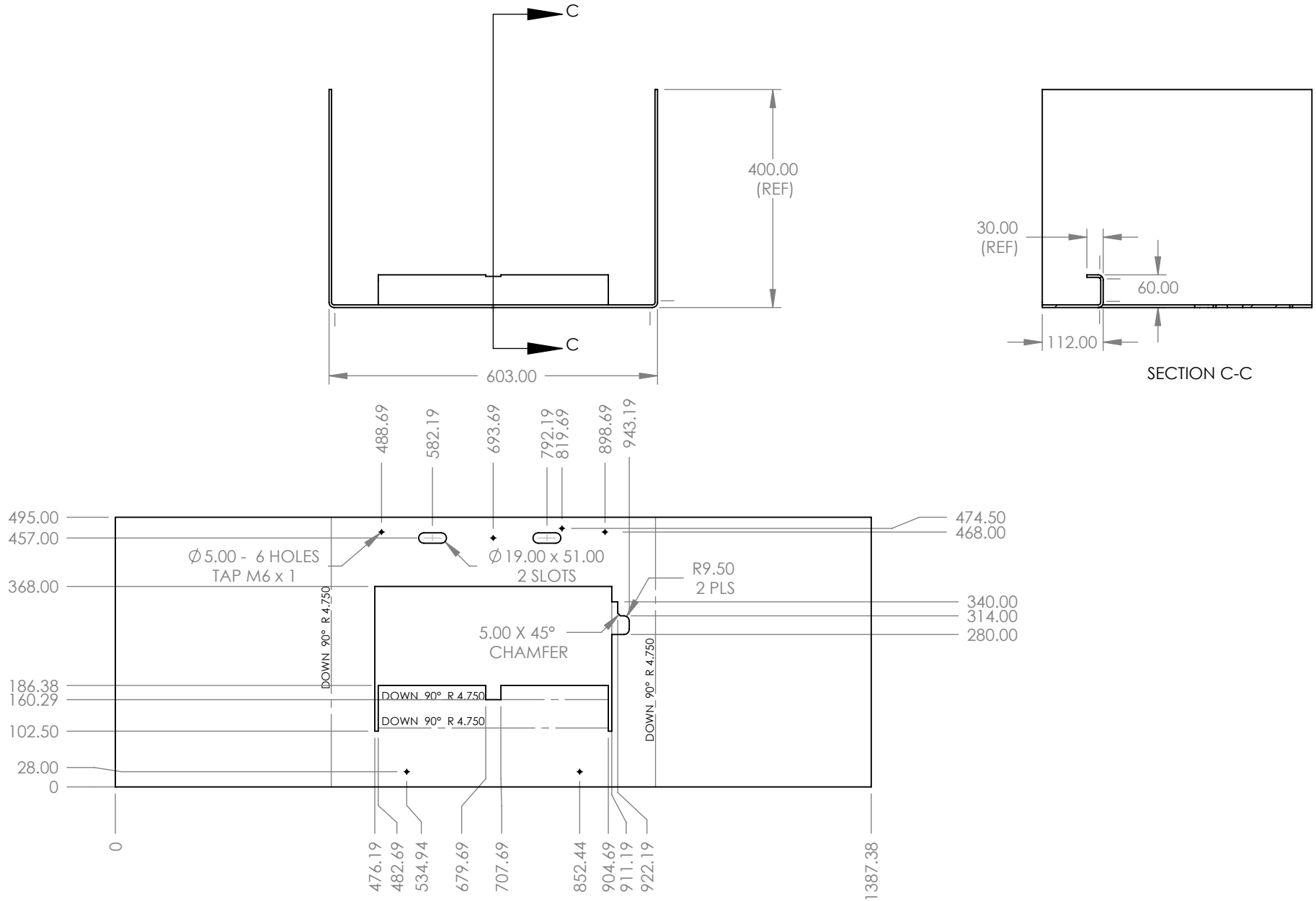

NOTE: ALTERNATE MATERIAL 3/16" HR P&O

		SCALE: 1:10	SHEET 1 OF 1
WOLF STEEL LTD	DIMENSIONS IN MILLEMETERS TOLERANCES: UNLESS OTHERWISE NOTED WHERE APPLICABLE, FLAT IS SHOWN FINISHED SIDE UP FORMED PARTS ±0.80 BLANKED PARTS ±0.15 REFERENCE DIMENSION ±1.50 ANGLES ±2°	TITLE: HOUSING, FIREBOX FRONT & SIDES	DRAWING: **W350-0543**
		MODEL: 2100	DRAWN BY: A.RIGDEN
		MATERIAL: W055-0486 4.75 mm HR P&O 4.75 x 1387.38 x 495.00	DATE: 10/28/09
		REVISION: -.	CHECKED BY: M.ACETO

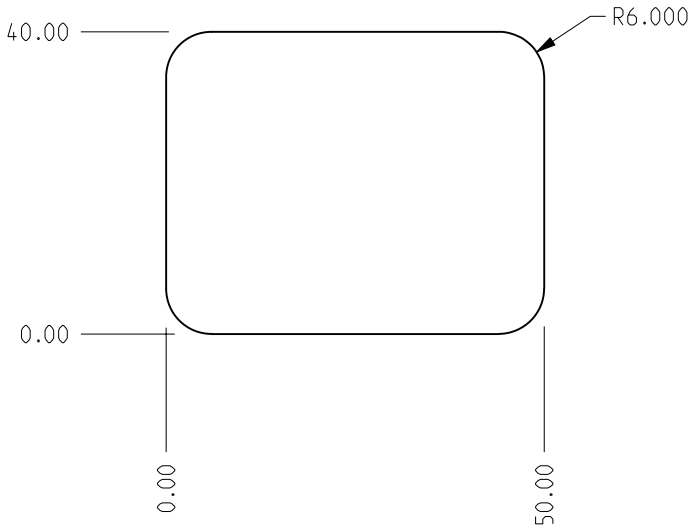

WOLF STEEL LTD.

DIMENSIONS IN MILLEMETERS
TOLERANCES:
UNLESS OTHERWISE NOTED.
WHERW APPLICATION, FLAT IS SHOWN
FINISHED SIDE UP

FORMED PARTS	±0.80
BLANKED PARTS	±0.15
REFERENCE DIMENSION	±1.50
ANGLES	±2°

TITLE:	RETAINER, BRICK (SIDE)
MODEL:	2100/2200
MATERIAL:	4.75 mm HOT ROLLED P.&O. 50.00 x 40.00
REVISION:	-

SCALE 1.000

DRAWING:	W500-0472
DRAWN BY:	A.RIGDEN
DATE:	05.11.09
CHECKED BY:	JFK

5+

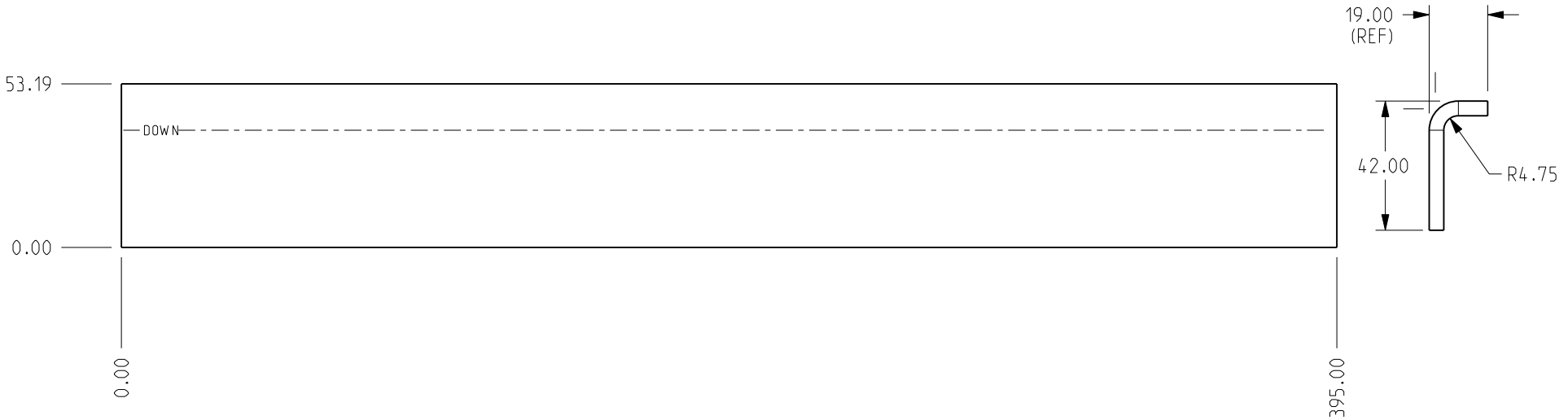

WOLF STEEL LTD.

DIMENSIONS IN MILLEMETERS
TOLERANCES:
UNLESS OTHERWISE NOTED.
WHERW APPLICATION, FLAT IS SHOWN
FINISHED SIDE UP

FORMED PARTS	±0.80
BLANKED PARTS	±0.15
REFERENCE DIMENSION	±1.50
ANGLES	±2°

TITLE:	RETAINER, BRICK (REAR)
MODEL:	2100/2200
MATERIAL:	4.75 mm HOT ROLLED P.&O. 395.00 x 53.19
REVISION:	-

SCALE 0.500

DRAWING: W500-0473
DRAWN BY: A.RIGDEN
DATE: 05.11.09
CHECKED BY: JFK

7+

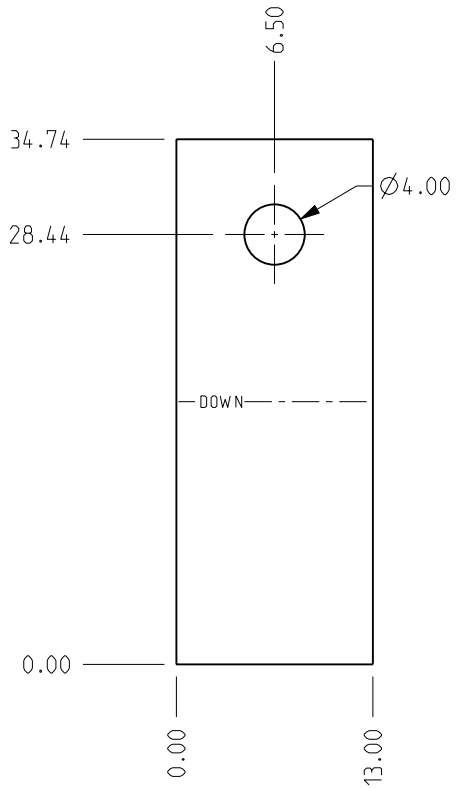

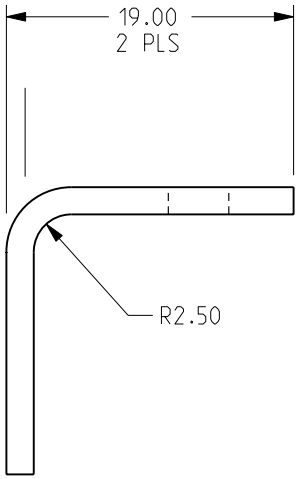

WOLF STEEL LTD.

DIMENSIONS IN MILLEMETERS
TOLERANCES:
UNLESS OTHERWISE NOTED.
WHERW APPLICATION, FLAT IS SHOWN
FINISHED SIDE UP

FORMED PARTS	±0.80
BLANKED PARTS	±0.15
REFERENCE DIMENSION	±1.50
ANGLES	±2°

TITLE:	RETAINER, S/A TUBES		SCALE 2.000
MODEL:	2100/2200		**DRAWING:** W500-0474
MATERIAL:	1.80 mm HOT ROLLED P.&O.	13.00 x 34.74	**DRAWN BY:** A.RIGDEN
REVISION:	-		**DATE:** 05.11.09
			CHECKED BY: JFK

5+

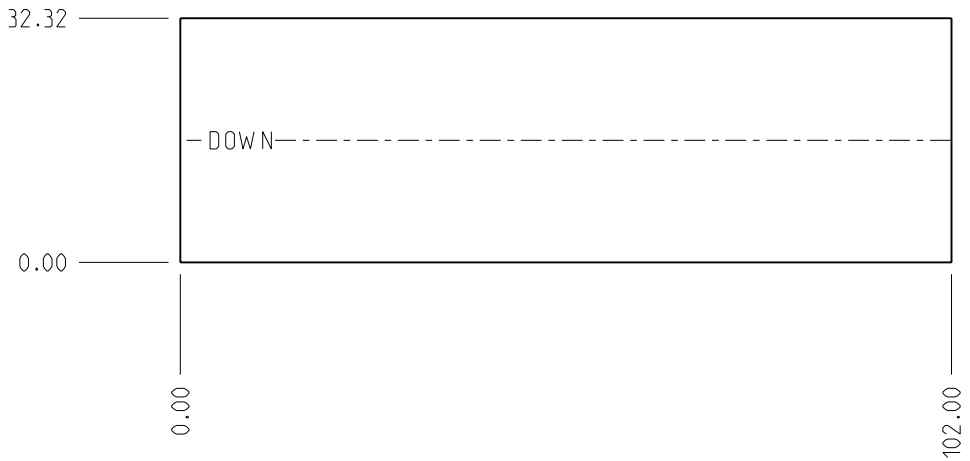

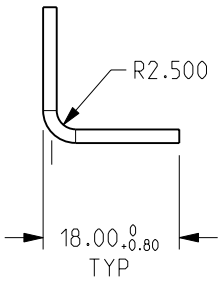

WOLF STEEL LTD.

DIMENSIONS IN MILLEMETERS
TOLERANCES:
UNLESS OTHERWISE NOTED.
WHERW APPLICATION, FLAT IS SHOWN
FINISHED SIDE UP

FORMED PARTS	±0.80
BLANKED PARTS	±0.15
REFERENCE DIMENSION	±1.50
ANGLES	±2°

TITLE:	RETAINER, BRICK (SIDE)
MODEL:	2100/2200
MATERIAL:	1.80 mm HOT ROLLED P.&O. 102.00 x 32.32
REVISION:	

SCALE 1.000
DRAWING: W500-0503
DRAWN BY: A.RIGDEN
DATE: 05.28.09
CHECKED BY: JFK

0

NOTE: USE KNOCK OUT FROM PART
NUMBER W705-0228 OR W705-0227

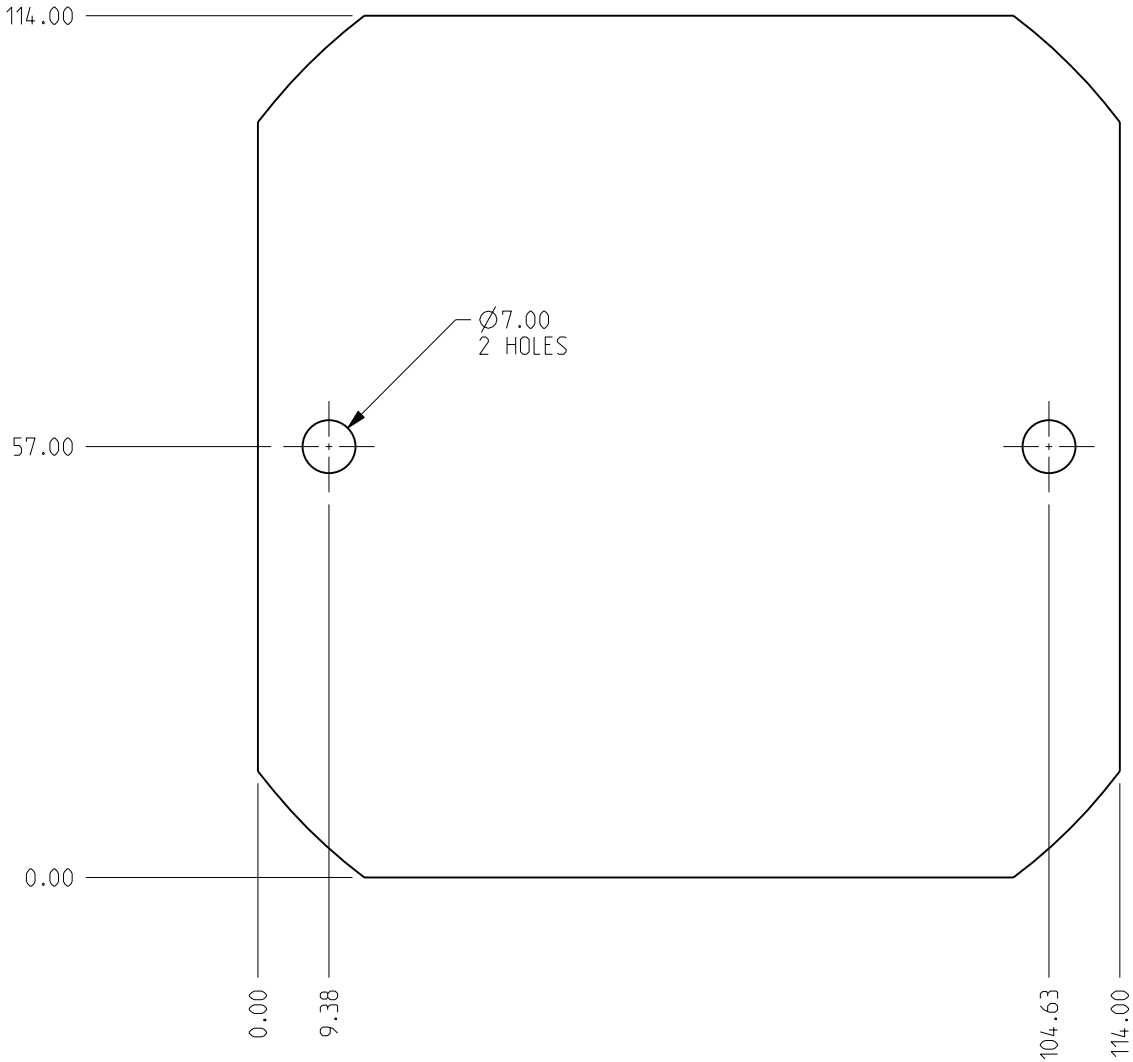

WOLF STEEL LTD.	DIMENSIONS IN MILLEMETERS TOLERANCES: UNLESS OTHERWISE NOTED. WHERW APPLICATION, FLAT IS SHOWN FINISHED SIDE UP FORMED PARTS ±0.80 BLANKED PARTS ±0.15 REFERENCE DIMENSION ±1.50 ANGLES ±2°	**TITLE:** PLUG, ASH	SCALE 1.000
		MODEL: 2100/2200	**DRAWING:** W510-0013
		MATERIAL: 6.00 mm HOT ROLLED P.&O. 114.00 x 114.00	**DRAWN BY:** A.RIGDEN
		REVISION: -	**DATE:** 05.11.09
			CHECKED BY: JFK

5+

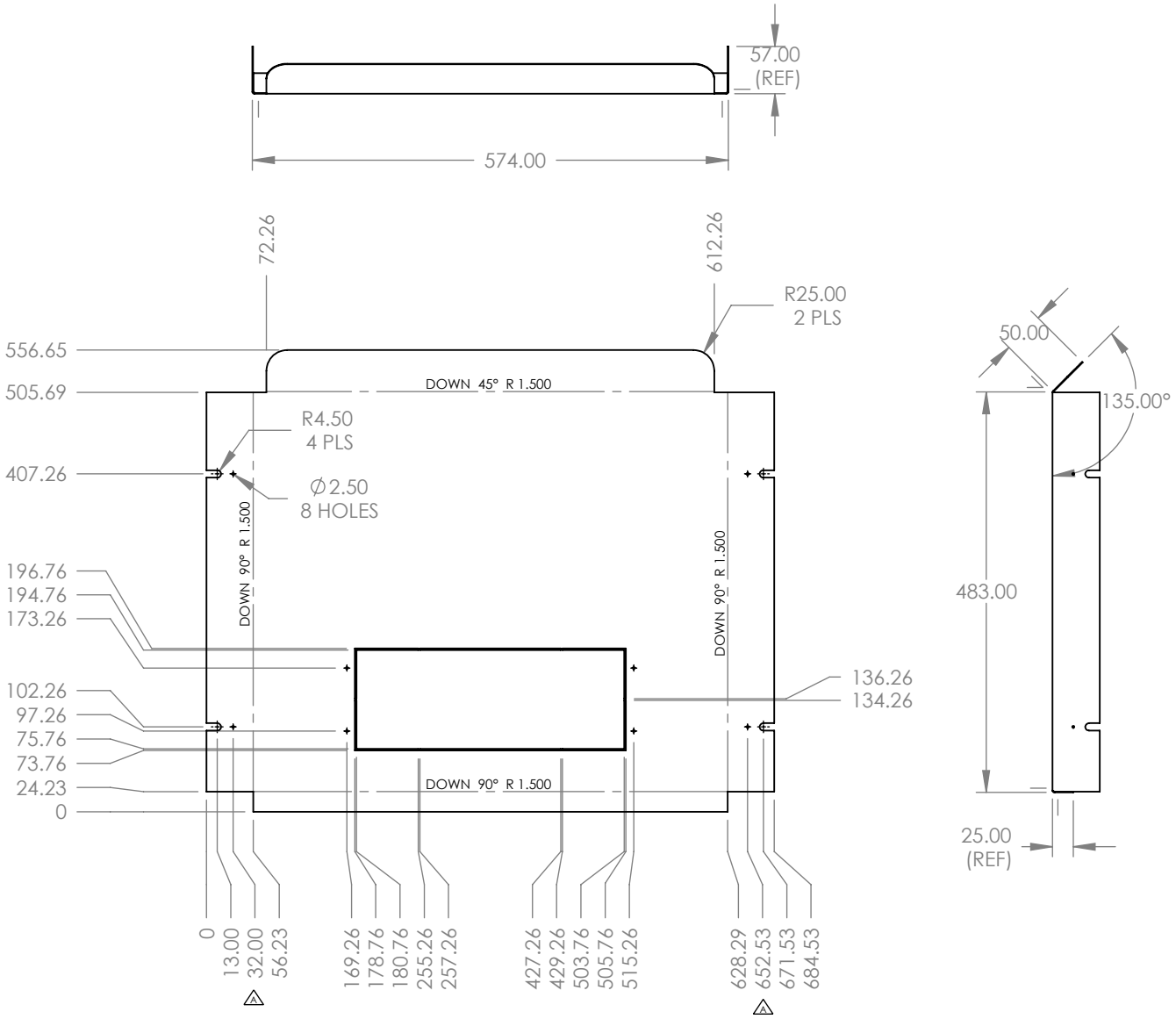

			SCALE: 1:8	SHEET 1 OF 1
WOLF STEEL LTD	DIMENSIONS IN MILLEMETERS TOLERANCES: UNLESS OTHERWISE NOTED WHERE APPLICABLE, FLAT IS SHOWN FINISHED SIDE UP FORMED PARTS ±0.80 BLANKED PARTS ±0.15 REFERENCE DIMENSION ±1.50 ANGLES ±2°	TITLE: SHIELD, HEAT		DRAWING: **W585-0324**
		MODEL: 2100/2200		DRAWN BY: A.RIGDEN
		MATERIAL: 0.90 mm HR P&O	0.9 x 684.53 x 556.65	DATE: 10/28/09
		REVISION: A	10/21/10 (AGR) MOVE HOLES	CHECKED BY: A.RIGDEN

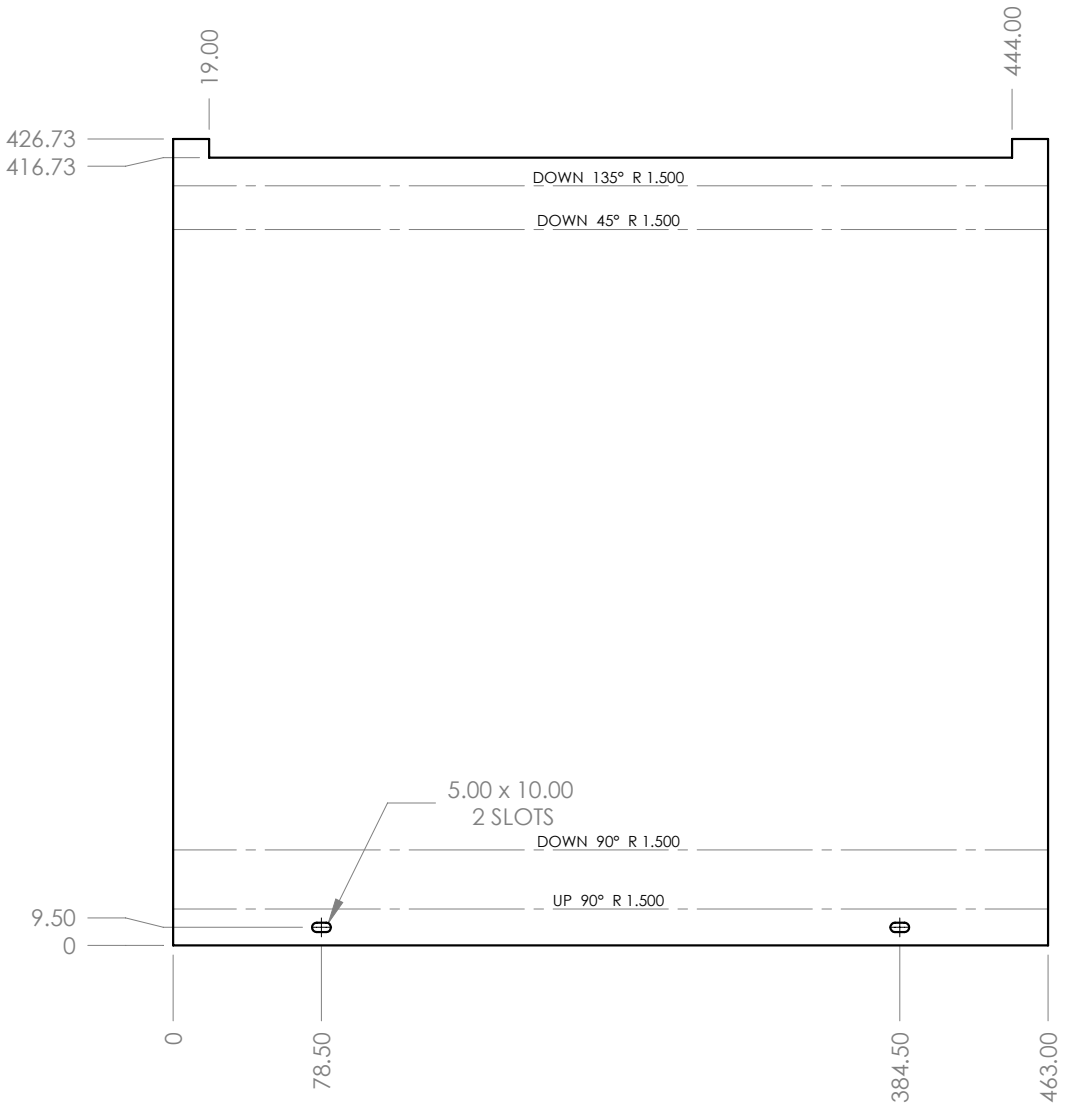

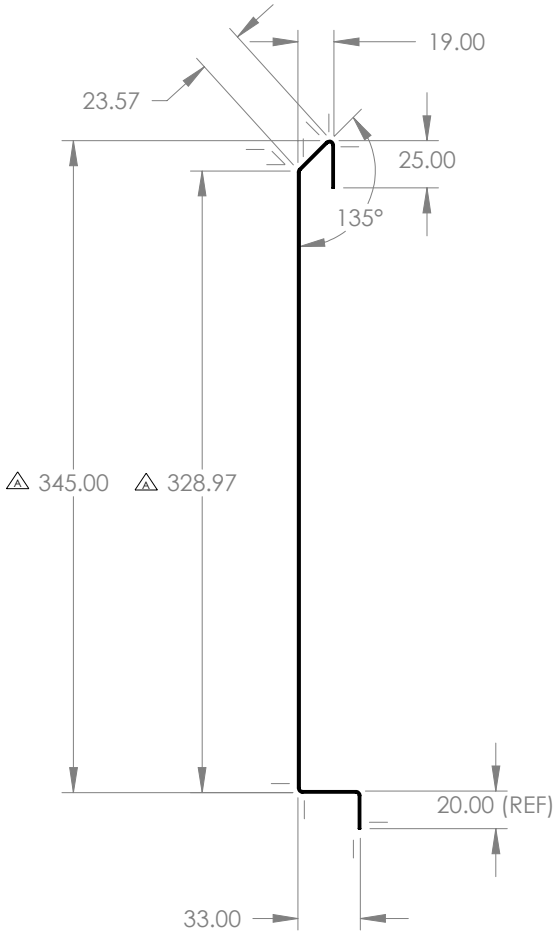

This drawing is the property of Wolf Steel LTD. or NAC. It is not to be reproduced nor used in any manner without our consent. All rights are reserved.

WOLF STEEL LTD.

NAC Napoleon Appliance Corporation

UNLESS OTHERWISE NOTED OR DEPICTED ALL DIMENSIONS ARE OUTSIDE IN INCHES

TOLERANCES:

WHERE APPLICABLE, FLAT IS SHOWN FINISHED SIDE UP

FORMED PARTS	±0.031"
BLANKED PARTS	±0.010"
REFERENCE DIMENSIONS	±0.063"
ANGLES	±2°

TITLE:	**SHIELD, HEAT (SIDE)**			MODEL:	2100	DRAWING:	**W585-0327**
MATERIAL:	0.90	HR P&O	LBS	THICKNESS:	0.9	DRAWN BY:	**A.RIGDEN**
FINISH:				SCALE: 1:8	SHEET 1 OF 1	MM/DD/YYYY:	**10/28/09**
REVISION:	**A**	**5/12/11**	(AGR) MODIFY DIMS			CHECKED BY:	JFK

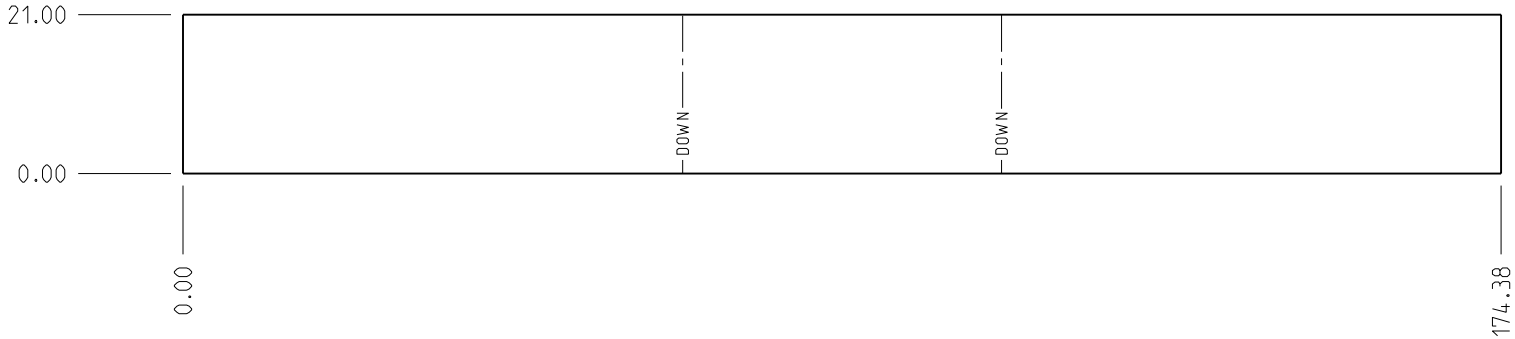

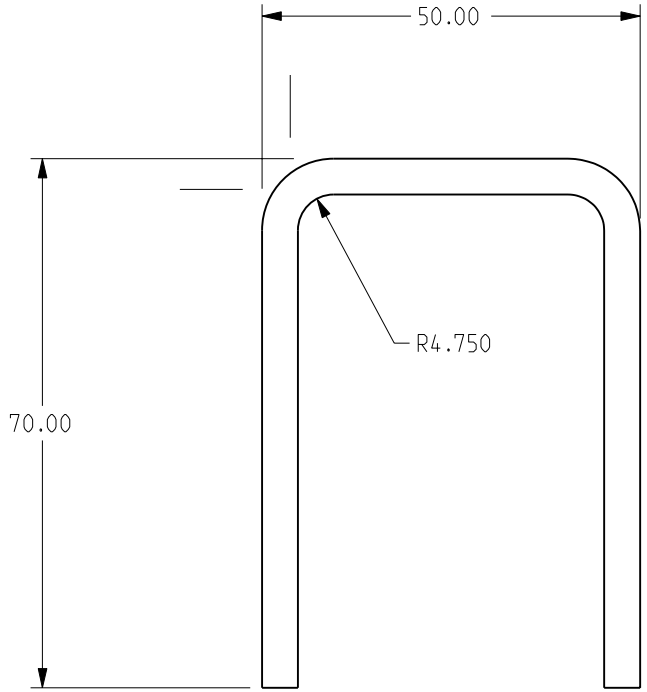

WOLF STEEL LTD.

DIMENSIONS IN MILLEMETERS
TOLERANCES:
UNLESS OTHERWISE NOTED.
WHERW APPLICATION, FLAT IS SHOWN
FINISHED SIDE UP

FORMED PARTS	±0.80
BLANKED PARTS	±0.15
REFERENCE DIMENSION	±1.50
ANGLES	±2°

TITLE:	SPACER, AIRWASH
MODEL:	2100/2200
MATERIAL:	4.75 mm HOT ROLLED P.&O. 174.38 x 21.00
REVISION:	-

SCALE 1.000

DRAWING:	W615-0115
DRAWN BY:	A.RIGDEN
DATE:	05.21.09
CHECKED BY:	JFK

0+

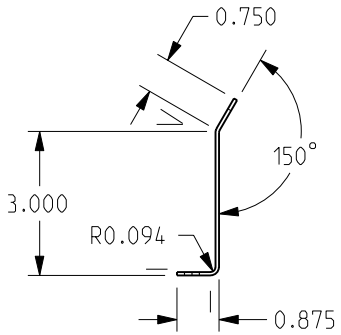

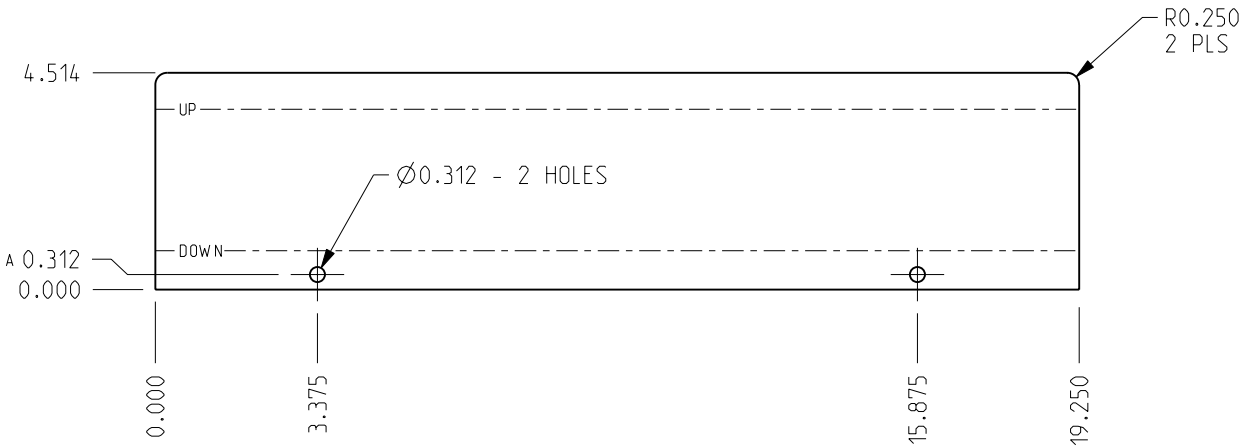

WOLF STEEL LTD.	**TOLERANCES:** UNLESS OTHERWISE NOTED WHERE APPLICABLE, FLAT IS SHOWN FINISHED SIDE UP FORMED PARTS ±0.031 BLANKED PARTS ±0.005 REFERENCE DIMENSION ±0.063 ANGLES ±2°	**TITLE:** TRAY, ASH	SCALE 0.250
		MODEL: 1450	**DRAWING:** W710-0025
		MATERIAL: 14 GA HR P&O 0.074 x 19.250 x 4.514	**DRAWN BY:** A.RIGDEN
		REVISION: A: 01.12.09 (AGR) ADD DIM	**DATE:** 07.30.08
			CHECKED BY: JFK

1

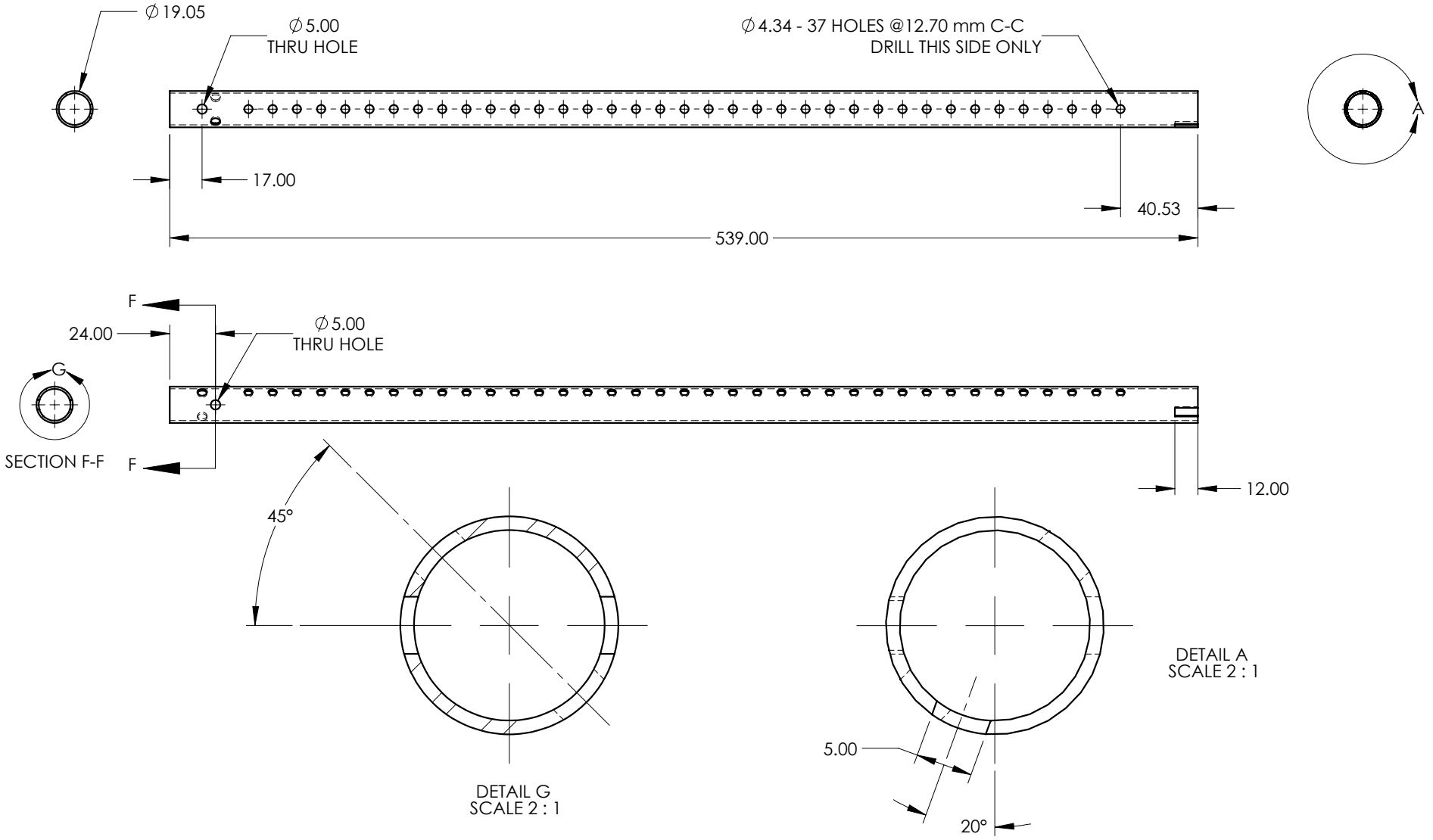

This drawing is the property of Wolf Steel LTD. or NAC. It is not to be reproduced nor used in any manner without our consent. All rights are reserved.

WOLF STEEL LTD.
NAC Napoleon Appliance Corporation

UNLESS OTHERWISE NOTED OR DEPICTED ALL DIMENSIONS ARE OUTSIDE IN (mm)

TOLERANCES:

DIMENSIONS	±1.50
REFERENCE DIMENSIONS	±3.00"
ANGLES	±2°

TITLE:	**TUBE, SECONDARY AIR (REPLACES W720-0131)**		MODEL:	2100	DRAWING: **W720-0160**
MATERIAL:	1.20mm Tubing SS 430-2b		0.28 kg		DRAWN BY: **A.RIGDEN**
FINISH:			SCALE: 1:3	SHEET 1 OF 1	MM/DD/YYYY: **2/14/12**
REVISION:	-				CHECKED BY: HANS

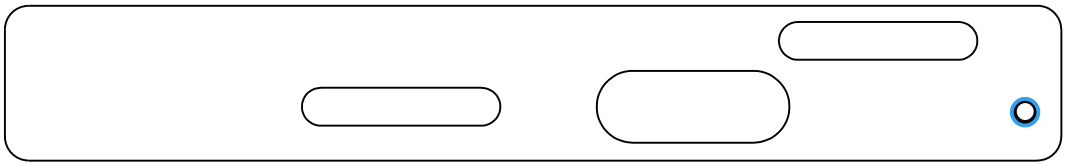

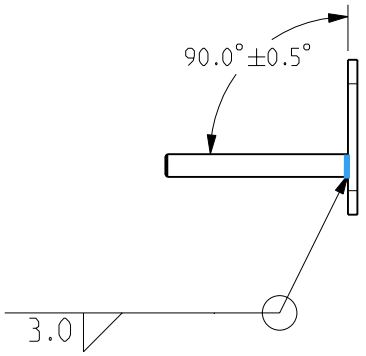

WOLF STEEL LTD.

DIMENSIONS IN MILLEMETERS
TOLERANCES:
UNLESS OTHERWISE NOTED.
WHERW APPLICATION, FLAT IS SHOWN
FINISHED SIDE UP

FORMED PARTS	±0.80
BLANKED PARTS	±0.15
REFERENCE DIMENSION	±1.50
ANGLES	±2°

TITLE:	ASSEMBLY, AIR CONTROL
MODEL:	2100/2200
MATERIAL:	
REVISION:	-

SCALE 0.500

DRAWING:	W010-2005
DRAWN BY:	A.RIGDEN
DATE:	05.11.09
CHECKED BY:	JFK

3+

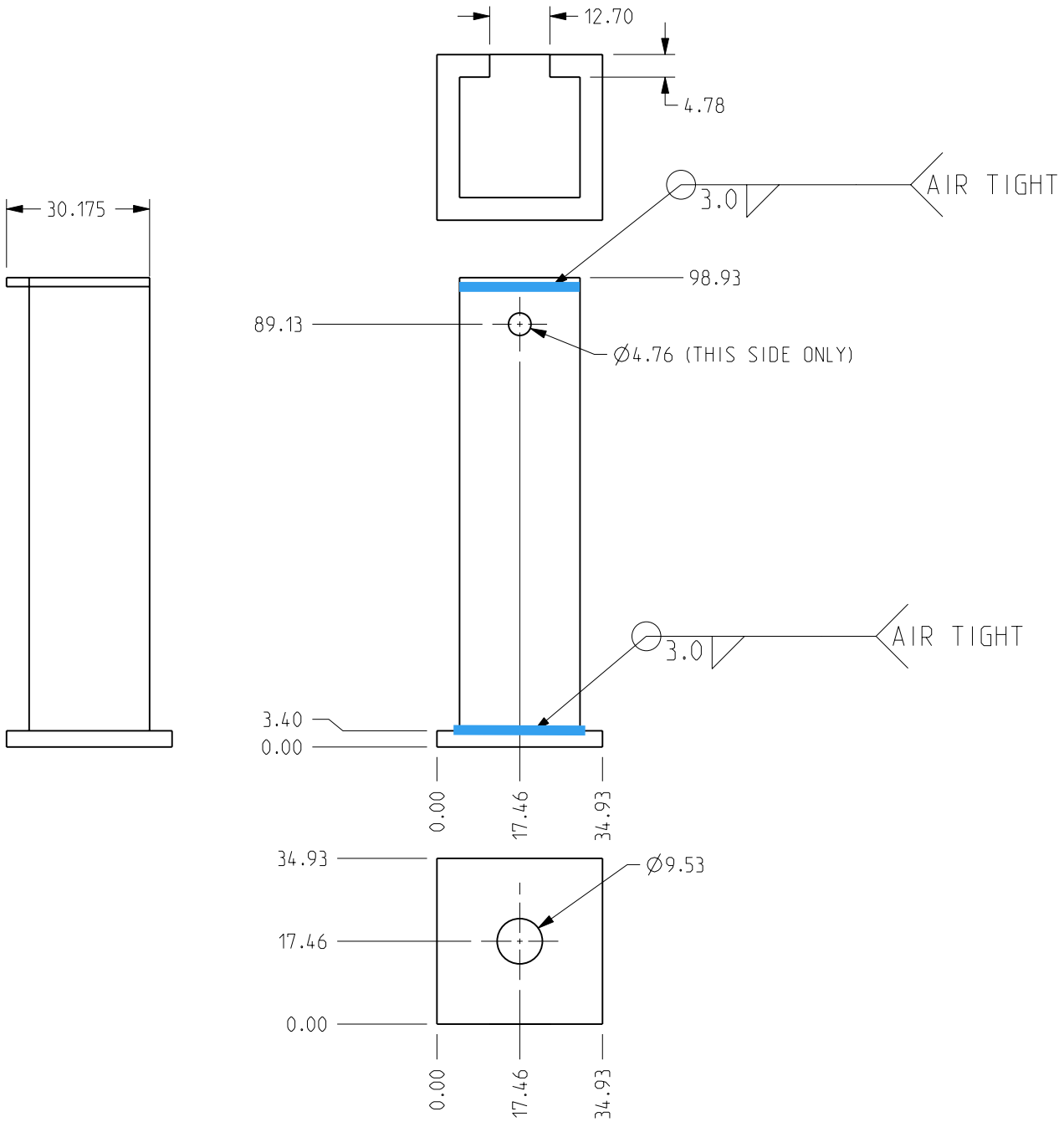

WOLF STEEL LTD.	DIMENSIONS IN MILLEMETERS TOLERANCES: UNLESS OTHERWISE NOTED. WHERW APPLICATION, FLAT IS SHOWN FINISHED SIDE UP FORMED PARTS ±0.80 BLANKED PARTS ±0.15 REFERENCE DIMENSION ±1.50 ANGLES ±2°	TITLE: ASSEMBLY, PILOT TUBE MODEL: 2100/2200 MATERIAL: 25.4mm SQ TUBE - 3.18mm WALL THICKNESS REVISION: -

SCALE 0.750
DRAWING: W010-2006
DRAWN BY: A.RIGDEN
DATE: 05.11.09
CHECKED BY: JFK

3+

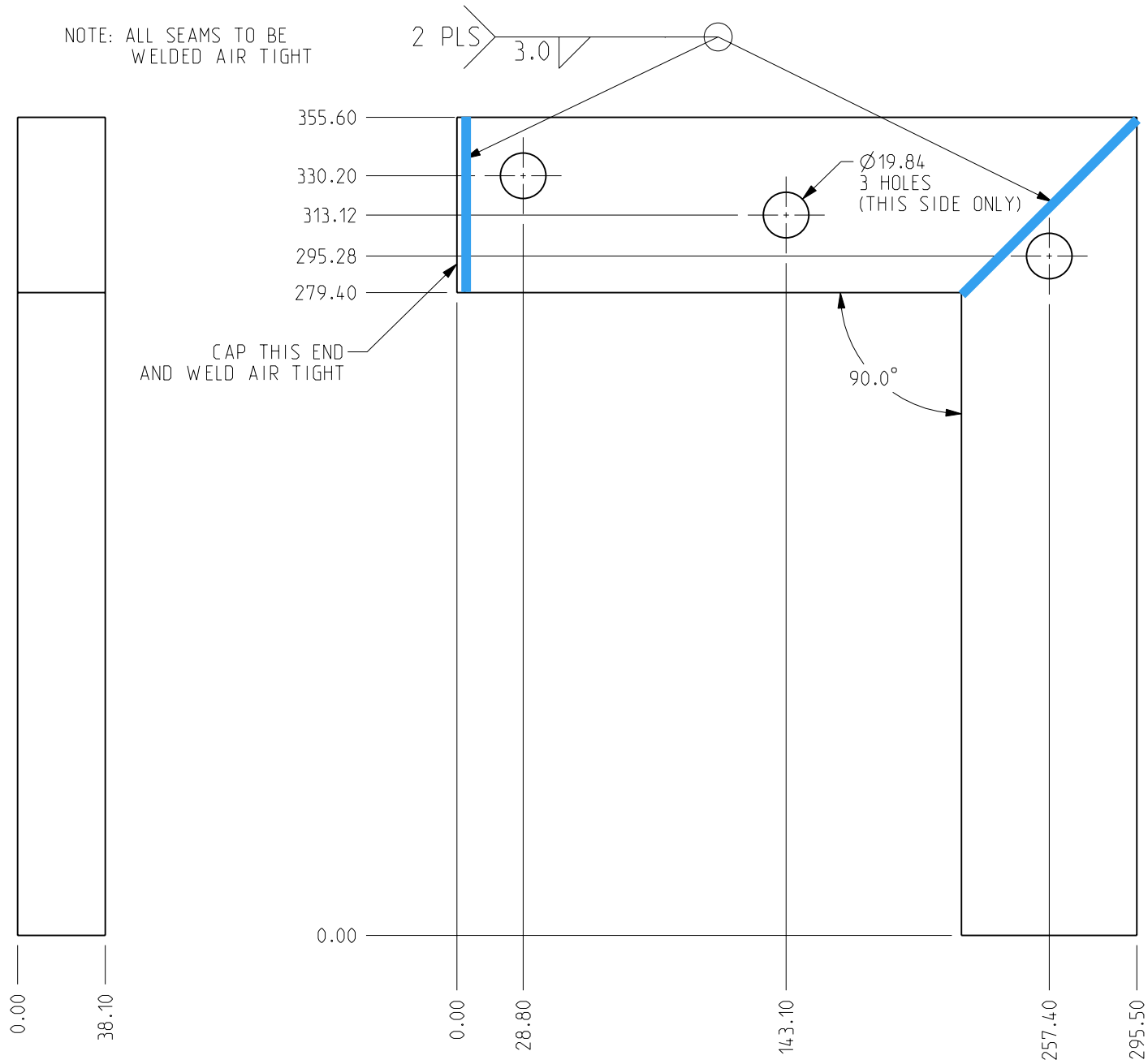

WOLF STEEL LTD.	DIMENSIONS IN MILLEMETERS TOLERANCES: UNLESS OTHERWISE NOTED. WHERW APPLICATION, FLAT IS SHOWN FINISHED SIDE UP FORMED PARTS ±0.80 BLANKED PARTS ±0.15 REFERENCE DIMENSION ±1.50 ANGLES ±2°	**TITLE:** ASSEMBLY, S/A TUBE (LS) **MODEL:** 2100 **MATERIAL:** 76.20 x 38.10 x 3.0 MILD STEEL TUBE **REVISION:** -

SCALE 0.375

DRAWING: W010-2014

DRAWN BY: A.RIGDEN

DATE: 05.11.09

CHECKED BY:

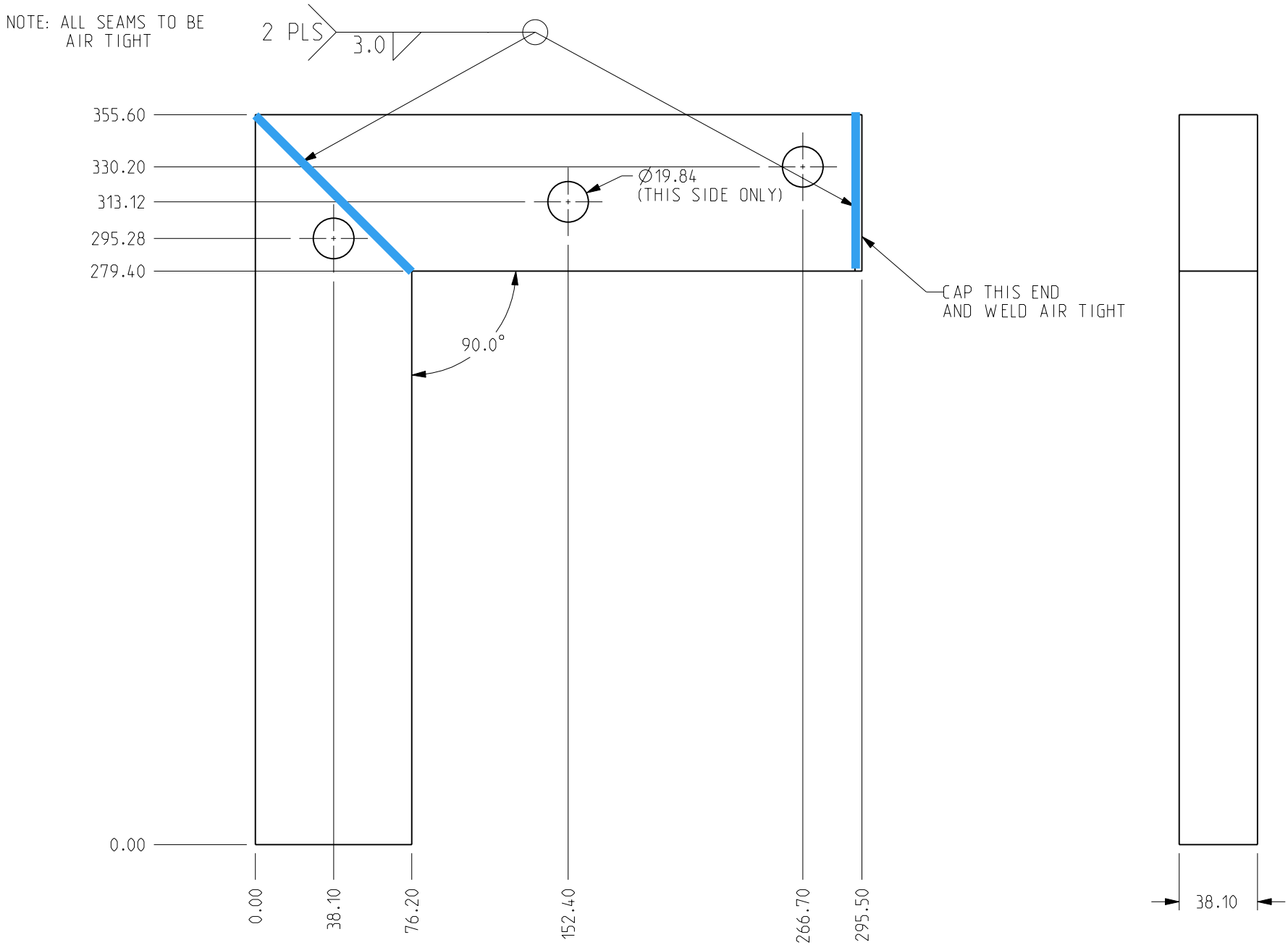

WOLF STEEL LTD.	DIMENSIONS IN MILLEMETERS TOLERANCES: UNLESS OTHERWISE NOTED. WHERW APPLICATION, FLAT IS SHOWN FINISHED SIDE UP FORMED PARTS ±0.80 BLANKED PARTS ±0.15 REFERENCE DIMENSION ±1.50 ANGLES ±2°	**TITLE:** ASSEMBLY, S/A TUBE (RS) **MODEL:** 2100 **MATERIAL:** 76.20 x 38.10 x 3.0 MILD STEEL TUBE **REVISION:** -

SCALE 0.375

DRAWING: W010-2015

DRAWN BY: A.RIGDEN

DATE: 05.11.09

CHECKED BY: JFK

2+

ITEM	QTY	DRAWING	TITLE
1	1	W 705-0229	TOP. FIREBOX
2	1	W 170-0143	COLLAR. FLUE
3	1	W 655-0296	STIFFNER. FIREBOX TOP
4	1	W 215-0130	DEFLECTOR. EXHAUST

TOP VIEW

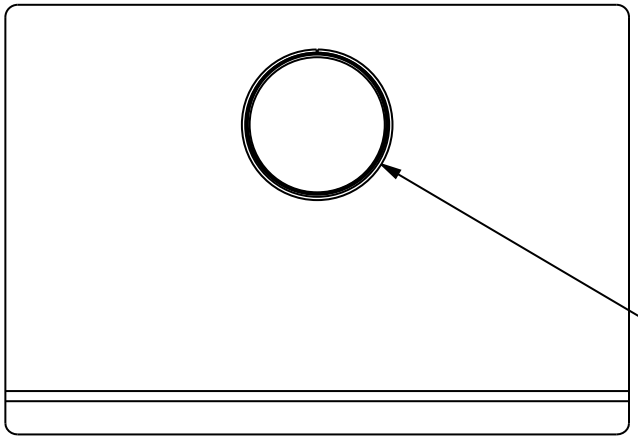

NOTE: 1. ITEM #2 MUST BE PLACED WITH [A] 3 HOLES ORIENTED AS SHOWN
2. CENTER ITEM #2 OVER HOLE IN ITEM #1 AND WELD INSIDE MUST BE GAS TIGHT

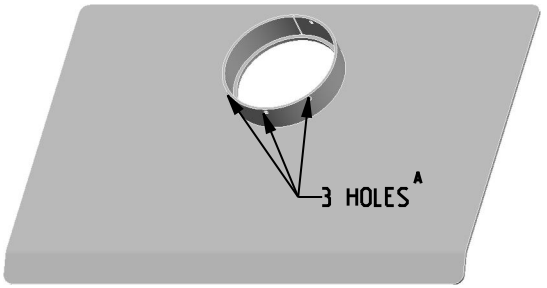

SCALE 0.100

BOTTOM VIEW

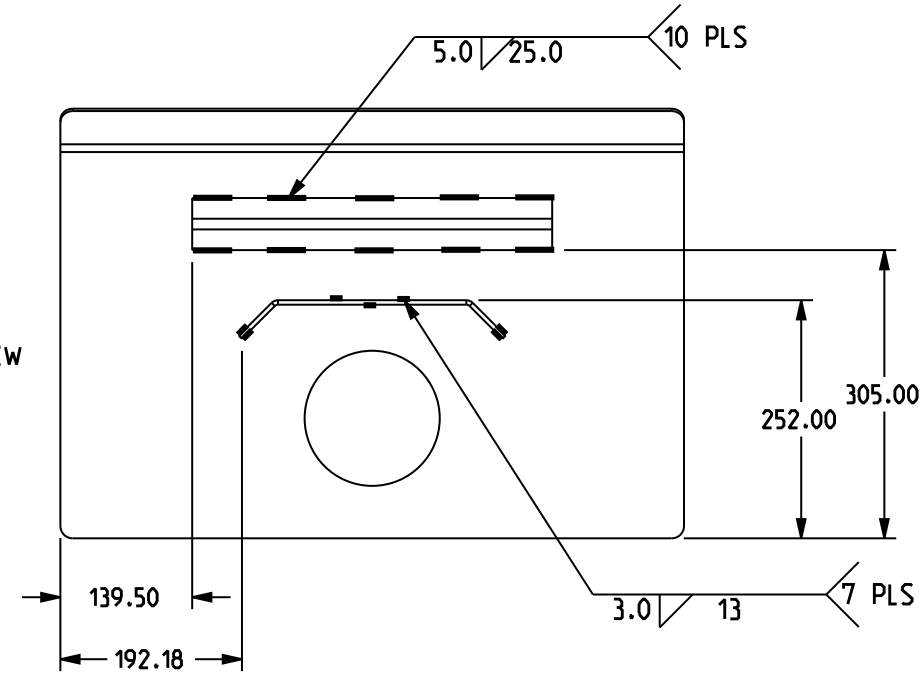

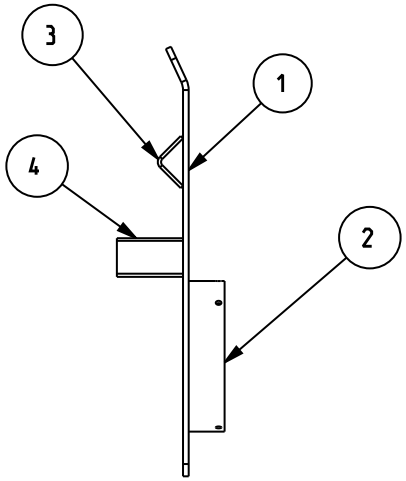

SCALE 0.125

WOLF STEEL LTD.

DIMENSIONS IN MILLIMETERS
TOLERANCES:
UNLESS OTHERWISE NOTED.
WHERW APPLICATION. FLAT IS SHOWN
FINISHED SIDE UP
FORMED PARTS ±0.80
BLANKED PARTS ±0.15
REFERENCE DIMENSION ±1.50
ANGLES ±2°

TITLE:	ASSEMBLY. WELDED TOP	DRAWING:	W010-2158
MODEL:	2100	DRAWN BY:	A. RIGDEN
MATERIAL:		DATE:	05.26.09
REVISION:	A: 07.26.10 (AGR) ADD NOTE & ADD ISO VIEW	CHECKED BY:	JFK

2

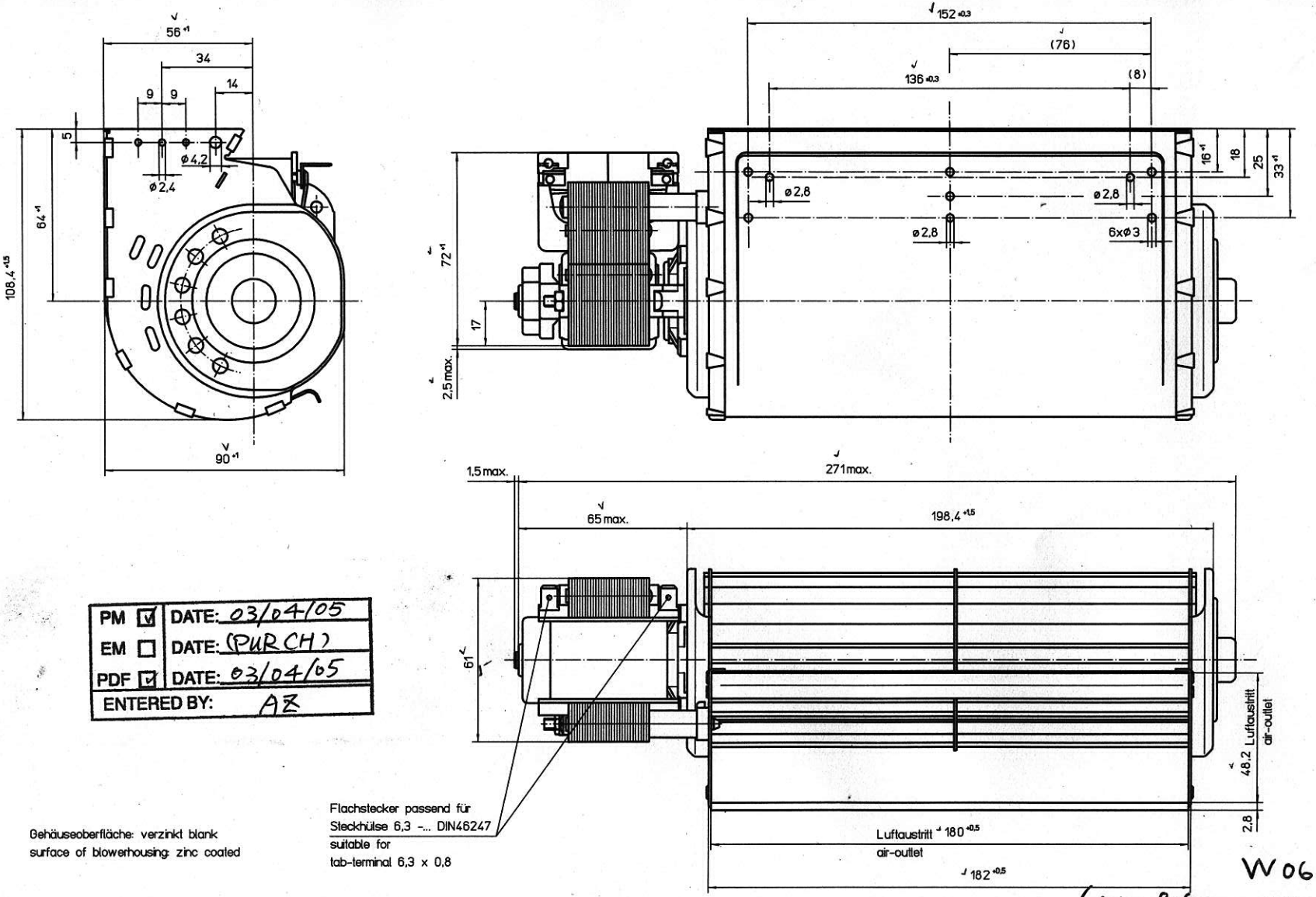

PM ☑	DATE: 03/04/05	
EM ☐	DATE: (PURCH)	
PDF ☑	DATE: 03/04/05	
ENTERED BY:	AZ	

Flachstecker passend für Steckhülse 6,3 -... DIN46247
suitable for tab-terminal 6,3 x 0,8

Gehäuseoberfläche: verzinkt blank
surface of blowerhousing: zinc coated

W062-0005
(Also Reference W062-0017)

50	abz	115V~60Hz	EM3030LH-165 abz-2 115V~60Hz 46W Z.P. Ins.Class H
Sach-End-Nr.	Kenn-buchst.	Elektrische Daten rating	Angaben für zusätzliches Motorschild information of additional motorlabel

Warning: The protection against contact with live and rotating parts and possible moisture has to be provided by the built - in conditions

Achtung! Dieses Erzeugnis ist im Sinne des GIA § 2 (Maschinenschutzgesetz) erst nach Einbau verwendungsfähig
- Sicherheitsnorm DIN 31000 (VDE 1000) beachten -
Temperaturwächter nach VDE 0631 in Motorwicklung ersetzen nicht eine erforderliche Sicherung des Gesamtgeräles

Approved
C. [signature] March 2/05

Ausg.1:

Fertigzustand		Zul. Abw. ISO 2768-mK	Oberfläche	Maßstab 1:1	Geom.-Schl.:
				Werkstoff	
		Datum	Name	Maßzeichnung Querstromlüfter QLN65/0018A59-3030LH-165 ...	
		Bearb 22.11.04	haender		
		Gepr.			
		Norm			
		ebm-papst Landshut GmbH		Zeichnungsnummer 55416 27250	Z10
1	003045	22.11.04	hae		Blatt 1
Zust.	Änderung	Datum	Name	Urspr.	Ers.f.: 5541627080 Ers.d. DIN_A2

APPENDIX 7: Operator's manual

This wood appliance needs periodic inspection and repair. It is against United States federal regulations to operate this wood appliance in a manner inconsistent with the operating instructions in this manual.

INSTALLATION AND OPERATION MANUAL

INSTALLER:
Leave this manual with the appliance.
CONSUMER:
Retain this manual for future reference.

SAFETY INFORMATION

⚠ WARNING

If the information in these instructions are not followed exactly, a fire or explosion may result causing property damage, personal injury or death. Please read the entire manual before you install and use your appliance. This heeater has not been tested with an unvented gas log set. To reduce risk of fire or injury, do not install an unvented gas log set into the heater.

- This heater can be very hot when burning.
- Combustible materials such as firewood, wet clothing, etc. placed too close can catch fire.
- Children and pets must be kept from touching the heater when it is hot.
- The chimney must be sound and free of cracks. Before installing this appliance, contact the local building or fire authority and follow their guidelines.
- Operate only with the doors tightly closed.
- Burn wood behind the log retainer directly on the firebricks.
- Do not use an elevated grate or otherwise raise the fire.
- This appliance is designed to burn natural wood only. Higher efficiencies and lower emissions generally result when burning air dried seasoned hardwoods, as compared to softwoods or to green or freshly cut hardwoods.
- Do not start a fire with chemicals or fluids such as gasoline, engine oil, etc.
- Do not burn trash or garbage, lawn clippings/waste, rubber, waste petroleum products, paints or paint thinners/solvents, plastic, materials containing asbestos, construction debris, railroad ties or treated wood, manure or animal remains, salt water driftwood or salted materials, unseasoned wood, coal, charcoal, coloured paper, cardboard, plywood or particleboard. Burning these materials may result in release of toxic fumes or render the appliance ineffective and cause smoke.
- Do not let the appliance become hot enough for any part to glow red.

Wood Stoves ONLY

- At least 14 squares inches (90.3 square centimeters) of outside air must be admitted to the room or directly to the appliance through a 4” (101.6mm) diameter pipe.
- KEEP THE STOVE TOP TEMPERATURE BELOW 700°F (371°C). Attempts to achieve heat output rates that exceed design specifications can result in steel distortion and damage.

Timberwolf® Economizer Series

(2100-1 leg model illustrated)

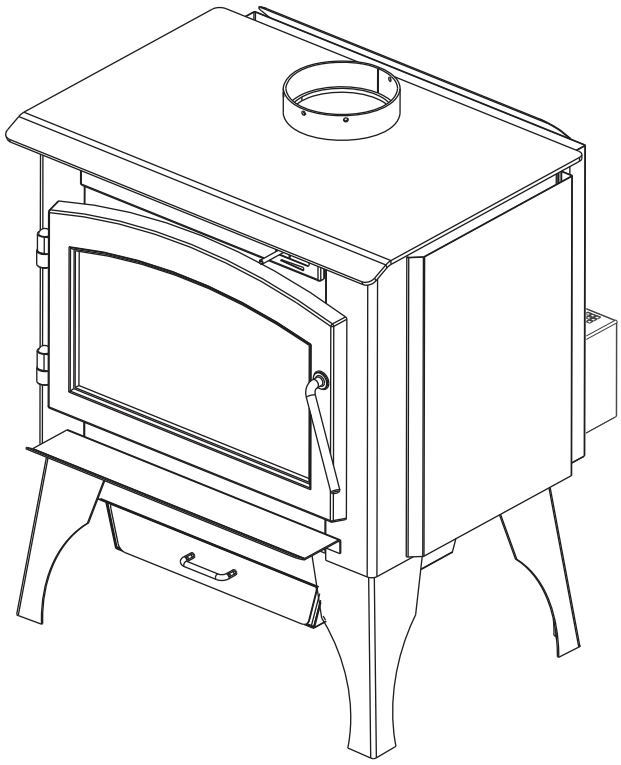

FOR INDOOR USE ONLY

U.S. ENVIRONMENTAL PROTECTION AGENCY (E.P.A.) CERTIFIED TO COMPLY WITH 2020 PARTICULATE EMISSION STANDARDS USING CORD WOOD. THIS APPLIANCE HAS BEEN TESTED BY POLYTESTS AND LISTED BY OMNI-TEST LABORATORIES, INC. TO STANDARDS: CSA B366.2, ULC S627, AND UL 1482. ASTM E3053-17; ASTM E2515-11 METHODS ALT-125 AS REFERENCED INTO 40 CFR PART 60 SUBPART AAA. OMNI REPORT NUMBER 0415WS014E.

APPLY SERIAL NUMBER LABEL FROM CARTON

Serial No. XXXXXX000000

MODEL NO.

Wolf Steel Ltd., 24 Napoleon Rd., Barrie, ON, L4M 0G8 Canada / 103 Miller Drive, Crittenden, Kentucky, USA, 41030
Phone 1 (866) 820-8686 • www.timberwolffireplaces.com • ask@timberwolffireplaces.com

safety information

⚠ WARNING

- This appliance is hot when operated and can cause severe burns if contacted.
- Any changes or alterations to this appliance or its controls can be dangerous and is prohibited.
- Do not operate appliance before reading and understanding operating instructions. Failure to operate appliance according to operating instructions could cause fire or injury.
- Before installing this appliance, contact the local building or fire authority and follow their guidelines.



- This appliance must be installed by a qualified installer. Never try to repair or replace any part of the appliance unless instructions are given in this manual. All other work should be done by a trained technician.
- Risk of burns. The appliance should be turned off and cooled before servicing.
- Do not operate without fully assembling all components. Do not install damaged, incomplete or substitute components.
- Do not let the appliance become hot enough for any part to glow red.
- Risk of cuts and abrasions. Wear protective gloves, footwear and safety glasses during installation. Sheet metal edges may be sharp.
- All wiring should be done by a qualified electrician and shall be in compliance with local codes. in the absence of local codes, use the current CSA22.1 Canadian Electric Code in Canada or the current National Electric Code ANSI/NFPA No. 70 in the United States.
- If equipped, burning your appliance with the ash dump door ajar creates a fire hazard that may result in discolouration to the door, internal damage to the appliance or a house and/or chimney fire.
- Do not connect this appliance to a chimney flue serving another appliance.
- Clothing or other flammable material should not be placed on or near the appliance. Objects placed in front of the appliance must be kept a minimum of 48” (121.9cm) away from the front face of the appliance.
- Due to high temperatures, the appliance should be located out of traffic and away from furniture and draperies.
- Even after the appliance is off, it will remain hot for an extended period of time.
- Any safety screen or guard removed for servicing must be replaced prior to operating the appliance.
- Under no circumstances should this appliance be modified.
- This appliance must not be connected to a chimney flue pipe servicing a separate solid fuel burning appliance.
- Do not operate the appliance with the glass door removed, cracked or broken. Replacement of the glass should be done by a licensed or qualified service person.
- Do not strike or slam shut the appliance glass door.
- Only doors / optional fronts certified with the appliance are to be installed on the appliance.
- If the appliance is not properly installed, a house fire may result. Do not expose the appliance to the elements (ex. rain, etc.) and keep the appliance dry at all times. Wet insulation will produce an odour when the appliance is used.
- The chimney must be sound and free of cracks. Clean your chimney a minimum of twice a year and as required.
- Children and adults should be alerted to the hazards of high surface temperature and should stay away to avoid burns or clothing ignition.
- Young children should be carefully supervised when they are in the same room as the appliance. Toddlers, young children and others may be susceptible to accidental contact burns. A physical barrier is recommended if there are at risk individuals in the house. To restrict access to an appliance or stove, install an adjustable safety gate to keep toddlers, young children and other at risk individuals out of the room and away from hot surfaces.
- Ensure you have incorporated adequate safety measures to protect infants/toddlers from touching hot surfaces.
- Check with your local hearth specialty dealer for safety screens and hearth guards to protect children from hot surfaces. These screens and guards must be fastened to the floor.
- Keep the packaging material out of reach of children and dispose of the material in a safe manner. As with all plastic bags, these are not toys and should be kept away from children and infants.
- Do not start a fire with chemicals or fluids such as gasoline, engine oil, etc.

⚠ WARNING

- Your appliance requires periodic maintenance and cleaning. Failure to maintain your appliance may lead to smoke spillage in your home.
- Ashes must be disposed in a metal container with a tight lid and placed on a non-combustible surface well away from the home or structure until completely cool.
- Ensure clearances to combustibles are maintained when building a mantel or shelves above the appliance. Elevated temperatures on the wall or in the air above the appliance can cause melting, discolouration or damage to decorations, a TV or other electronic components.

⚠ WARNING: This product can expose you to chemicals including lead and lead compounds, which are known to the State of California to cause cancer, and chemicals including carbon monoxide, which are known to the State of California to cause birth defects or other reproductive harm. For more information, go to www.P65Warnings.ca.gov.

For wood appliances:

- Lower emissions generally result when burning air dried seasoned hardwoods, as compared to softwoods or too green or freshly cut hardwoods. Burning wet unseasoned wood can cause excessive creosote accumulation. When this is ignited it can cause a chimney fire that may result in a serious house fire.
- This appliance is designed to burn natural wood only. Do not burn trash or garbage, lawn clippings / waste, rubber, waste petroleum products, paints or paint thinners / solvents, plastic, materials containing asbestos, construction debris, railroad ties or treated wood, manure or animal remains, salt water driftwood or salted materials, unseasoned wood, coal, charcoal, coloured paper, gift wrapping, cardboard, plywood or particleboard. Burning these materials may result in release of toxic fumes or render the appliance ineffective and cause smoke.
- Burn wood directly on the firebricks. Do not elevate grate or otherwise raise the fire.
- Do not store wood within appliance installation clearances or within the space required for re-fueling and ash removal.
- If equipped, the catalyst must be installed and in good working order. It is recommended that the catalyst is inspected at least three times per heating season.

EN

table of contents

1.0 general information 5
1.1 dimensions 5
1.2 specifications 6
1.3 general instructions 6
1.4 general information 7
1.5 rating plate information 8

2.0 installation planning 9
2.1 appliance placement 9
2.2 minimum clearance to combustibles 9
2.3 alcove installation 10
2.4 floor protection 10
2.5 outside air 10

3.0 installation 11
3.1 chimney 11
3.1.1 chimney connection 12
3.1.2 adding sections 13
3.1.3 typical through the ceiling 14
3.1.4 typical through the wall 15
3.1.5 typical existing masonry 16

4.0 finishing 17
4.1 leg installation 17
4.2 pedestal installation 18
4.3 door removal 18
4.4 door handle installation 19
4.5 secondary air tubes 20
4.6 brick and baffle installation 21
4.7 ash lip installation 22

5.0 optional installation 23
5.1 blower kit installation 23
5.2 ash drawer kit (EP20LAD) 24
5.3 ash pan kit (EP20PAD) 25

6.0 operation 26
6.1 optimum burn method 27
6.2 air control 27
6.3 fire extinguishers / smoke & carbon monoxide detectors 27
6.4 fuel 28
6.5 lighting a fire 28
6.5.1 flash fire 28
6.5.2 extended fire 29
6.6 smoking 29
6.7 optional fan operation 29

7.0 maintenance 30
7.1 ash removal procedures 30
7.1.1 ash removal with ash drawer 30
7.2 creosote formation and removal 31
7.3 runaway or chimney fire 31
7.4 chimney cleaning 31
7.5 door glass replacement 32
7.6 gasket replacement 32
7.7 care of glass 32
7.8 wood 33

8.0 replacement parts 34
8.1 overview 35

9.0 accessories 36
9.1 overview 36

10.0 troubleshooting 37

11.0 warranty 38

12.0 notes 39

note:

The information throughout this manual is believed to be correct at the time of printing. Wolf Steel Ltd. reserves the right to change or modify any information within this manual at any time without notice. Changes, other than editorial, are denoted by a vertical line in the margin.

1.1 dimensions

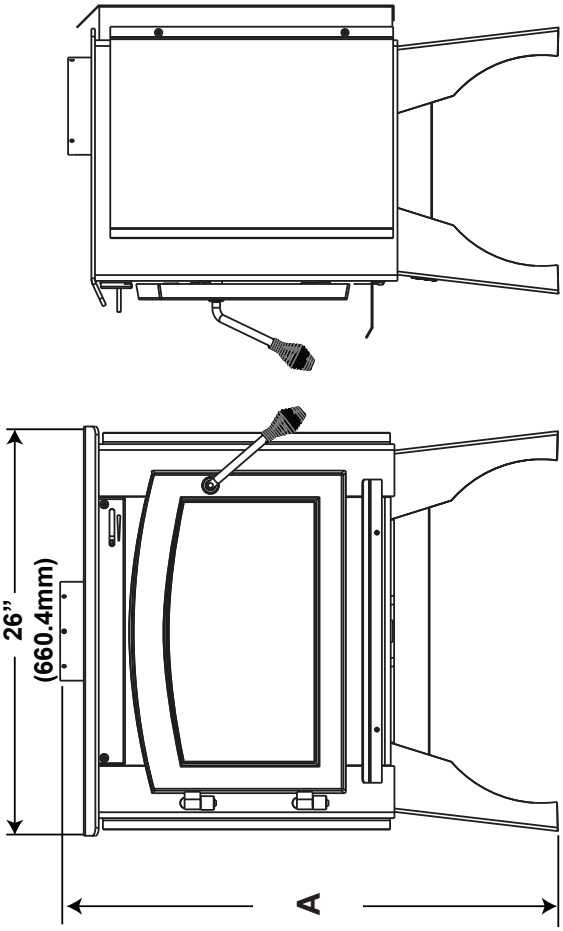

	A
Pedestal Model	29 7/8” (759mm)
Leg Model	31 1/2” (800mm)

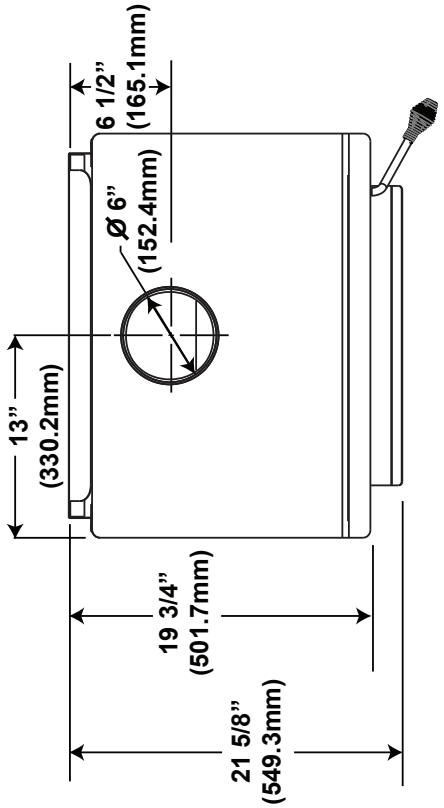

dimensions

1.2 specifications

Specifications	
Emissions	1.57 Grams / Hr
Efficiency	71%
Chamber (D.W.H)	11 5/8" x 20 7/8" x 11 5/8" (295mm x 530mm x 295mm)
Capacity	1.5 Cubic Feet (0.04 Cubic Meters)
Approx. Area Heated **	600-1800 Square Feet (56-167m²)
Maximum Heat Output ***	45,000 BTU /Hr
Heat Output *	14,582 - 30,042 BTU /Hr
Duration Low Fire **	6 Hours
Weight W/O Bricks	180 lbs (82kg)
Weight of Bricks	47 lbs (21kg)
Ideal Wood Length	16" (406mm)
Minimum Stack Height ****	15 feet (4.5m)
Efficiency Standard	B415.1-10

* As tested using test method ALT-125.

** Figures will vary considerably with individual conditions.

*** Wolf Steel Ltd. estimated realistic BTU/hr with hardwood logs and regular refueling.

**** Required in order to achieve proper draft.

1.3 general instructions

⚠ WARNING

- All wiring should be done by a qualified electrician and shall be in compliance with local codes. In the absence of local codes, use the current CSA C22.1 Canadian Electric Code (in Canada) or the ANSI / NFPA N° 70 National Electric Code in the United States.
- Burning your appliance with the ash well open or the ash door ajar creates a fire hazard and may cause internal damage to the appliance or a house and/or chimney fire.
- Do not connect this appliance to a chimney flue serving another appliance. Do not connect to any air distribution duct or system.
- Provide adequate clearance for servicing and operating the appliance.
- Provide adequate ventilation.
- Never obstruct the front opening of the appliance.
- Objects placed in front of the appliance must be kept a minimum of 48” (121.9cm) from the front face of the appliance.
- Do not install in a mobile home.

- Before beginning your installation, consult with your local building code agency or fire officials and insurance representative to ensure compliance.

- Non-toxic smoke will be emitted during the paint curing process, to help dissipate the smoke open a window near the appliance.

- Remove any dust or debris off the top of the appliance before firing the appliance as the paint will become soft as the appliance heats up and will harden as the appliance cures. To cure the paint on your appliance burn your appliance moderately hot during the first few fires.

- To keep the gasket from sticking to the appliance as the paint is curing, periodically open the door every 5-10 minutes.

- For the first two weeks use generous amounts of fuel and burn the appliance with the damper wide open for an hour as the appliance goes through a process of eliminating moisture in the steel and firebricks. The initial heat output will be reduced while the moisture is being drawn from the appliance and it will be necessary to build several hot fires to remove this moisture. **DURING THIS PROCESS DO NOT OVERFIRE THE APPLIANCE. REDUCE THE AMOUNT OF AIR COMING INTO THE APPLIANCE IF THE APPLIANCE OR CHIMNEY BECOMES RED.**

1.4 general information

⚠ WARNING

- Do not operate this appliance without the legs or pedestal installed.

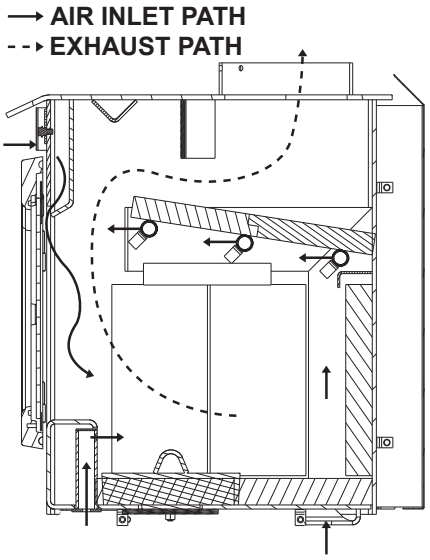

This model was specifically designed over many months of research to meet the 2020 U.S.A. EPA particulate emission standards and has been extensively tested in Canadian laboratories. This system is the most efficient, simple and trouble free we know and works as follows:

Secondary air from the rear hole travels up the back in the secondary air housing to the manifold located at the top and shoots out laterally to oxidize the gases below the smoke exit.

The lower combustion chamber is lined with high temperature firebricks on 2 sides, the back and across the bottom, with a layer of fibre baffles at the top to maintain a high temperature in the combustion chamber so that gases mixing with the preheated air from the secondary air manifold tube are easily ignited and burned. The appliance sides and back are shielded to direct the heat upwards and forwards into the room.

Be sure to provide sufficient combustion air. There are many other appliances in your home competing for air such as: a kitchen range hood, forced air heating devices, clothes dryer or a bathroom exhaust fan.

After extended periods of non-operation such as following a vacation or a warm weather season, the appliance may emit a slight odour for a few hours. This is caused by dust particles on the firebox burning off. Open a window to sufficiently ventilate the room.

If you experience smoking problems, you may been to open a door, a window or otherwise provide some method of supplying combustion air to the appliance.

NATIONAL FIREPLACE INSTITUTE NFI CERTIFIED www.nficertified.org

We suggest that our woodburning hearth products be installed and serviced by professionals who are certified in the U.S. by the National Fireplace Institute® (NFI) as NFI Woodburning Specialists or who are certified in Canada by Wood Energy Technical Training (WETT).

Wood Energy Technical Training www.wettinc.ca

Do not use makeshift compromises during installation. Do not block or restrict air, grille or louvre openings! Do not add a hood.
Burning your appliance with the door open or ajar creates a fire hazard that may result in a house and/or chimney fire.
All venting connections must be in compliance with the chimney manufacturers installation instructions. Clearances referred to throughout this manual are the minimum requirements.

Your appliance must be installed in accordance with all national and local building code standards and the standard of Chimney and Appliances, Vents and Solid Fuel Burning Appliances NFPA #211. Consult the authority having jurisdiction (such as municipal building department, fire department, fire prevention bureau, etc.) to determine the need to obtain a permit. If you are in doubt about the proper installation for your situation, contact your dealer or local building or fire official. The manufacturer does not guarantee that this appliance and its options will completely heat your entire home.

Expansion / contraction noises during heating up and cooling down cycles are normal and to be expected.

It is recommended that in all cases, the appliance be secured to the floor. Use the pallet packing brackets to accomplish this.

dimensions

1.5 rating plate information

This illustration is for reference only. Refer to the rating plate on the appliance for accurate information

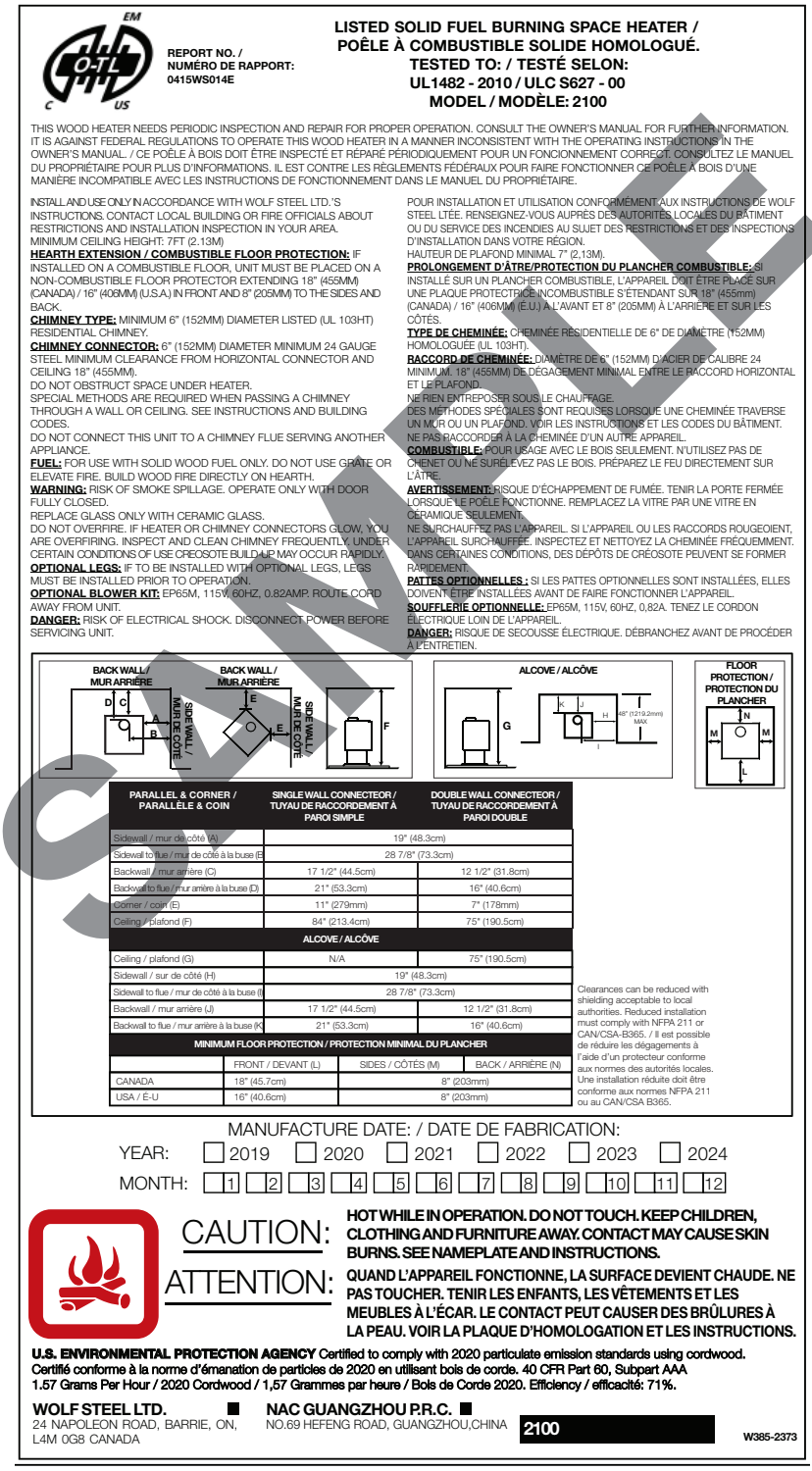

REPORT NO. / NUMÉRO DE RAPPORT: 0415WS014E

LISTED SOLID FUEL BURNING SPACE HEATER / POÊLE À COMBUSTIBLE SOLIDE HOMOLOGUÉ.
TESTED TO: / TESTÉ SELON:
UL1482 - 2010 / ULC S627 - 00
MODEL / MODÈLE: 2100

THIS WOOD HEATER NEEDS PERIODIC INSPECTION AND REPAIR FOR PROPER OPERATION. CONSULT THE OWNER'S MANUAL FOR FURTHER INFORMATION. IT IS AGAINST FEDERAL REGULATIONS TO OPERATE THIS WOOD HEATER IN A MANNER INCONSISTENT WITH THE OPERATING INSTRUCTIONS IN THE OWNER'S MANUAL. / CE POÊLE À BOIS DOIT ÊTRE INSPECTÉ ET RÉPARÉ PÉRIODIQUEMENT POUR UN FONCIONNEMENT CORRECT. CONSULTEZ LE MANUEL DU PROPRIÉTAIRE POUR PLUS D'INFORMATIONS. IL EST CONTRE LES RÈGLEMENTS FÉDÉRAUX POUR FAIRE FONCTIONNER CE POÊLE À BOIS D'UNE MANIÈRE INCOMPATIBLE AVEC LES INSTRUCTIONS DE FONCTIONNEMENT DANS LE MANUEL DU PROPRIÉTAIRE.

INSTALL AND USE ONLY IN ACCORDANCE WITH WOLF STEEL LTD.'S INSTRUCTIONS. CONTACT LOCAL BUILDING OR FIRE OFFICIALS ABOUT RESTRICTIONS AND INSTALLATION INSPECTION IN YOUR AREA.
MINIMUM CEILING HEIGHT: 7FT (2.13M)
HEARTH EXTENSION / COMBUSTIBLE FLOOR PROTECTION: IF INSTALLED ON A COMBUSTIBLE FLOOR, UNIT MUST BE PLACED ON A NON-COMBUSTIBLE FLOOR PROTECTOR EXTENDING 18" (455MM) (CANADA) / 16" (406MM) (U.S.A.) IN FRONT AND 8" (205MM) TO THE SIDES AND BACK.
CHIMNEY TYPE: MINIMUM 6" (152MM) DIAMETER LISTED (UL 103HT) RESIDENTIAL CHIMNEY.
CHIMNEY CONNECTOR: 6" (152MM) DIAMETER MINIMUM 24 GAUGE STEEL MINIMUM CLEARANCE FROM HORIZONTAL CONNECTOR AND CEILING 18" (455MM).
DO NOT OBSTRUCT SPACE UNDER HEATER.
SPECIAL METHODS ARE REQUIRED WHEN PASSING A CHIMNEY THROUGH A WALL OR CEILING. SEE INSTRUCTIONS AND BUILDING CODES.
DO NOT CONNECT THIS UNIT TO A CHIMNEY FLUE SERVING ANOTHER APPLIANCE.
FUEL: FOR USE WITH SOLID WOOD FUEL ONLY. DO NOT USE GRATE OR ELEVATE FIRE. BUILD WOOD FIRE DIRECTLY ON HEARTH.
WARNING: RISK OF SMOKE SPILLAGE. OPERATE ONLY WITH DOOR FULLY CLOSED.
REPLACE GLASS ONLY WITH CERAMIC GLASS.
DO NOT OVERFIRE. IF HEATER OR CHIMNEY CONNECTORS GLOW, YOU ARE OVERFIRING. INSPECT AND CLEAN CHIMNEY FREQUENTLY. UNDER CERTAIN CONDITIONS OF USE CREOSOTE BUILD UP MAY OCCUR RAPIDLY.
OPTIONAL LEGS: IF TO BE INSTALLED WITH OPTIONAL LEGS, LEGS MUST BE INSTALLED PRIOR TO OPERATION.
OPTIONAL BLOWER KIT: EP65M, 115V, 60HZ, 0.82AMP. ROUTE CORD AWAY FROM UNIT.
DANGER: RISK OF ELECTRICAL SHOCK. DISCONNECT POWER BEFORE SERVICING UNIT.

POUR INSTALLATION ET UTILISATION CONFORMÉMENT AUX INSTRUCTIONS DE WOLF STEEL LTÉE. RENSEIGNEZ-VOUS AUPRÈS DES AUTORITÉS LOCALES DU BÂTIMENT OU DU SERVICE DES INCENDIES AU SUJET DES RESTRICTIONS ET DES INSPECTIONS D'INSTALLATION DANS VOTRE RÉGION.
HAUTEUR DE PLAFOND MINIMAL 7" (2,13M).
PROLONGEMENT D'ÂTRE/PROTECTION DU PLANCHER COMBUSTIBLE: SI INSTALLÉ SUR UN PLANCHER COMBUSTIBLE, L'APPAREIL DOIT ÊTRE PLACÉ SUR UNE PLAQUE PROTECTRICE INCOMBUSTIBLE S'ÉTENDANT SUR 18" (455mm) (CANADA) / 16" (406MM) (É.U.) À L'AVANT ET 8" (205MM) À L'ARRIÈRE ET SUR LES CÔTÉS.
TYPE DE CHEMINÉE: CHEMINÉE RÉSIDENTIELLE DE 6" DE DIAMÈTRE (152MM) HOMOLOGUÉE (UL 103HT).
RACCORD DE CHEMINÉE: DIAMÈTRE DE 6" (152MM) D'ACIER DE CALIBRE 24 MINIMUM. 18" (455MM) DE DÉGAGEMENT MINIMAL ENTRE LE RACCORD HORIZONTAL ET LE PLAFOND.
NE RIEN ENTREPOSER SOUS LE CHAUFFAGE.
DES MÉTHODES SPÉCIALES SONT REQUISES LORSQUE UNE CHEMINÉE TRAVERSE UN MUR OU UN PLAFOND. VOIR LES INSTRUCTIONS ET LES CODES DU BÂTIMENT.
NE PAS RACCORDER À LA CHEMINÉE D'UN AUTRE APPAREIL.
COMBUSTIBLE: POUR USAGE AVEC LE BOIS SEULEMENT. N'UTILISEZ PAS DE CHENET OU NE SURÉLEVEZ PAS LE BOIS. PRÉPAREZ LE FEU DIRECTEMENT SUR L'ÂTRE.
AVERTISSEMENT: RISQUE D'ÉCHAPPEMENT DE FUMÉE. TENIR LA PORTE FERMÉE LORSQUE LE POÊLE FONCTIONNE. REMPLACEZ LA VITRE PAR UNE VITRE EN CÉRAMIQUE SEULEMENT.
NE SURCHAUFFEZ PAS L'APPAREIL. SI L'APPAREIL OU LES RACCORDS ROUGEOIENT, L'APPAREIL SURCHAUFFÉE. INSPECTEZ ET NETTOYEZ LA CHEMINÉE FRÉQUEMMENT. DANS CERTAINES CONDITIONS, DES DÉPÔTS DE CRÉOSOTE PEUVENT SE FORMER RAPIDEMENT.
PATTES OPTIONNELLES : SI LES PATTES OPTIONNELLES SONT INSTALLÉES, ELLES DOIVENT ÊTRE INSTALLÉES AVANT DE FAIRE FONCTIONNER L'APPAREIL.
SOUFFLERIE OPTIONNELLE: EP65M, 115V, 60HZ, 0,82A. TENEZ LE CORDON ÉLECTRIQUE LOIN DE L'APPAREIL.
DANGER: RISQUE DE SECOUSSE ÉLECTRIQUE. DÉBRANCHEZ AVANT DE PROCÉDER À L'ENTRETIEN.

PARALLEL & CORNER / PARALLÈLE & COIN	SINGLE WALL CONNECTEOR / TUYAU DE RACCORDEMENT À PAROI SIMPLE	DOUBLE WALL CONNECTEOR / TUYAU DE RACCORDEMENT À PAROI DOUBLE
Sidewall / mur de côté (A)	19" (48.3cm)	
Sidewall to flue / mur de côté à la buse (B	28 7/8" (73.3cm)	
Backwall / mur arrière (C)	17 1/2" (44.5cm)	12 1/2" (31.8cm)
Backwall to flue / mur arrière à la buse (D)	21" (53.3cm)	16" (40.6cm)
Corner / coin (E)	11" (279mm)	7" (178mm)
Ceiling / plafond (F)	84" (213.4cm)	75" (190.5cm)
ALCOVE / ALCÔVE		
Ceiling / plafond (G)	N/A	75" (190.5cm)
Sidewall / sur de côté (H)	19" (48.3cm)	
Sidewall to flue / mur de côté à la buse (I	28 7/8" (73.3cm)	
Backwall / mur arrière (J)	17 1/2" (44.5cm)	12 1/2" (31.8cm)
Backwall to flue / mur arrière à la buse (K	21" (53.3cm)	16" (40.6cm)

MINIMUM FLOOR PROTECTION / PROTECTION MINIMAL DU PLANCHER			
	FRONT / DEVANT (L)	SIDES / CÔTÉS (M)	BACK / ARRIÈRE (N)
CANADA	18" (45.7cm)	8" (203mm)	
USA / É-U	16" (40.6cm)	8" (203mm)	

Clearances can be reduced with shielding acceptable to local authorities. Reduced installation must comply with NFPA 211 or CAN/CSA-B365. / Il est possible de réduire les dégagements à l'aide d'un protecteur conforme aux normes des autorités locales. Une installation réduite doit être conforme aux normes NFPA 211 ou au CAN/CSA B365.

MANUFACTURE DATE: / DATE DE FABRICATION:
YEAR: ☐ 2019 ☐ 2020 ☐ 2021 ☐ 2022 ☐ 2023 ☐ 2024
MONTH: ☐1 ☐2 ☐3 ☐4 ☐5 ☐6 ☐7 ☐8 ☐9 ☐10 ☐11 ☐12

CAUTION: **HOT WHILE IN OPERATION. DO NOT TOUCH. KEEP CHILDREN, CLOTHING AND FURNITURE AWAY. CONTACT MAY CAUSE SKIN BURNS. SEE NAMEPLATE AND INSTRUCTIONS.**

ATTENTION: **QUAND L'APPAREIL FONCTIONNE, LA SURFACE DEVIENT CHAUDE. NE PAS TOUCHER. TENIR LES ENFANTS, LES VÊTEMENTS ET LES MEUBLES À L'ÉCAR. LE CONTACT PEUT CAUSER DES BRÛLURES À LA PEAU. VOIR LA PLAQUE D'HOMOLOGATION ET LES INSTRUCTIONS.**

U.S. ENVIRONMENTAL PROTECTION AGENCY Certified to comply with 2020 particulate emission standards using cordwood.
Certifié conforme à la norme d'émanation de particles de 2020 en utilisant bois de corde. 40 CFR Part 60, Subpart AAA
1.57 Grams Per Hour / 2020 Cordwood / 1,57 Grammes par heure / Bois de Corde 2020. Efficiency / efficacité: 71%.

WOLF STEEL LTD. ■ 24 NAPOLEON ROAD, BARRIE, ON, L4M 0G8 CANADA
NAC GUANGZHOU P.R.C. ■ NO.69 HEFENG ROAD, GUANGZHOU,CHINA
2100
W385-2373

SAMPLE

note:

The rating plate must remain with the appliance at all times. It must not be removed.

2.1 appliance placement

Have an authorized dealer install the appliance. If you install the appliance yourself, have your dealer review your installation plans and/or installation. Draw out a detailed plan of the installation including dimensions and verify the dimensions with the requirements listed in this manual.

You may wish to adjust the appliance position slightly to ensure the vent does not intersect with a framing member. Appliance must be positioned so that no combustibles are within, or can swing within (e.g. drapes, doors), 48” (121.9cm) of the front of the appliance.

2.2 minimum clearance to combustibles

⚠ WARNING

- Do not install into any area having less than 7 feet (2.1m) (ceiling to appliance bottom, excluding hearth height).

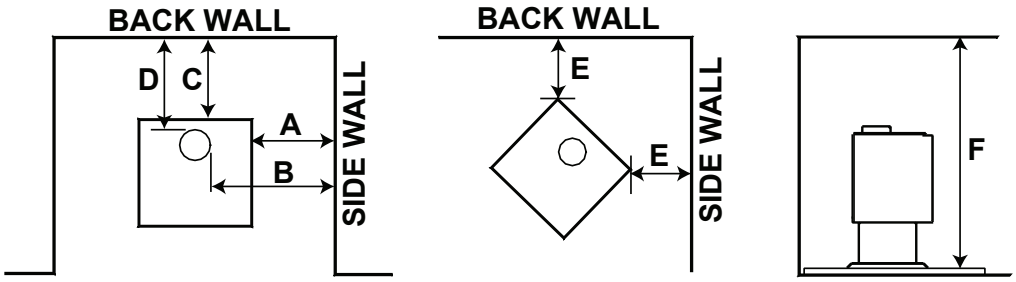

PARALLEL & CORNER	SINGLE WALL CONNECTOR	DOUBLE WALL CONNECTOR
Sidewall (A)	19" (48.3cm)	
Sidewall to flue (B)	28 7/8" (73.3cm)	
Backwall (C)	17 1/2" (44.5cm)	12 1/2" (31.8cm)
Backwall to flue (D)	21" (53.3cm)	16" (40.6cm)
Corner (E)	11" (279mm)	7" (178mm)
Ceiling (F)	84" (213.4cm)	75" (190.5cm)
Clearances can be reduced with shielding acceptable to local authorities. Reduced installation must comply with NFPA 211 or CAN/CSA-B365.		

installation planning

2.3 alcove installation

Your appliance may be installed, using a listed double wall connector, such as Security DL6 in Canada, the Simpson Duravent Plus DVL in the USA or an equivalent double wall connector, into an alcove having a depth of no more than 4 feet and a height of at least 6'3". The minimum clearances are as shown.

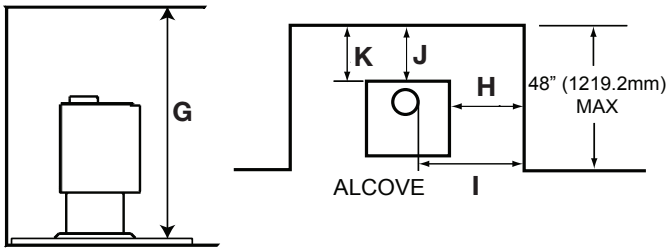

ALCOVE		
PARALLEL & CORNER	**SINGLE WALL CONNECTOR**	**DOUBLE WALL CONNECTOR**
Ceiling (G)	N/A	75" (190.5cm)
Side wall (H)	19" (48.3cm)	
Sidewall to flue (I)	28 7/8" (73.3cm)	
Backwall (J)	17 1/2" (44.5cm)	12 1/2" (31.8cm)
Backwall to flue (K)	21" (53.3cm)	16" (40.6cm)
NOTE: Minimum width is 64" (162.6cm) and minimum depth is 32" (81.3cm).		

2.4 floor protection

If the appliance is to be installed on top of a combustible floor, it must be placed on an approved non-combustible hearth pad, that extends 8" (203mm) beyond the appliance sides and back and 18" (45.7cm) to the front. The reduced clearance from the back of the appliance may result in the appliance pad terminating shorter than 8" (203mm) beyond the appliance.

note:

Floor protection is required for spark and ash shielding, but not for limiting floor temperatures from the radiant heat of the appliance. The appliance was designed and safety-tested so that without any protection, the floor would not overheat.

Refer to local building codes for suitable floor protection materials.

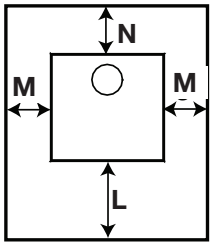

MINIMUM FLOOR PROTECTION			
	FRONT (L)	**SIDES (M)**	**BACK (N)**
CANADA	18" (45.7cm)	8" (203mm)	
USA	16" (406mm)	8" (203mm)	

note:

If a section of horizontal chimney connector is used, floor protection is required under the chimney connector and 2" (51mm) beyond each side.

2.5 outside air

The following are signs that fresh air may be required:

- When there is combustion present: Wood burns poorly, smoke spills, back-draft takes place and your chimney does not draw steadily.
- In the winter there is too much condensation on the windows.
- Opening a window seems to alleviate the above symptoms.
- A ventilation system is installed in the house.
- Other devices are present that exhaust house air.
- The house has tight fitting windows and/or is equipped with a well-sealed vapour barrier.

Systems such as HRV's are designed to bring fresh air into your home and will resolve these related performance issues with your appliance.

⚠ WARNING

- Wear gloves, protective footwear and safety glasses for protection.
- Carefully follow the instructions for assembly of the pipe and other parts needed to install the appliance. Failure to do so may result in a fire, especially if combustibles are too close to the appliance or chimney and air spacers are blocked, preventing the free movement of cooling air.
- Do not draw outside air from garage spaces. Exhaust products of gasoline engines are hazardous. Do not install outside air ducts such that the air may be drawn from attic spaces, basements or above the roofing where other heating appliances or fans and chimneys exhaust or utilize air. These precautions will reduce the possibility of appliance smoking or air flow reversal. The outside air inlet must remain clear of leaves, debris, ice and/or snow. It must be unrestricted while appliance is in use to prevent room air starvation which can cause smoke spillage and an inability to maintain a fire. Smoke spillage can also set off smoke alarms.
- Negative pressure within your home may inadvertently affect your appliance.
- To prevent contact with sagging or loose insulation, the appliance must not be installed against vapour barriers or exposed insulation. Localized overheating could occur and a fire could result.
- Do not use makeshift compromises during installation. Do not block or restrict air, grille or louvre openings. Do not add a hood.
- To prevent personal injury, keep hand tools in good condition, sharpen cutting edges and make sure tool handles are secure.
- Always maintain the minimum air space required in the enclosure to prevent fires.
- Check with local building officials for any permits required for installation of this appliance and notify your insurance company prior to proceeding.

3.1 chimney

⚠ WARNING

- Never install a single wall slip section or smoke pipe in a chase structure. The higher temperature of this single wall pipe may radiate sufficient heat to combustible chase materials to cause a fire.
- Do not connect this appliance to a chimney system serving another appliance.
- To avoid danger of fire, all instructions must be strictly followed, including the provision of air space clearance between chimney system and enclosure. To protect against the effects of corrosion on those parts exposed to the weather, we recommend that the chase top be painted with a rust-resistant paint.
- Do not fill any framed space around the chimney with insulation or any other material. Insulation placed in this area could cause adjacent combustibles to overheat.
- Maintain a minimum 2” (51mm) air clearance to all parts of the chimney system at all times (this excludes the chimney connection). Failure to maintain this 2” (51mm) air clearance will cause a structure fire. Never fill this space with any type of material.
- Detailed instructions for installation of the chase top, storm collar and termination cap are packaged with these parts.
- Do not cut rafters or ceiling joists without first consulting a building official to ensure structural integrity is not compromised.
- Firestop spacers must be used whenever the chimney penetrates a ceiling/floor area.
- The total horizontal vent length should not exceed 40% of the chimney height above the appliance all horizontal smoke pipe must slope slightly upwards a minimum of 1/4” (6.4mm) per foot and all connections must be tight and secured by three sheet metal screws equally spaced. An uninsulated smoke pipe shall not pass through an attic, roof space, closet or similar concealed space, or through a floor, ceiling, wall or partition, or any combustible constructions.
- Do not use any makeshift materials during installation.

Your appliance may be connected to a factory built or masonry chimney. If you are using a factory built chimney, it must comply with ULCS629 (Canada) or UL103 (USA) standards. It must therefore be a 6" (152mm) HT Type (2100°F) chimney. It is extremely important that it be installed according to the manufacturer’s specifications. The manufacturer’s installation instructions and specified clearances should always be followed in accordance with local and national codes. In Canada the CSA B365 and the CSA C22.1 installation codes are to be followed. In the USA the ANSI NFPA 70 and ANSI NFPA 211 installation codes are to be followed.

Chimney and chimney connector must be in good condition and kept clean.

installation

3.1.1 chimney connection

Your chimney connector and chimney must have the same diameter as the appliance's exhaust flue outlet. The appliance pipe must be made of aluminized or cold roll steel with a minimum 24 gauge (0.6mm) thickness. It is strictly forbidden to use galvanized steel.

A 6" (152.4mm) diameter single or double wall chimney connector, used to connect the appliance to the chimney, must be installed with the crimped end toward the appliance. This will ensure that the moisture which condenses from the burning wood will flow back into the fire chamber. Each joint in the chimney connector must be secured with at least three sheet metal screws, equally spaced around the circumference.

For installation of your chimney connector, the following recommendations may be useful.

- The chimney connector must be short and straight. For optimum performance, it is recommended that all horizontal runs have a minimum 1/4" (6.4mm) rise per foot (0.3m), with the higher end of the section toward the chimney. For safe and proper operation of the appliance, see "INSTALLATION" instructions.
- To ensure a good draft, the total horizontal length of the connector should never exceed 8' (2.4m) to 10' (3.1m). In the case of vertical installation, the total length of the connector can be longer and connected without problem to the chimney at the ceiling level.
- There should never be more than two 90° elbows in the entire connector and chimney system. Never start with a 90° elbow. Always go up vertically for at least 2 feet (0.6m) from the flue collar before using a 90° elbow.
- The connector must not pass through any combustible material, nor may it pass through a concealed space (such as an attic, roof space, or closet). If passing through a wall, ceiling or into a masonry chimney, use either chimney components listed for that specific use, or means acceptable to local authorities having jurisdiction over the installation.

This appliance must be connected to:

A. A chimney complying with the requirements for Type HT chimneys in the Standard for Chimneys, Factory-Built, Residential Type and Building Heating Appliance, or

B. A code-approved masonry chimney with a flue liner. Vent the stove into a masonry chimney or an approved, insulated solid-fuel stainless-steel chimney with as short and straight a length of 6" (152.4mm) diameter chimney connector as possible. Connection to a masonry thimble cemented in place.

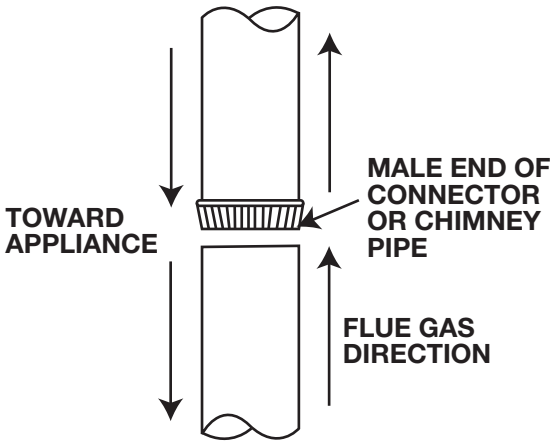

3.1.2 adding sections

Add chimney sections, according to the manufacturers installation instructions. If the chimney system passes through an attic space a rafter radiation shield or attic insulation shield is required. The chimney must extend at least 3ft (0.9m) above its point of contact with the roof and at least 2ft (0.6m) higher than any wall, roof or building within 10ft (3.1m). If the chimney extends more than 5ft (1.5m) above the roof, it must be secured using a roof brace or guide wires. A raincap must be installed to avoid internal damage and corrosion.

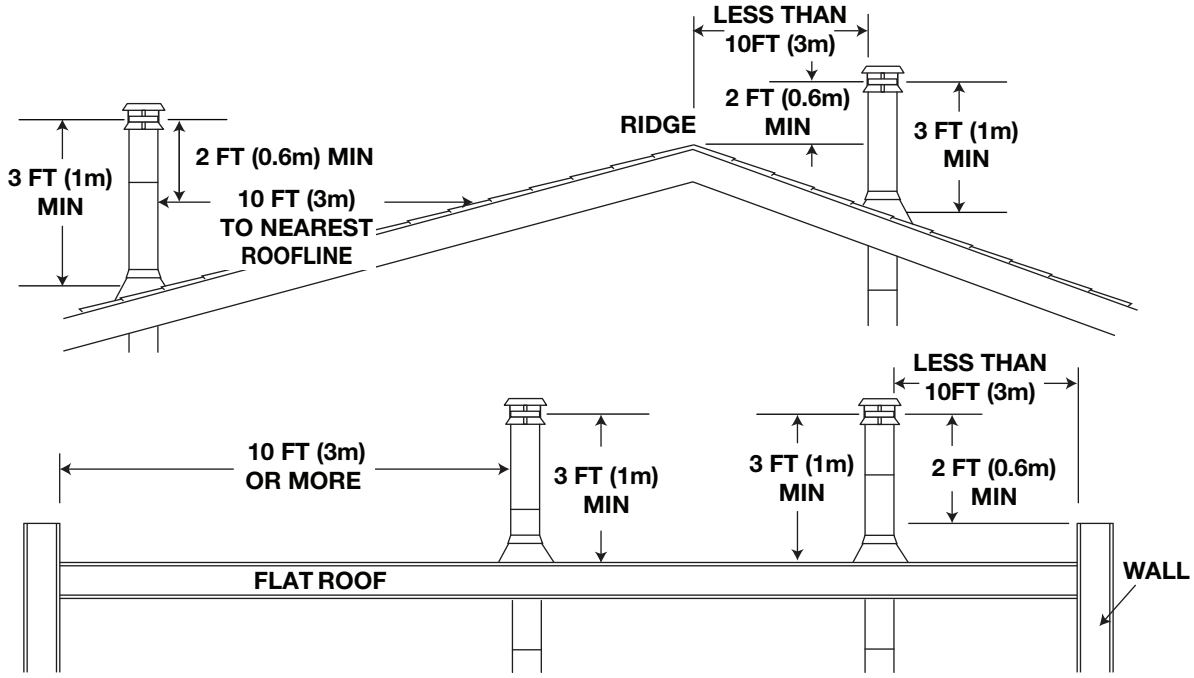

note:

This illustration is for wood appliances only.

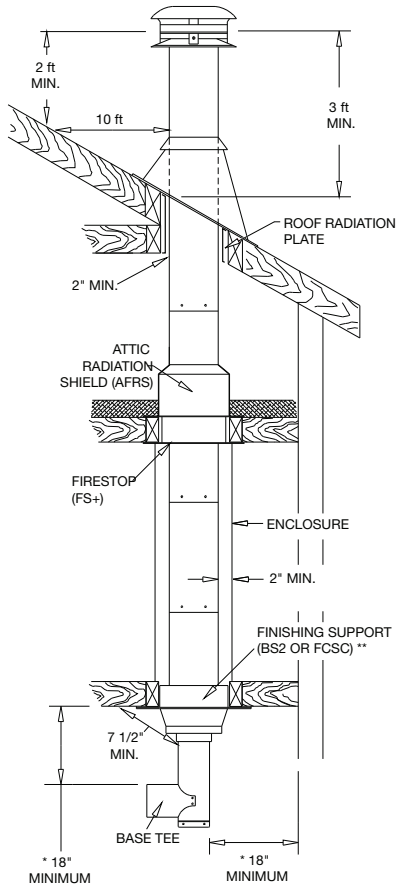

An insulated stainless steel chimney must be supported at the ceiling or roof and its installation must comply with its manufacturer's instructions.

* CLEARANCE CAN BE REDUCED IF A LISTED CHIMNEY CONNECTOR IS USED.
** CLEARANCES CAN BE LESS THAN 2" WHERE ESTABLISHED BY THE SUPPORT.

installation

3.1.3 typical through the ceiling

A. Move the stove into position with the flue centered, midpoint between two joists to prevent having to cut them. Use a plumb bob to line up the center.

B. Cut and frame an opening in the ceiling to provide a 2” (50.8mm) clearance between the outside of the chimney and any combustible material. **Do not fill this space with any type of material.** Nail headers between the joist for extra support. Firestop spacers must be placed on the bottom of each framed opening in any floor or ceiling that the chimney passes through. If your chimney system is enclosed within the attic area, a rafter radiation shield is required.

C. Hold a plumb bob from the underside of the roof to determine where the opening in the roof should be. Cut and frame the roof opening to maintain proper 2” (50.8mm) clearances.

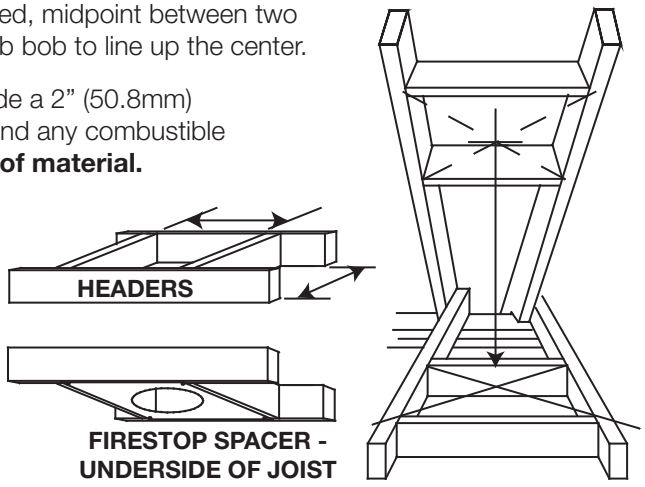

note:

The chimney must be supported at the ceiling or roof so that its weight does not rest on the appliance and must comply with its manufacturer’s instructions.

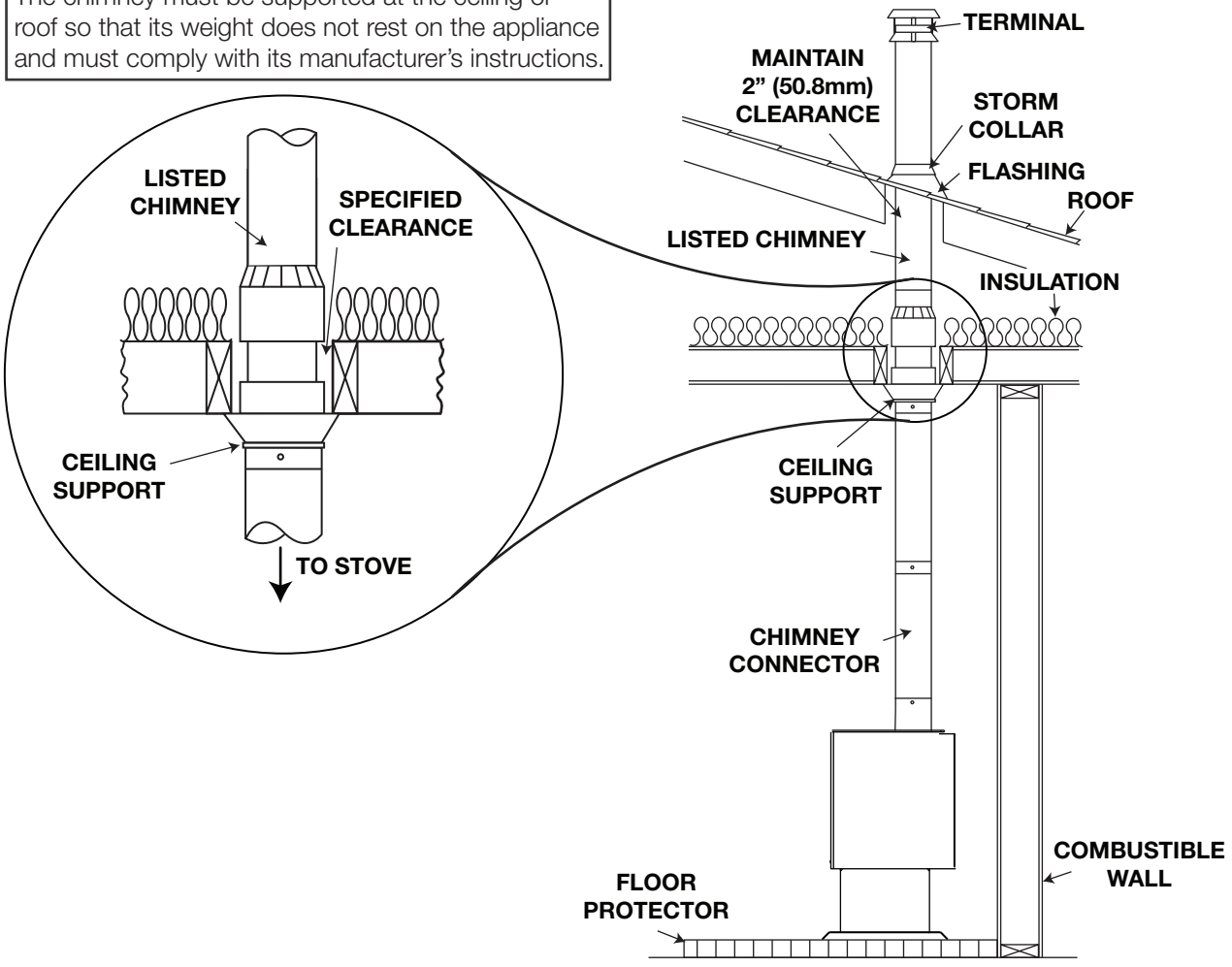

3.1.4 typical through the wall

If possible, design the installation so that the connector does not pass through a combustible wall. If during your installation you must pass through a combustible wall, check with your building inspector before you begin. Also check with the chimney connector manufacturer for any specific requirements.

Consult with your dealer regarding special connection components available for use for wall pass-throughs. Use only parts that have been tested and listed for use in a wall pass-through.

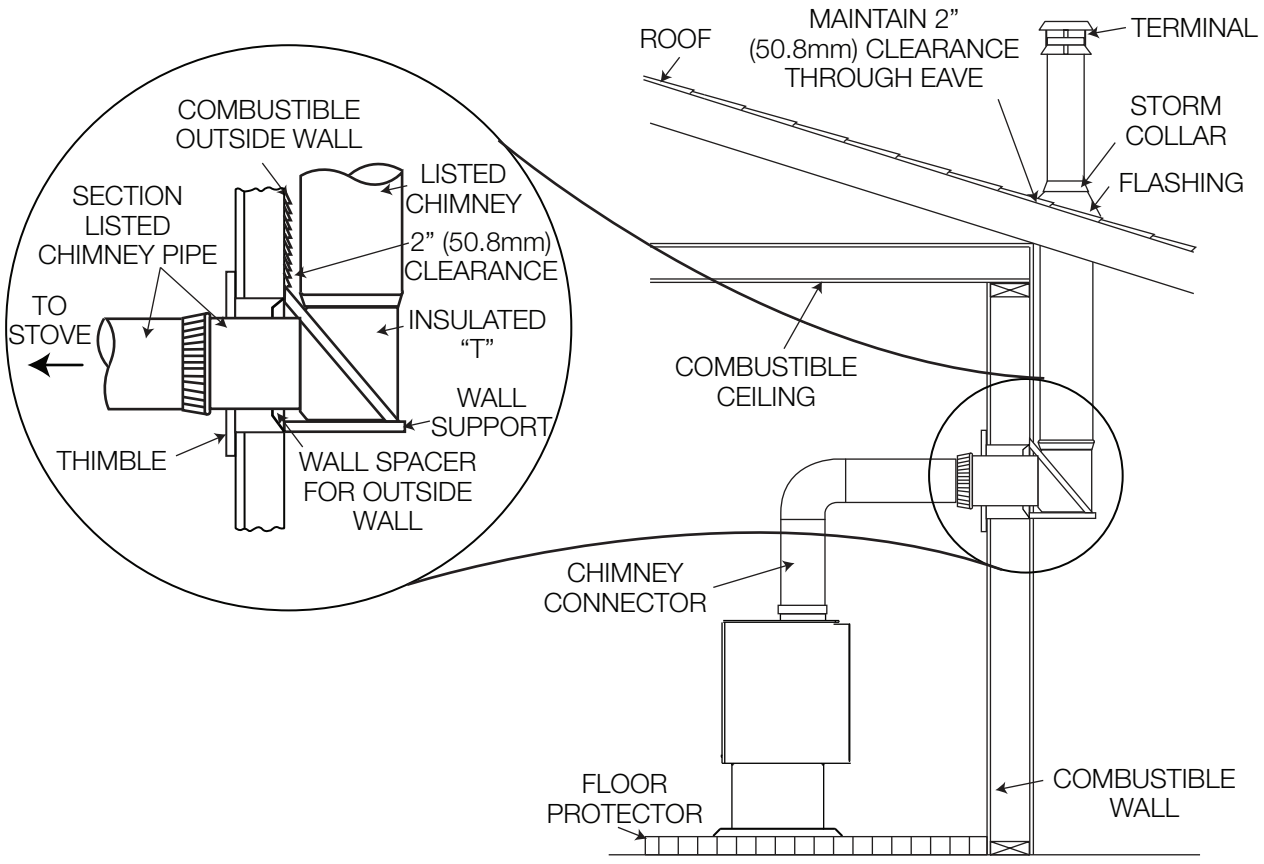

installation

3.1.5 typical existing masonry

You can also install your appliance using your existing masonry chimney. To do so, use the following guidelines. Use a factory-built thimble, or construct your own brick thimble. If you are using a masonry chimney, it is important that it be built in compliance with the specifications of the Building Code in your region. It must normally be lined with fire clay bricks, metal or clay tiles sealed together with fire cement. (Round flues are the most efficient). The maximum flue size is 8” (203.2mm) x 8” (203.2mm) square or 6” (152.4mm) round. For greater diameters it is necessary to install a 6” (152.4mm) stainless steel liner.

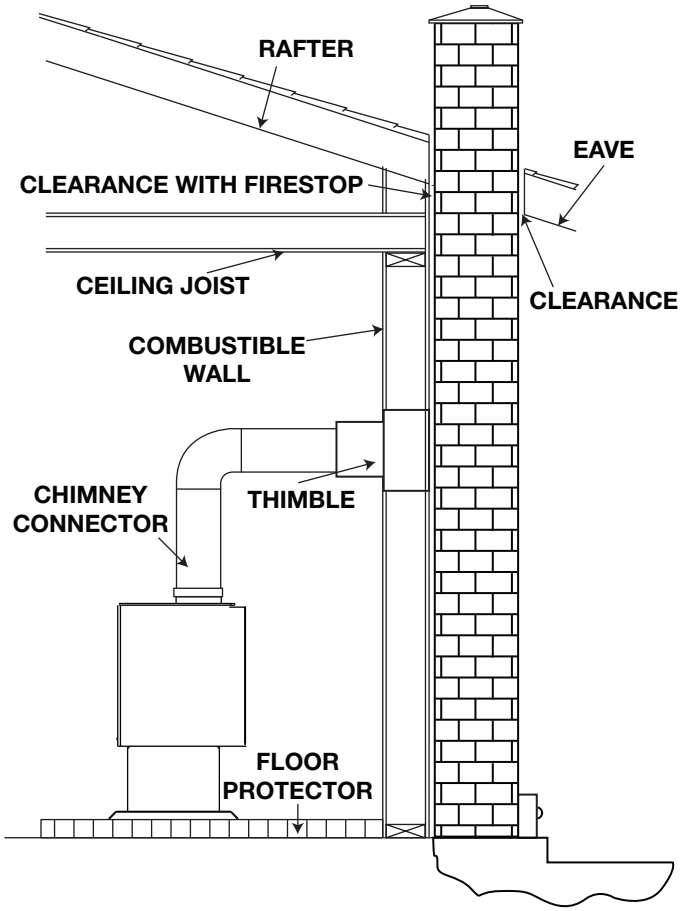

4.1 leg installation

⚠ WARNING

- Do **not** remove knockout unless installing the optional ash drawer kit.

To avoid being damaged during shipping, the appliance has been bolted to the pallet and must be unbolted before the appliance can be installed.

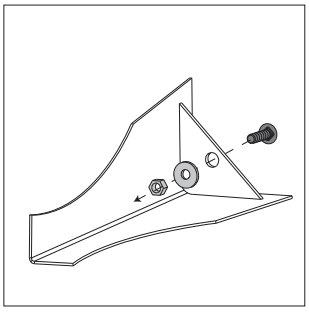

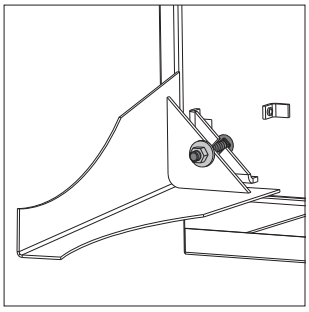

note:

If installing the optional ash drawer, see “optional ash drawer kit (EP20LAD)” section prior to heat shield and leg installation. Legs may need to be adjusted in order to properly align with the heat shield holes.

A. With the bolt through the legs, feed the washer and lock washer onto the bolt. Thread the nut a thread or two onto the bolt and slide the leg onto the slot on appliance as illustrated.

note:

Bolts must be tight prior to heat shield installation.

B. Slide the heat shield over the four bolts. Finally, secure the heat shield in place using the remaining nuts.

C. Lift the appliance up and gently set down on all four legs. Do not pivot appliance up on its legs, as this could result in damage to the legs.

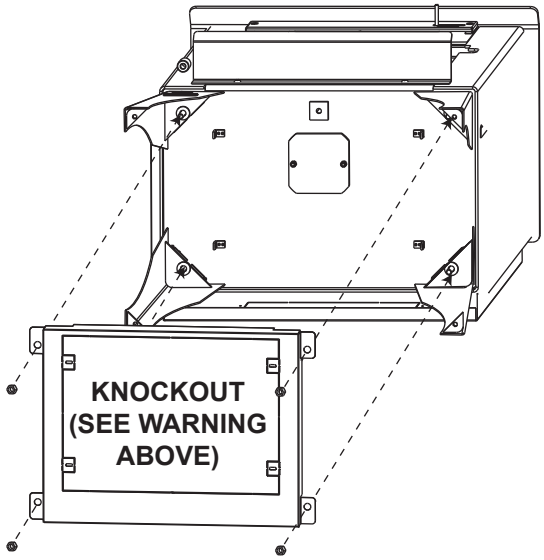

For additional logo placement locations, see “OPTIONAL ASH DRAWER” section.

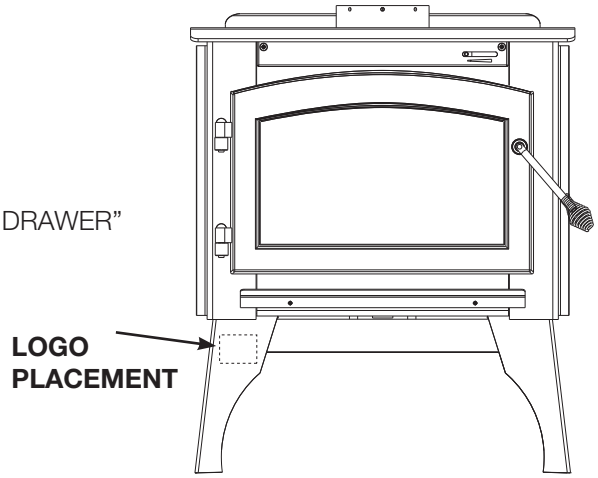

finishing

4.2 pedestal installation

note:

If an optional ash drawer kit is to be installed, ensure open side of pedestal is at the front of the appliance. If not, opening should be at the back.

To avoid being damaged during shipping, the appliance has been bolted to the pallet and must be unbolted before the appliance can be installed.

A. Using the machine screws supplied, secure the pedestal to the four brackets on the bottom of the firebox.

B. Lift the appliance up and gently set down on pedestal. Do not pivot appliance up as it could result in damage to the pedestal.

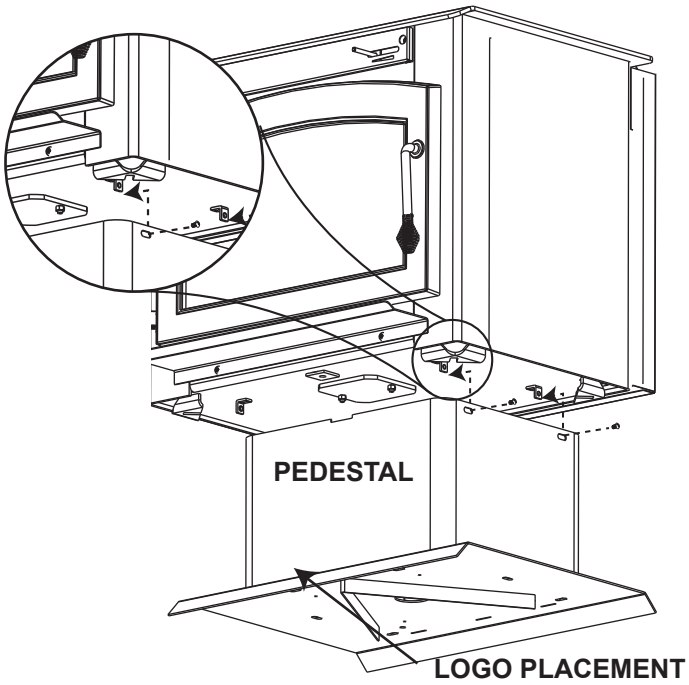

4.3 door removal

⚠ WARNING

- Burning your appliance in with the doors open or ajar creates a fire hazard that may result in a house and/or chimney fire.
- Do not strike or slam door.
- Never remove the door when the appliance is hot.

Pivot the door open and lift the door and pins off the bushings. Set the door aside being careful not to scratch the paint.

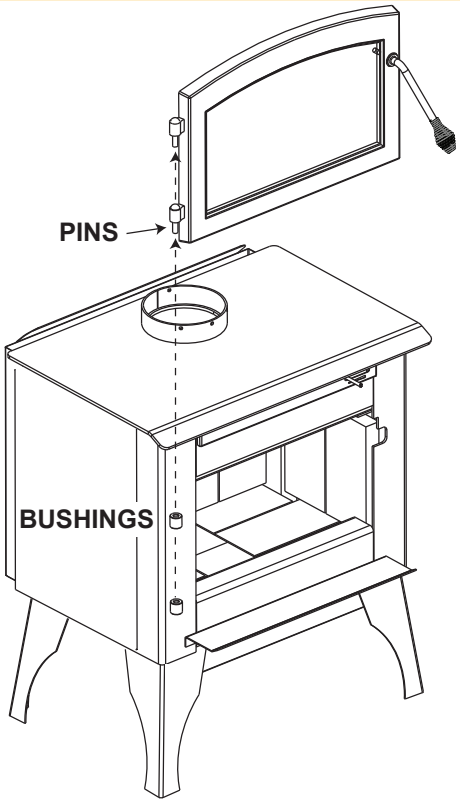

4.4 door handle installation

⚠ WARNING

- Burning your appliance in with the doors open or ajar creates a fire hazard that may result in a house and/or chimney fire.
- Do not strike or slam door.
- Never remove the door when the appliance is hot.

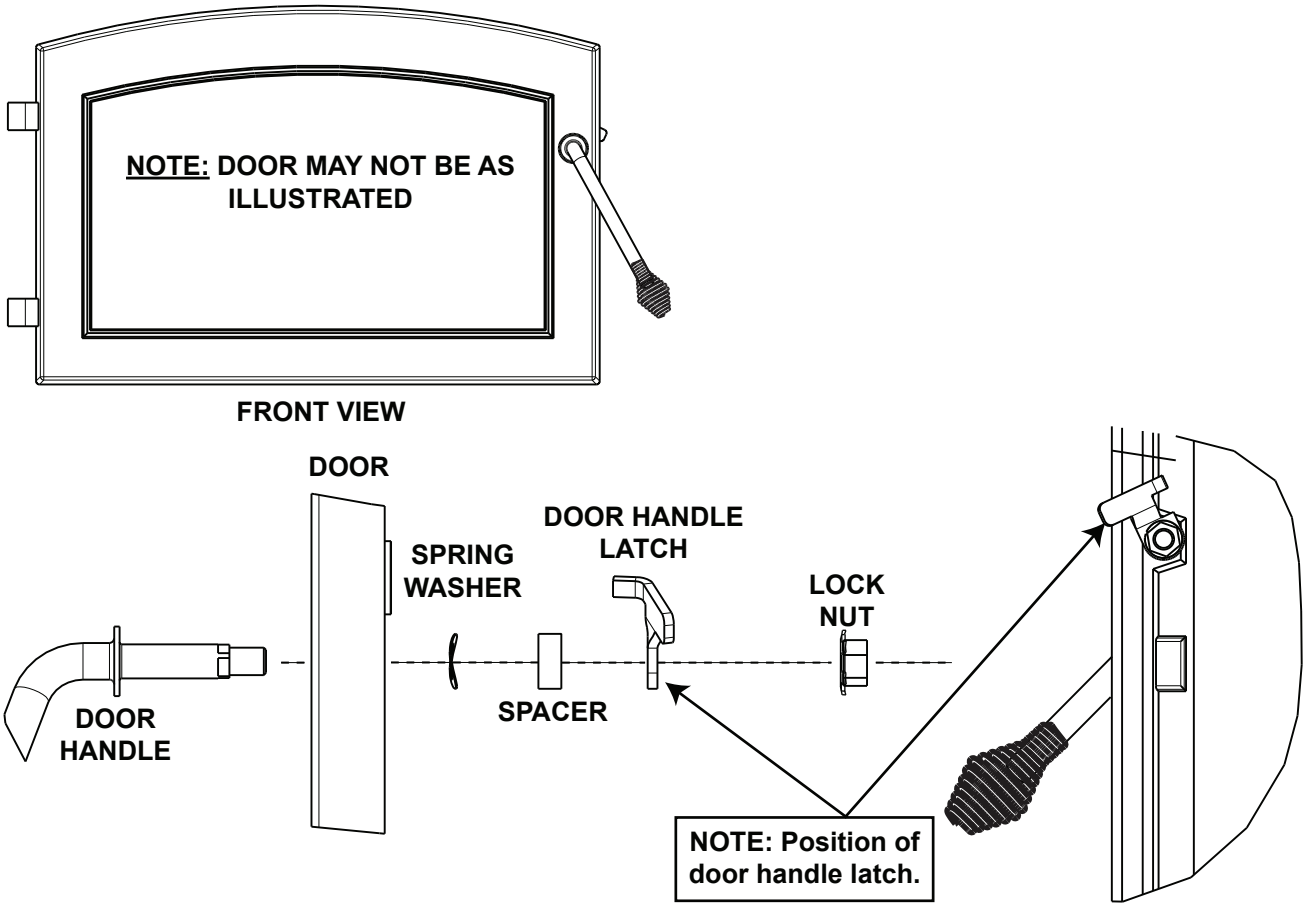

Twist the large wire handle over the end of the handle rod. Twist the smaller wire handle over the end of the air damper rod below the door.

finishing

4.5 secondary air tubes

1. Start at the back working forwards by sliding the secondary air tube in the firebox and inserting the tube into the hole, as illustrated in “1”.
2. Slide the tube into the opposite hole. With the holes on the secondary air tube pointing forward, align the tube with the tube retainer and insert the cotter pin, as illustrated in “2”.
3. Spread the cotter pin to retain.

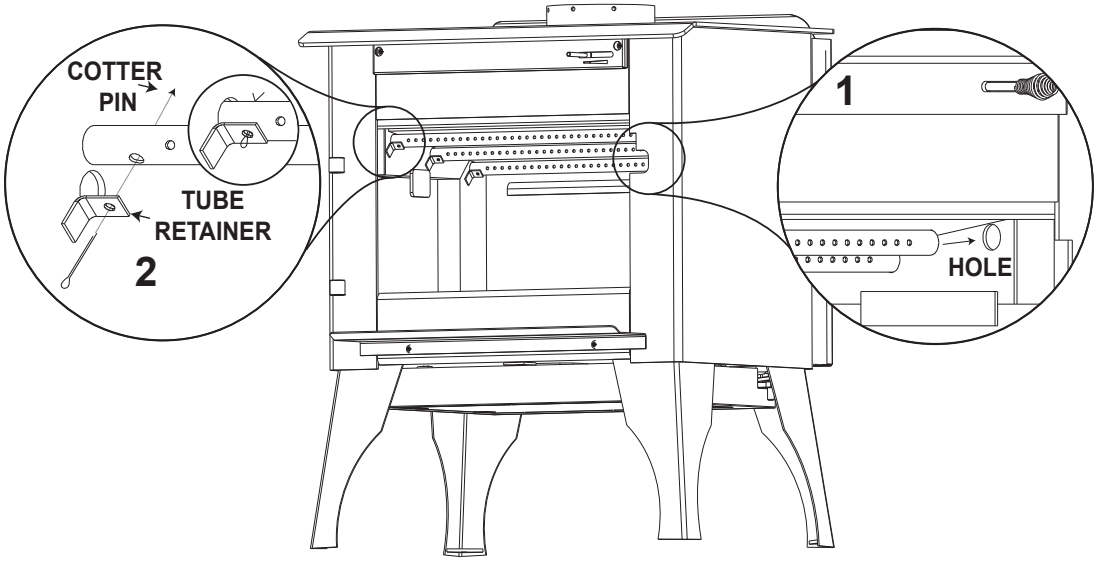

4.6 brick and baffle installation

⚠ WARNING

- Operation of the appliance without the baffles can result in excessive temperatures that could damage the appliance, chimney and the surrounding enclosure.

With the appliance and chimney installation completed, move the bricks into place as illustrated below.

A. Install the four (A) bricks, two (B) bricks and two (C) bricks, working from the back of the appliance forward as illustrated **(Fig. 1)**.

note:
Left and right rear bricks have been cut.

B. Install two (A) bricks along both sides of the appliance. Install the four (A) bricks and one (G) brick along the back wall by pivoting the bricks up under the brick retainer **(Fig. 1)**.

note:
Place narrow brick in center.

C. Carefully pivot fibre baffles (F) up onto the secondary air tubes **(Fig. 2)**. Ensure that the top baffles are pushed all the way to the rear of the firebox, leaving a minimum of a 1 inch gap along the front. This will allow the flue gases to escape the firebox. Ensure overlap joint is tight **(Fig. 2)**.

D. Install the two (D) bricks along the front **(Fig. 1)**.

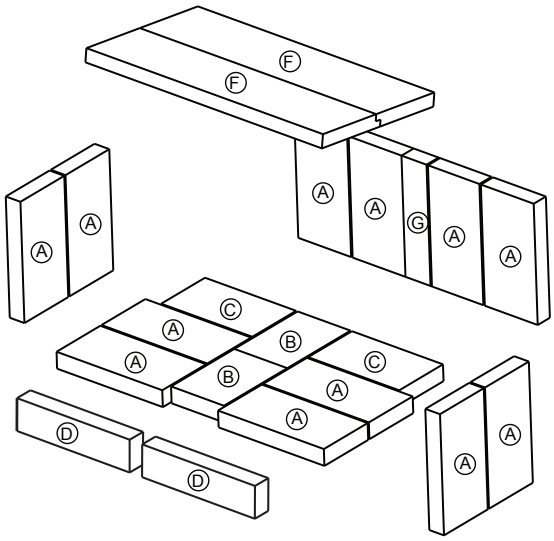

Fig. 1

note:
The fibre baffles are shipped in a box inside the firebox and must be removed from all special packaging prior to installation.

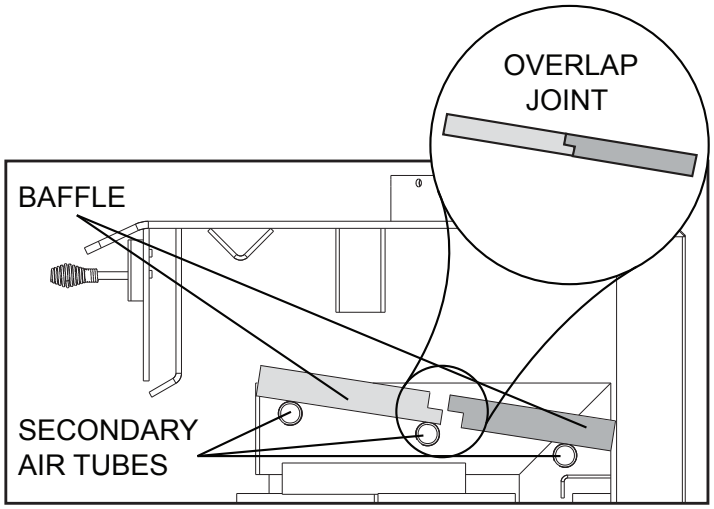

Fig. 2

4.7 ash lip installation

To avoid damage during transport, the ash lip has been shipped in the firebox. Using the two screws that secured the appliance to the shipping bracket, attach the ash lip as illustrated.

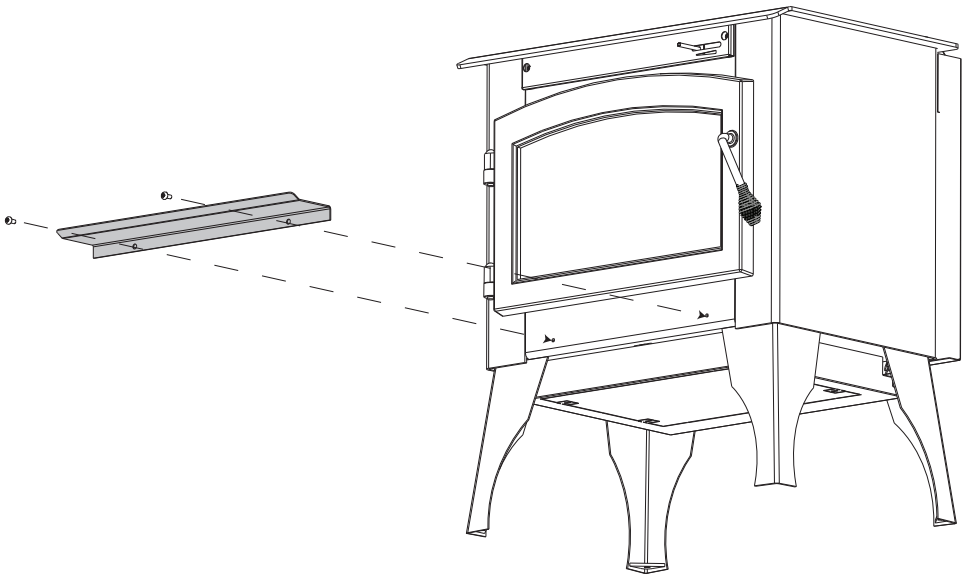

5.1 blower kit installation

⚠ WARNING

- Risk of fire and electrical shock!
- Turn off the gas and electrical power before servicing this appliance.
- Use only Wolf Steel approved optional accessories and replacement parts with this appliance. Using non-listed accessories (blowers, doors, louvres, trims, gas components, venting components, etc.) could result in a safety hazard and will void the warranty and certification.
- Ensure that the fan's power cord is not in contact with any surface of the appliance to prevent electrical shock or fire damage. Do not run the power cord beneath the appliance.
- The wire harness provided in the blower kit is a universal harness. When installed, ensure that any excess wire is contained, prevent it from making contact with moving or hot objects.

Drywall dust will penetrate into the blower bearings, causing irreparable damage. Care must be taken to prevent drywall dust from coming into contact with the blower or its compartment. Any damage resulting from this condition is not covered by the warranty policy. Use of the blower increases the output of heat.

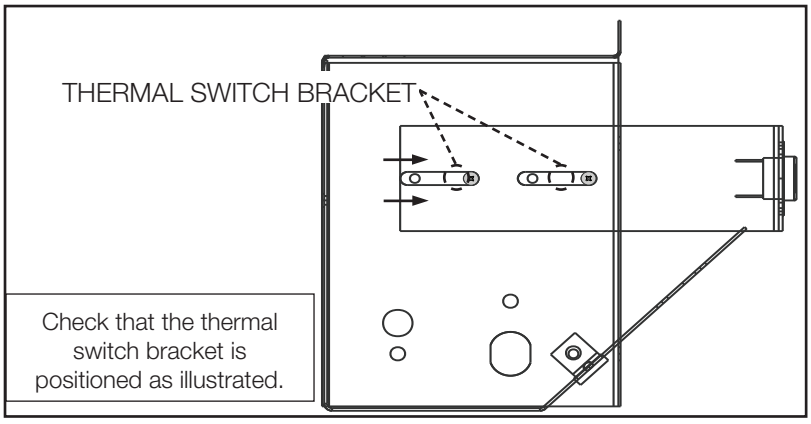

Provisions have been made on this appliance to install an optional blower kit (EPT70) that comes complete with a variable speed switch to turn the blower ON/OFF, as well as adjusting the blower speed.

A. Ensure the thermal disc bracket is in the correct position.

B. Remove the knock-out from the back of the appliance.

C. Install the blower and housing as shown using the 4 screws supplied.

D. Loosen the thermal disc bracket (2 screws) and slide the bracket until the thermal disc is touching the rear of the firebox and secure.

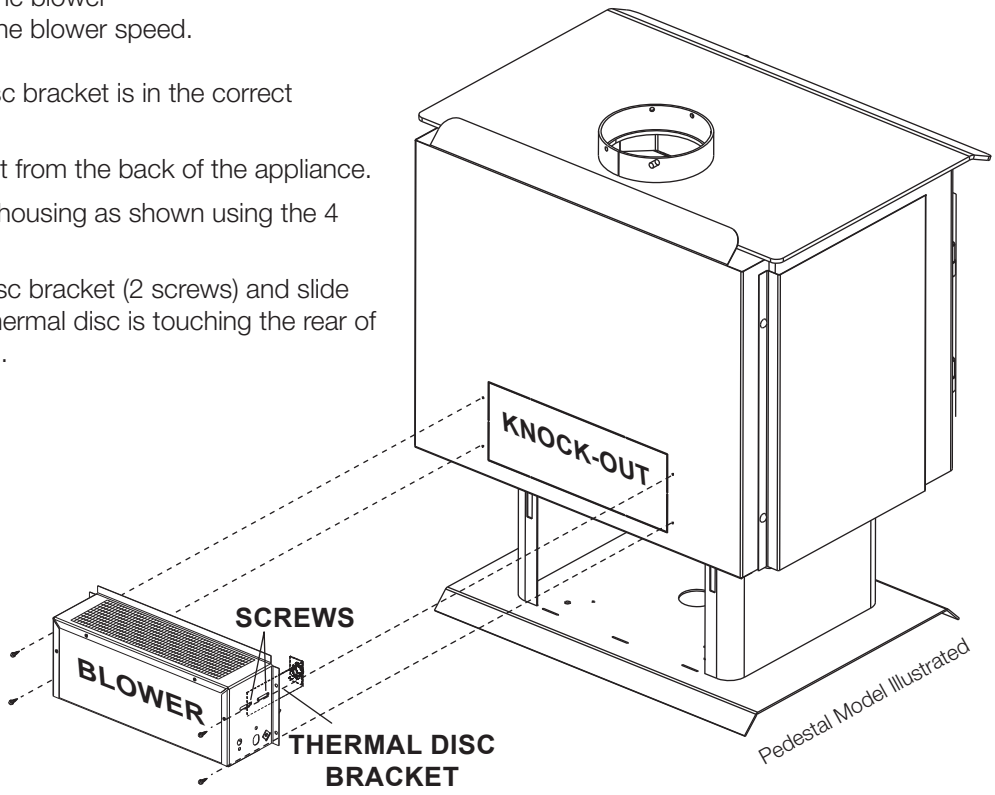

optional installation

5.2 ash drawer kit (EP20LAD)

⚠ WARNING

- Failure to achieve a good seal between the ash opening and ash plug will result in an over-fire condition that could cause damage to the appliance.

Provisions have been made on the appliance to install an optional ash drawer kit. The kit allows for convenient removal of excess ash.

1. If the appliance has been previously operated, the appliance must be cold and the ashes must be removed in order to access the ash plug.

note:

Place the ash drawer from the kit underneath the appliance to catch falling ashes during the installation.

2. From the underside of the appliance, remove the nuts that secures the heat shield and the ash opening cover plate.
3. Remove the small light weight brick that is covering the ash opening, and discard. It is important that the area around the ash opening be cleaned well to ensure that a proper seal is created between the new ash plug and the ash opening.
4. Once the area surrounding the opening has been cleaned, place the new ash plug (supplied) over the opening.
5. Carefully remove the knock out from the heat shield by breaking the micro tabs.
6. Bend out the four bend tabs at a 90 ° angle from the heat shield.
7. Align the slots in the ash drawer housing with the four bend tabs. Secure using the four screws supplied.
8. Secure the heat shield and ash drawer housing to the appliance using the nuts removed in step 2.
9. Slide the ash drawer into the ash housing.

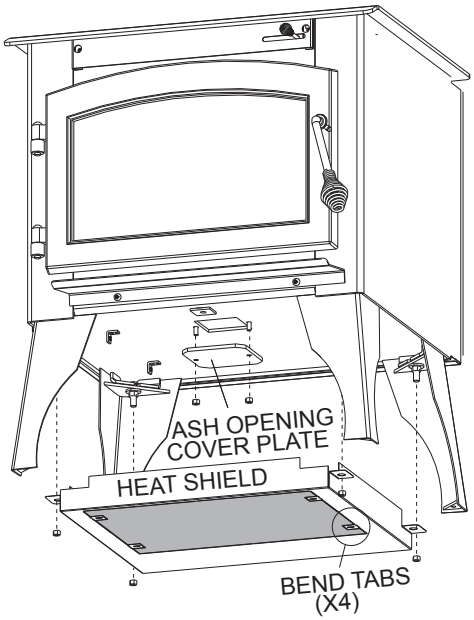

5.3 ash pan kit (EP20PAD)

⚠ WARNING

- Failure to achieve a good seal between the ash opening and ash plug will result in an over-fire condition that could cause damage to the appliance.

Provisions have been made on the appliance to install an optional ash drawer kit. The kit allows for convenient removal of excess ash.

note:

It is recommended to install the rails on the pedestal base prior to installing the pedestal assembly to the firebox.

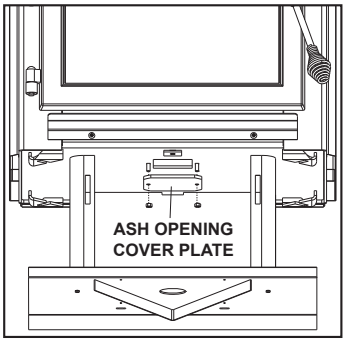

1. If the appliance has been previously operated, it must be cold and the ashes must be removed in order to access the ash plug.
2. If the pedestal has been installed with the opening to the back, it will be necessary to lay the appliance onto its back, remove the pedestal and re-install it with the opening to the front. It is recommended all fire brick, including baffles, be removed prior to placing the appliance on its back.
3. From the underside of the appliance, remove the nuts that secure the ash opening cover plate.
4. Install the ash pan rails using the screws provided.
5. Snap the magnets into place.
6. Slide the ash drawer into the ash housing.
7. Install the handle using the screws provided and affix the logo to the ash pan housing cover as illustrated.
8. Place the ash pan housing cover in front of the opening, engaging it into the slots.
9. Remove the small light weight brick that was covering the ash opening and discard. It is important that the area around the ash opening be cleaned well to ensure that a proper seal is created between the new ash plug and the ash opening.
10. Once the area surrounding the opening has been cleaned, place the new ash plug (supplied) over the opening, allowing the protrusion on the brick to recess into the opening on the bottom of the firebox.

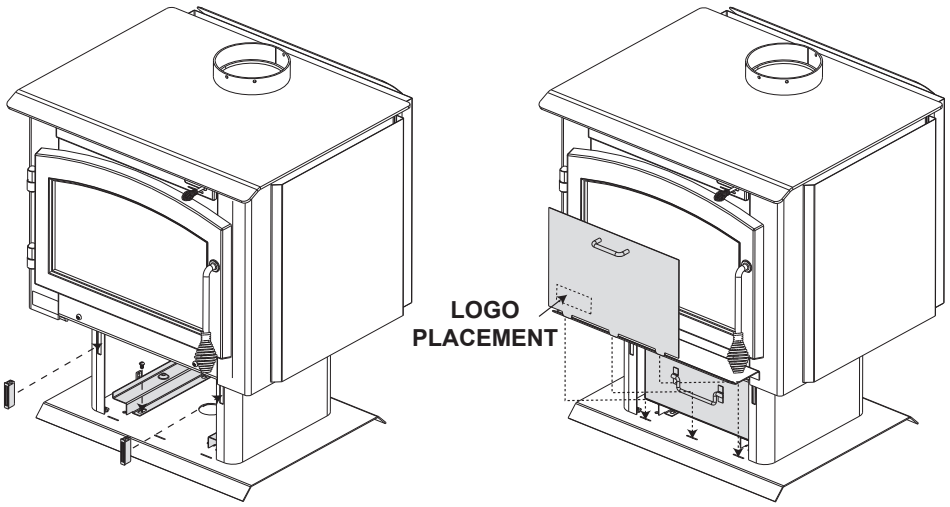

6.0 operation

⚠ WARNING

- Always operate this appliance with the door closed and latched except during startup and re-fueling. Always wear gloves to prevent injury. Do not leave the fire unattended when the door is unlatched as unstable wood could fall out of the fire chamber creating a fire hazard to your home.
- Never leave your children unattended when there is a fire burning in the appliance.
- Never use gasoline, gasoline-type lantern fuel, kerosene, charcoal lighter fluid, or similar liquids to start or 'freshen up' a fire in this appliance. Keep all such liquids well away from the appliance while it is in use.
- Objects placed in front of the appliance should be kept a minimum of 48" (121.9cm) from the front face.
- Any modification of the appliance that has not been approved in writing by the testing authority is considered breaching CSA B365 (Canada) and ANSI/NFPA 211 (USA).
- Open air control (and damper when fitted) before opening firing door.
- Hot while in operation. Keep children, clothing and furniture away. Contact may cause skin burns. Wear gloves to operate your appliance.
- Burning your appliance with the doors open or ajar creates a fire hazard that may result in a house and/or chimney fire.
- This wood appliance has a manufacturer-set minimum low burn rate that must not be altered. It is against federal regulations in the United States to alter this setting or otherwise operate this wood appliance in a manner inconsistent with operating instructions in this manual.

Your Timberwolf EPA listed product is a Hi-tech appliance, designed with the most advanced technology. The appliance is extremely airtight.

The first fire(s) in your appliance will be difficult to get going and keep going with little amount of heat being generated. This is a result of the moisture being driven out of the fire brick. During the break-in period (the first 2 or 3 fires) create only small, fires using kindling; this will allow the firebrick to cure. Do not be alarmed if small hairline cracks develop in the firebrick. This is a normal occurrence and does not pose a safety hazard. The paint may also smell a little for the first few fires as it cures and you may wish to open a door or window to alleviate the smell.

To start, a brisk fire is required. Place loosely crumpled paper on the floor of the appliance and cover with dry kindling. Open the air control fully by sliding control all the way to the right. Light the paper and leave the door slightly ajar (1"/25.4mm) until all kindling is burning. To maintain a brisk fire, a hot coal bed must be established and sustained.

Slowly add larger wood (2x4 size pieces). Lay the pieces lengthwise from side to side in the hot coal bed with a shallow trench between, so that the primary air can flow directly into this trench and ignite the fuel above. When the fire seems to be at its peak, medium sized logs may be added. Once these logs have caught fire, carefully close the door. (Closing the door too quickly after refueling will reduce the firebox temperature and result in an unsatisfactory burn.) Remember it is more efficient to burn medium sized wood, briskly, and refuel frequently than to load the appliance with large logs that result in a smouldering, inefficient fire and dirty glass.

As soon as the door is closed, you will observe a change in the flame pattern. The flames will get smaller and lazier because less oxygen is getting into the combustion chamber. The flames, however, are more efficient. The flames will remain lazy but become larger again as soon as the firebricks have been heated thoroughly and the chimney becomes heated and provides a good draft. At this point, the roaring fire that you see when the door is opened is wastefully drawing heated room air up the chimney, certainly not desirable. Always operate with the door fully closed once the medium sized logs have caught fire.

You can now add larger pieces of wood and operate the appliance normally. Once the appliance is entirely hot, it will burn very efficiently with little smoke from the chimney. There will be a bed of orange coals in the firebox and secondary flames flickering just below the top baffles. You can safely fill the firebox with wood to the top of the door and will get best burns if you keep the appliance pipe temperatures between 250°F (120°C) and 450°F (270°C). A surface thermometer will help regulate this.

Without an appliance thermometer, you are working blindly and have no idea of how the appliance is operating! An appliance thermometer offers a guide to performance and should be located 18" (457mm) above the flue collar. Install the thermometer according to manufacturers instructions.

Can't get the fire going?
Use more kindling and paper. Assuming the chimney and vent are sized correctly and there is sufficient combustion air, the lack of sufficiently dry quantities of small kindling is the problem. Thumb size is a good gauge for small kindling diameter.

Can't get heat out of the appliance?
One of two things may have happened. The appliance door may have been closed prematurely and the appliance itself has not reached optimum temperature. Re-open the door and/or draft control to re-establish a brisk fire. The other problem may have been wet wood. The typical symptom is sizzling wood and moisture being driven from the wood.

6.1 optimum burn method

For optimal emissions performance and efficiency follow these simple guidelines when using your appliance:

A. Maintain a 2" (51mm) deep, hot, glowing red coal bed.

B. Burn dry seasoned wood with less than 20% moisture content and burn so that the glass door remains clean.

C. A stove thermometer 18" (457mm) up on the single wall stove pipe should indicate 350°F (176°C) as an average temperature.

D. Maintain a minimal trace of smoke coming from the chimney when the appliance is burning as intended.

E. Inspect and replace all necessary components such as gaskets, manifolds, glass and other components which may affect the overall appliance performance.

F. Ensure an adequate draft to control burn rate and temperature.

Refer to "OPERATION" and "MAINTENANCE" sections for detailed information.

6.2 air control

⚠ WARNING

- This wood appliance has a manufacturer-set minimum low burn rate that must not be altered. It is against federal regulations in the United States to alter the setting or otherwise operate this wood appliance in a manner inconsistent with operating instructions in this manual.

Draft is the force which moves air from the firebox up through the chimney. The amount of draft in your chimney depends on the length and diameter of chimney, local geography, nearby obstructions and other factors including the amount of heat generated by the fire which can be measured by an appliance thermometer.

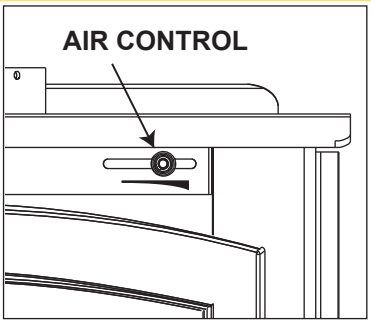

Adjusting the air control all the way to the left reduces the temperature. The draft can be adjusted from low to high by moving the handle from left to right.

Inadequate draft may cause back-puffing into the room through the appliance and chimney connector points and may cause plugging of the chimney. Too much draft may cause an excessive temperature in the appliance, glowing red appliance parts or chimney connectors or an uncontrollable burn which can lead to a chimney fire or permanent damage to the appliance.

Do not operate your appliance for longer than 30 minutes with the draft control on "HIGH" (fully open).

6.3 fire extinguishers / smoke & carbon monoxide detectors

note:

Always check your smoke and CO detectors are working properly.

All homes with a solid fuel burning appliance should have at least one fire extinguisher in a central location, known to all, at least one smoke detector and carbon monoxide (CO) detector in the room containing the appliance. If the smoke detector sounds an alarm, correct the cause but do not deactive or relocate the smoke detector. If the carbon monoxide detector sounds an alarm, immediately vent the area, evacuate and call your local fire department.

6.4 fuel

⚠ WARNING

- Do not store fuel within the clearance to combustibles, or in the space required for re-fueling and ash removal.
- Burning wet, unseasoned wood can cause excessive creasote accumulation. When ignited, it can cause a chimney fire that may result in a serious house fire.

When loading the appliance, ensure that the two upper fibre baffles are not lifted up and off their ledge. For maximum efficiency, when the appliance is thoroughly hot, load it fully to the top of the door opening and burn at a medium low setting. Maximum heat for minimum fuel (optimum burn) occurs when the appliance top temperature is between 500°F (260°C) and 600°F (315°C). The bricks will be nearly all white and the glass mostly clear. The whiteness of the bricks and the cleanliness of the glass are good indicators of your operating efficiency. Not enough heat is produced when only one or two pieces of wood are burned or the wood may not burn completely. A minimum of three pieces are needed to encase a bed of coals that sustains the fire.

note:

When loading the appliance, ensure to keep fuel back from the glass. If coals are to accumulate on the front lip, there is a chance they will fall out when the door is opened.

Loosely stacked wood burns quicker than a tightly packed load. Wood burns in cycles rather than giving a steady output of heat. It is best to plan these cycles around your household routine so that only enough coals are left to start the next load. In the evening, load your appliance, at least, a half-hour before bed to ensure a good fire, hot enough to close the draft control for an overnight burn.

Burn only dry seasoned wood with less than 20% moisture content. It produces more heat and less soot or creosote. Do not burn ocean beach wood. Its salt content can produce a metal-eating acid. When refueling open the door slowly to prevent smoke spillage. Use a pair of long gloves (barbecue gloves) when feeding the fire. Because these appliances burn at the front, they are clean and efficient, but they are also very hot and gloves are useful. Keep a small steel shovel nearby to use as a poker and to remove ashes. Do not store the wood within 3 feet (1m) of the appliance.

6.5 lighting a fire

6.5.1 flash fire

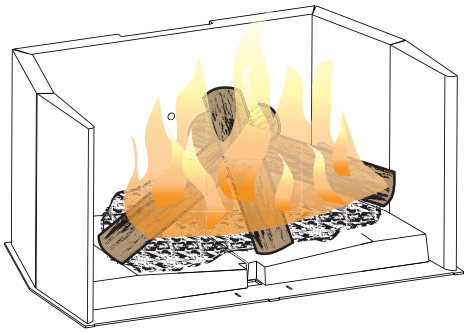

A flash fire is a small fire burned quickly when you don't need much heat. After your kindling has "caught", load at least 3 pieces of wood, stacked loosely. Burn with the draft control fully open or closed only slightly.

6.5.2 extended fire

Load your larger pieces of wood so they are tightly packed, close enough to prevent the flames from penetrating it completely. After approximately 30 minutes, depending on the size of the load, close the draft control completely making sure that the fire is not extinguished.

DO NOT OVERFIRE THE APPLIANCE!

Overfiring can occur by:

A. Burning large amounts of smaller wood pieces such as furniture scraps, skids or treated wood;

B. Vigorously burning large loads of wood with the draft control on “HIGH” (fully open) for long periods of time (one or two hours).

C. Operating the appliance with the ash dump door blocked open or a poor gasket seal on the main door.

6.6 smoking

A properly installed appliance should not smoke. If yours does, check the following:

- Has the chimney had time to get hot?
- Is the smoke passage blocked anywhere in the appliance, chimney connector or chimney?
- Is the room too airtight and the air intake not connected to the outside? Try with a window partly open.
- Is the smoke flow impeded by too long a horizontal pipe or too many bends?
- Is it a weak draft perhaps caused by a leaky chimney, a cold outside chimney, too large a diameter of a chimney, too short a chimney, or a chimney too close to trees or a higher roof?
- Is the moisture content of the wood greater than 20%?
- If equipped, has the catalyst bypass been closed or closed prematurely?

6.7 optional fan operation

The following operating procedure is recommended to achieve optimal performance:

When operating on high burn rate:

1. Set the fan to the “HIGH” setting and operate with a thermodisc (located at the back of the appliance).

When operating on medium burn rate:

2. Do not use the fan.

When operating on low burn rate:

3. The fan can be turned on after 60 minutes at the minimum setting. Operate with a thermodisc (located at the back of the appliance).

7.0 maintenance

⚠ WARNING

- Turn off the power before servicing the appliance.
- Appliance may be hot, do not service until appliance has cooled.
- Do not use abrasive cleaners.

Check your chimney and chimney connector for creosote and soot buildup weekly until a safe frequency for cleaning is established.
If accumulation is excessive, disconnect the appliance and clean both the chimney and the appliance. You may want to call a professional chimney sweep to clean them. Both have to be cleaned at least once a year or as often as necessary.

Remove fibre baffles and clean above them once a year.
Replace any broken bricks.

7.1 ash removal procedures

⚠ WARNING

- Improper disposal of ashes result in fires. Do not discard ashes in cardboard boxes, dump in backyards, or store in garages.
- If using a vacuum to clean up ashes, be sure the ashes are entirely cooled. Using a vacuum to clean up warm ashes could cause a fire inside the vacuum.
- Never operate your appliance with the grate cover removed.
- Failure to achieve a good seal between the ash opening, ash plug or ash well door will result in an over-fire condition that could cause damage to the appliance.

Allow the ashes in your firebox to accumulate to a depth of two or three inches; they tend to burn themselves up. When the fire has burned down and cooled, remove any excess ashes but leave an ash bed approximately 1 inch (25mm) deep on the firebox bottom to help maintain a hot charcoal bed.

DISPOSAL OF ASHES: Ashes should be placed in a metal container with a tight fitting lid. The closed container of ashes should be placed on a non-combustible floor or ground, well away from all combustible materials, pending final disposal. If the ashes are disposed of by burial in soil or otherwise locally dispersed, they should be retained in the closed container until all cinders have thoroughly cooled.

7.1.1 ash removal with ash drawer

1. To remove the ashes, clear the ash away from the ash plug.
2. Remove the ash plug. **It is recommended to use a poker.**
3. Rake the excess ash into the ash drawer.
4. **Do not overfill the ash drawer. Ash should not accumulate higher than the sides of the drawer.**
5. Before removing the drawer, ensure that the area around the ash opening is clean. Tap the ash from the chute into the drawer, then place the ash plug back over opening. Only operate your appliance with a well sealed ash plug.

7.2 creosote formation and removal

When wood is burned slowly, it produces tar and other organic vapors, which combine with expelled moisture to form creosote. The creosote vapors condense in the relatively cooler chimney flue or a slow-burning fire. As a result, creosote residue accumulates on the flue lining. When ignited, this creosote makes an extremely hot fire.

The chimney connector and chimney should be inspected at least once every two months during the heating season to determine if a creosote buildup has occurred.

If creosote has accumulated, it should be removed to reduce the risk of a chimney fire.

7.3 runaway or chimney fire

⚠ WARNING

- A chimney fire can permanently damage your chimney system. This damage can only be repaired by replacing the damaged component parts. Chimney fires are not covered by the lifetime limited warranty.

CAUSES:

- Using incorrect fuel, or small fuel pieces which would normally be used as kindling.
- Creosote build up in chimney.
- Leaving the door ajar too long and creating extreme temperatures as the air rushes in the open door.
- If equipped, burning your appliance with the ash plug not securely seated.

SOLUTIONS:

- Do not burn treated, painted, artificial, paper or processed wood logs, coal, charcoal, coloured paper or cardboard.
- Have chimney regularly cleaned.
- Be careful not to over-fire the appliance by leaving the door open too long after initial start-up. A thermometer on the chimney connector and/or appliance top helps to indicate the appliance operating temperature.
- If equipped, always operate the appliance with the ash plug properly installed.

IN CASE OF A CHIMNEY FIRE:

- Close glass door and air control (and damper, when equipped).
- Have a well understood plan for evacuation and a place outside for everyone to meet. Prepare to evacuate to ensure everyone's safety.
- Call local fire department. Have a fire extinguisher handy. Contact local authorities for further information on how to handle a chimney fire.
- After the chimney fire is out, clean and inspect the chimney or chimney liner for stress and cracks prior to lighting another fire. Also check combustibles around the chimney and the roof.

7.4 chimney cleaning

Both the chimney and the appliance must be inspected and cleaned if necessary at least once a year.
For serious wood burners, chimney cleaning must be done as needed to avoid chimney fires; the venting systems for controlled combustion appliances may need cleaning as often as once a month. These rates, however, depend on the burning habits of the individual operating the appliance. For example, it is possible to clog a solid fuel appliance chimney in a few days if slow, smoldering fires are burned and the chimney is cold.

note:
Appliances burned consistently without hot fires may result in significant creosote accumulations in the chimney.

Certain items and considerations are important in chimney cleaning:

- Proper tools should be used, including a brush specifically designed for chimney cleaning.
- The chimney connector and dampers as well as the chimney should be cleaned.
- The appliance's firebox and baffle system should be cleaned if needed.
- The chimney should be inspected and repairs made if needed, preferably by a qualified chimney sweep or mason.

7.5 door glass replacement

⚠ WARNING

- Do not use substitute materials.
- Glass may be hot. Do not touch glass until cooled.
- Care must be taken when removing and disposing of any broken door glass or damaged components. Be sure to vacuum up any broken glass from inside appliance before operation.
- Do not strike, slam, or scratch. Do not operate appliance with glass removed, cracked, broken, or scratched.

Replacement glass/frame assembly shall be replaced as a complete unit as supplied by the appliance manufacturer.

note:

Care must be taken when removing and disposing of any broken glass or damaged components. Be sure to vacuum up any broken glass from inside the appliance before operation.

7.6 gasket replacement

At the end of each burning season inspect the shield and gasket below the manifold for warping or deterioration. Replace if necessary. Both are held to the manifold with machine screws. The shield and the 1/8" (3.2mm) fibre cloth gasket are available from your Wolf Steel Ltd. dealer. At this time also check that the door gasket is not worn or loose. Replace with 3/8" (9.5mm) high density fibreglass rope if necessary.

The airwash gasket and shield above the door should also be inspected and replaced if deteriorated

note:

Do not operate the appliance if the manifold shield or fibre baffle is deteriorated or missing.

7.7 care of glass

⚠ WARNING

- Do not clean glass when hot! Do not use abrasive cleaners to clean glass.

If the glass is not kept clean, permanent discolouration and/or blemishes may result. Normally a hot fire will clean the glass. The most common reasons for dirty glass include:

- Not using sufficient fuel to get the appliance thoroughly hot.
- Using green or wet wood.
- Closing the draft so far that there is insufficient air for complete combustion.



If it is necessary to clean the glass, buff lightly with a clean dry cloth and non-abrasive cleaner. Clean the glass after the first 10 hours of operation with a recommended appliance glass cleaner. Thereafter, clean as required.

The glass is very strong, but do not let burning fuel rest or fall against it and always close the door gently.

NEVER FORCE OR SLAM IT SHUT!

Do not operate the appliance with broken glass, as leakage of flue gases may result.

Contact your local authorized dealer/distributor for complete cleaning instructions.

If the glass should ever crack or break while the fire is burning, do not open the door until the fire is out. Do not operate the appliance until the glass has been replaced. Contact your local authorized dealer/distributor for replacement parts. **DO NOT SUBSTITUTE MATERIALS.**

7.8 wood

⚠ WARNING

- This appliance is designed to burn natural wood only. Do not burn treated wood, coal, charcoal, coloured paper, cardboard, solvents or garbage. This appliance has not been tested with an unvented gas log set. To reduce risk of fire or injury, do not install an unvented gas log set into the appliance.
- Higher efficiencies and lower emissions generally result when burning air dried seasoned hardwoods, as compared to softwoods or too green or freshly cut hardwoods.
- Burning wet, unseasoned wood can cause excessive creostore accumulation. When ignited, it can cause a chimney fire that may result in a serious house fire.
- Do not store fuel within the clearance to combustibles, or in the space required for re-fueling and ash removal.

Before loading the appliance, ensure all required insulation and baffles are installed and situated properly. For maximum efficiency, when the appliance is thoroughly hot, load it fully to the specified maximum amount and burn at a medium low setting (if equipped). The whiteness of the bricks and the cleanliness of the glass are good indicators of your operating efficiency. Not enough heat is produced when only a few pieces of wood are burned or the wood may not burn completely.

NOTE: When loading the appliance, ensure to keep fuel back from the glass. If coals are to accumulate on the front lip, there is a chance they will fall out when the door is opened.

TYPES OF WOOD

Both hardwood and softwood burn equally well in this appliance but hardwood is denser, will weigh more per cord and burn a little slower and longer.

Manufactured firelogs made by compressing 100% natural wood fibre can be safely used as fuel. Do not use manufactured firelogs if they contain additives such as paraffin, wax, binders etc. Never burn more than two manufactured firelogs at a time.

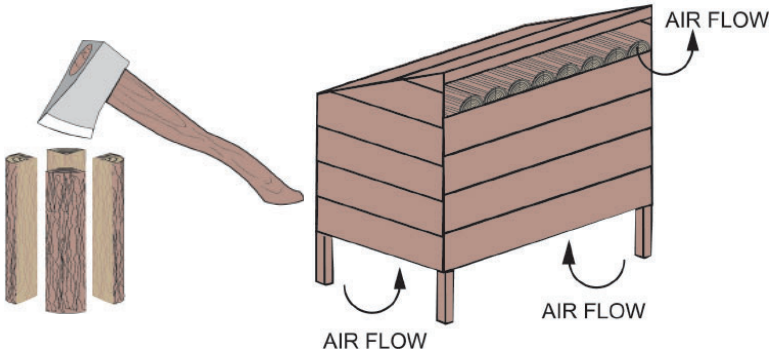

MOISTURE CONTENT

Burn only dry, clean unpainted wood that has been seasoned. It produces more heat and less soot or creosote. Freshly cut wood contains about 50% moisture while after proper seasoning only about 20% of the water remains. As wood is burned, this water boils off consuming energy that should be used in heating. The wetter the wood, the less heat is given off and the more creosote is produced. Dry firewood has cracks in the end of the grain.

STORING WOOD

Firewood should be split and stacked in a manner that allows for full air circulation and covered in early spring to be ready for burning that fall. Dry firewood has cracks in the end grain.

Cut the wood so that it will fit horizontally, front to back, making for easier loading and less of a likelihood that the wood will roll onto the glass.

Fuel for the appliance must not be stored closer than the required clearances to combustibles (heat sensitive material). **NEVER STORE WOOD IN THE ASH PAN COMPARTMENT (if applicable).**

8.0 replacement parts

⚠ WARNING

- Failure to position the parts in accordance with this manual or failure to use only parts specifically approved with this appliance may result in property damage or personal injury.

Contact your dealer for questions concerning prices and policies on replacement parts. Normally, all parts can be ordered through your Authorized dealer / distributor.

For warranty replacement parts, a photocopy of the original invoice will be required to honour the claim.

When ordering replacement parts always give the following information:

- Model & Serial Number of appliance
- Installation date of appliance
- Part number
- Description of part
- Finish

Parts, part numbers, and availability are subject to change without notice.

Parts identified as stocked will be delivered within 2 to 5 business days for most delivery destinations.

Parts not identified as stocked will be delivered within a 2 to 4 week period, for most cases.

Parts identified as 'SO' are special order and can take up to 90 days for delivery.

8.1 overview

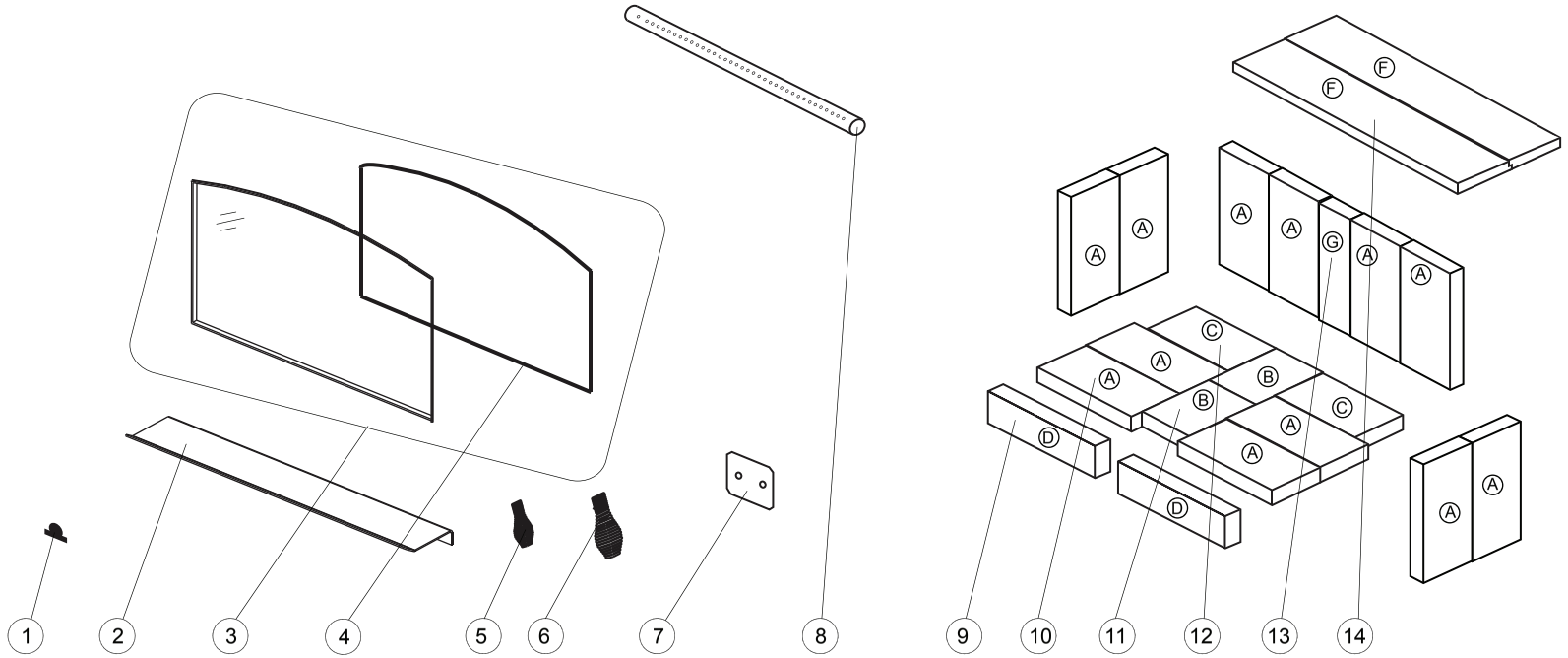

Items may not appear exactly as illustrated.

Ref. No.	Part Number	Description	Stocked
1	W385-0487	Timberwolf logo	Yes
2	W710-0025	Ash lip	
3	W010-2325	Glass / gasket assembly	Yes
4	W370-0121	Gasket kit	
5	W325-0042	Spring handle (Small)	
6	W325-0043	Spring handle (Large)	
7	W510-0013-SER	Ash plug	

Ref. No.	Part Number	Description	Stocked
8	W720-0160	Secondary air tube	
9	W090-0018	Brick D (2.25” x 1.25” x 9”)	Yes
10	W090-0015	Brick A (4.5” x 1.25” x 9”)	Yes
11	W090-0168	Brick B (4.5” x 1.25” x 6.25”)	Yes
12	W090-0167	Brick C (4.5” x 1.25” x 7.625”)	Yes
13	W090-0172	Brick G (2” x 1.25” x 9”)	Yes
14	W010-3564	Top fibre baffle (X2)	Yes

9.1 overview

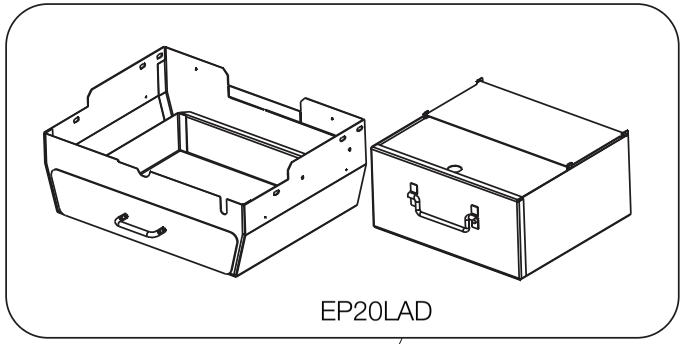

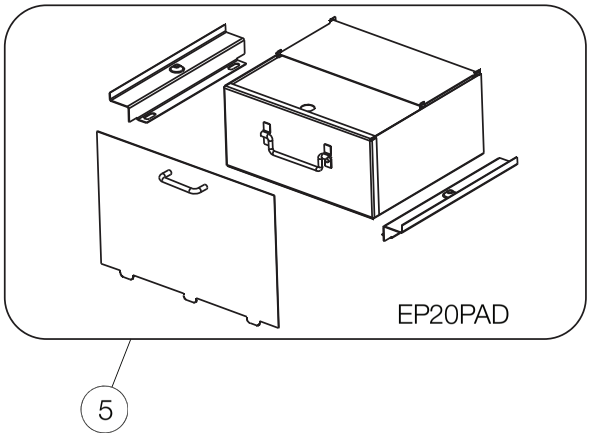

Items may not appear exactly as illustrated.

Ref. No.	Part Number	Description	Stocked
1 *	EPT70	Blower kit	
2 *	EP20P	Pedestal kit	
3 *	EP21L	Leg kit	
4	EP20LAD	Ash pan kit for EP21L leg kit	
5	EP20PAD	Ash pan kit for EP20P pedestal kit	

* Parts not illustrated.

⚠ WARNING

- Turn off the appliance completely and let cool before servicing. Only a qualified service person should service and repair this electric appliance.
- Appliance may be hot, do not service until appliance has cooled.
- Do not use abrasive cleaners.
- When checking connections, installing jumper wires (for test purposes only) or replacing components, unplug appliance from the receptacle to prevent electrical shock or damage to the component.

symptom	test solution
Can't get the fire started.	Not enough kindling / paper? Add more.
	Not enough air? Ensure air control is fully open. Also ensure that the air opening is not obstructed.
	Cold air blockage? Burn a piece of paper to establish a draft.
	Use dry seasoned wood with 20% moisture content.
	Flue blockage? Inspect chimney.
Smokes when door is open.	Cold air blockage? Burn a piece of paper to establish a draft.
	Insufficient draft? Add more pipe.
	Let air stabilize before opening door.
	Ensure baffles are positioned correctly.
	Negative pressure? Open a window near the appliance.
Appliance emits odour.	Paint curing, see "general instructions" section.
Stove doesn't burn hot enough.	Wood has more than 20% moisture.
	Insufficient draft? Add more pipe.
	Not enough air? Ensure air control is fully open. Also ensure that the air opening is not obstructed.
Wood burns too fast.	Air control may need to be adjusted down.
	Check to see ash plug is properly seated (if equipped).
	Check door gasket for adequate seal.
	Wood may be extremely dry.
Dirty glass.	Air control may be closed too far.
	Burn hotter, smaller fires.
	Use well seasoned wood with 20% moisture content.
Blower does not run.	Appliance may not be up to temperature.
	Ensure blower has power.

11.0 warranty

TIMBERWOLF products are manufactured under the strict Standard of the World Recognized ISO 9001 : 2015 Quality Management System.
TIMBERWOLF products are designed with superior components and materials, assembled by trained craftsmen who take great pride in their work. The complete appliance is thoroughly inspected by a qualified and authorized installer, service agency or supplier before packaging to ensure that you, the customer, receives the quality product that you expect from TIMBERWOLF.

TIMBERWOLF WOOD APPLIANCE LIMITED WARRANTY

The following materials and workmanship in your new TIMBERWOLF appliance are warranted against defects as defined below:
The combustion chamber is warranted against defects for a period of 5 years.
The secondary air tubes are warranted against defects for a period of 5 years.
Electrical (110V) components and wearable parts are covered and TIMBERWOLF will provide replacement parts free of charge during the first year of the limited warranty. This covers: blowers, thermal switches, switches, wiring, rheostats, firebrick, ceramic glass (thermal breakage only), fibre baffles and gasketing.*
Any labour related to warranty repair is not covered.
* Construction of models vary. Warranty applies only to components included with your specific appliance.

CONDITIONS AND LIMITATIONS

Wolf Steel warrants its TIMBERWOLF products against manufacturing defects to the original purchaser only. Registering your warranty is not necessary. Simply provide your proof of purchase along with the model and serial number to make a warranty claim. Provided that the purchase was made through an authorized TIMBERWOLF dealer your appliance is subject to the following conditions and limitations:
Warranty coverage begins on the date of original installation.
This factory warranty is non-transferable and may not be extended whatsoever by any of our representatives.
The appliance must be installed by a qualified and authorized installer, service agency or supplier. Installation must be done in accordance with the installation instructions included with the product and all local and national building and fire codes.
This limited warranty does not cover damages caused by misuse, lack of maintenance, accident, alterations, abuse or neglect. Operating the appliance on high for extended periods of time, is neglect. Parts installed from other manufacturers will nullify this warranty.
This limited warranty further does not cover any scratches, dents, corrosion or discoloring caused by excessive heat, abrasive and chemical cleaners nor chipping on porcelain enamel parts, nor any venting components used in the installation of the appliance.
In the first year only, this warranty extends to the repair or replacement of warranted parts which are defective in material or workmanship provided that the product has been operated in accordance with the operation instructions and under normal conditions.
After the first year, with respect to the TIMBERWOLF'S Limited Warranty, Wolf Steel may, at its discretion, fully discharge all obligations with respect to this warranty by refunding to the original warranted purchaser the wholesale price of any warranted but defective parts.
After the first year, Wolf Steel Ltd. will not be responsible for installation, labour or any other costs or expenses related to the reinstallation of a warranted part, and such expenses are not covered by this warranty.
Notwithstanding any provisions contained in the TIMBERWOLF'S Limited Warranty, Wolf Steel's responsibility under this warranty is defined as above and it shall not in any event extend to any incidental, consequential or indirect damages.
This warranty defines the obligations and liability of Wolf Steel with respect to the TIMBERWOLF appliance and any other warranties expressed or implied with respect to this product, its components or accessories are excluded.
Wolf Steel neither assumes, nor authorizes any third party to assume, on its behalf, any other liabilities with respect to the sale of this product.
Wolf Steel will not be responsible for: over-firing, downdrafts, spillage caused by environmental conditions such as rooftops, buildings, nearby trees, hills, mountains, inadequate vents or ventilation, excessive venting configurations, insufficient makeup air, or negative air pressures which may or may not be caused by mechanical systems such as exhaust blowers, furnaces, clothes dryers, etc.
Any damages to appliance, combustion chamber, heat exchanger or other components due to water, weather damage, long periods of dampness, condensation, damaging chemicals or cleaners will not be the responsibility of Wolf Steel.
Regular cleaning of the fine ash generated during the operation of this appliance is a necessary part of maintaining your appliance. Failure of any components, which is attributed to poor maintenance, is not warrantable and will not be covered by this policy.
Wolf Steel reserves the right to have its representative inspect any TIMBERWOLF product or part thereof prior to honouring any warranty claim.
All parts replaced under the Limited Warranty Policy are subject to a single claim.
During the first 10 years Wolf Steel Ltd. will replace or repair the defective parts covered by the lifetime warranty at our discretion free of charge. From 10 years to life, Wolf Steel Ltd. will provide replacement parts at 50% of the current retail price.
All parts replaced under the warranty will be covered for a period of 90 days from the date of their installation.
The manufacturer may require that defective parts or products be returned or that digital pictures be provided to support the claim.
Returned products are to be shipped prepaid to the manufacturer for investigation. If a product is found to be defective, the manufacturer will repair or replace such defect.
Before shipping your appliance or defective components, your dealer must obtain an authorization number. Any merchandise shipped without authorization will be refused and returned to sender.
Shipping costs are not covered under this warranty.
Additional service fees may apply if you are seeking warranty service from a dealer.
Labour, travel, diagnostic tests, shipping and other related charges are not covered by this warranty.

ALL SPECIFICATIONS AND DESIGNS ARE SUBJECT TO CHANGE WITHOUT PRIOR NOTICE DUE TO ON-GOING PRODUCT IMPROVEMENTS.

NAPOLEON CELEBRATING OVER 40 YEARS OF HOME COMFORT PRODUCTS







7200, Route Transcanadienne, Montréal, Québec H4T 1A3
24 Napoleon Road, Barrie, Ontario, Canada L4M 0G8
214 Bayview Drive, Barrie, Ontario, Canada L4N 4Y8
103 Miller Drive, Crittenden, Kentucky, USA 41030

Phone: 1-866-820-8686
napoleon.com

ENGLISH
FRENCH PG. 41

This wood appliance needs periodic inspection and repair. It is against United States federal regulations to operate this wood appliance in a manner inconsistent with the operating instructions in this manual.

INSTALLATION AND OPERATION MANUAL

INSTALLER:
Leave this manual with the appliance.
CONSUMER:
Retain this manual for future reference.

SAFETY INFORMATION

⚠ WARNING

If the information in these instructions are not followed exactly, a fire or explosion may result causing property damage, personal injury or death. Please read the entire manual before you install and use your appliance. This heater has not been tested with an unvented gas log set. To reduce risk of fire or injury, do not install an unvented gas log set into the heater.

- This heater can be very hot when burning.
- Combustible materials such as firewood, wet clothing, etc. placed too close can catch fire.
- Children and pets must be kept from touching the heater when it is hot.
- The chimney must be sound and free of cracks. Before installing this appliance, contact the local building or fire authority and follow their guidelines.
- Always operate this appliance with the door(s) or screen (where applicable) tightly closed.
- Burn wood behind the log retainer directly on the firebricks.
- Do not use an elevated grate or otherwise raise the fire.
- This appliance is designed to burn natural wood only. Higher efficiencies and lower emissions generally result when burning air dried seasoned hardwoods, as compared to softwoods or to green or freshly cut hardwoods.
- Do not start a fire with chemicals or fluids such as gasoline, engine oil, etc.
- Do not burn trash or garbage, lawn clippings/waste, rubber, waste petroleum products, paints or paint thinners/solvents, plastic, materials containing asbestos, construction debris, railroad ties or treated wood, manure or animal remains, salt water driftwood or salted materials, unseasoned wood, coal, charcoal, coloured paper, cardboard, plywood or particleboard. Burning these materials may result in release of toxic fumes or render the appliance ineffective and cause smoke.
- Do not let the appliance become hot enough for any part to glow red.

Wood Stoves ONLY

- At least 14 squares inches (90.3 square centimeters) of outside air must be admitted to the room or directly to the appliance through a 4” (101.6mm) diameter pipe.
- KEEP THE STOVE TOP TEMPERATURE BELOW 700°F (371°C). Attempts to achieve heat output rates that exceed design specifications can result in steel distortion and damage.

S15

(S15 illustrated)

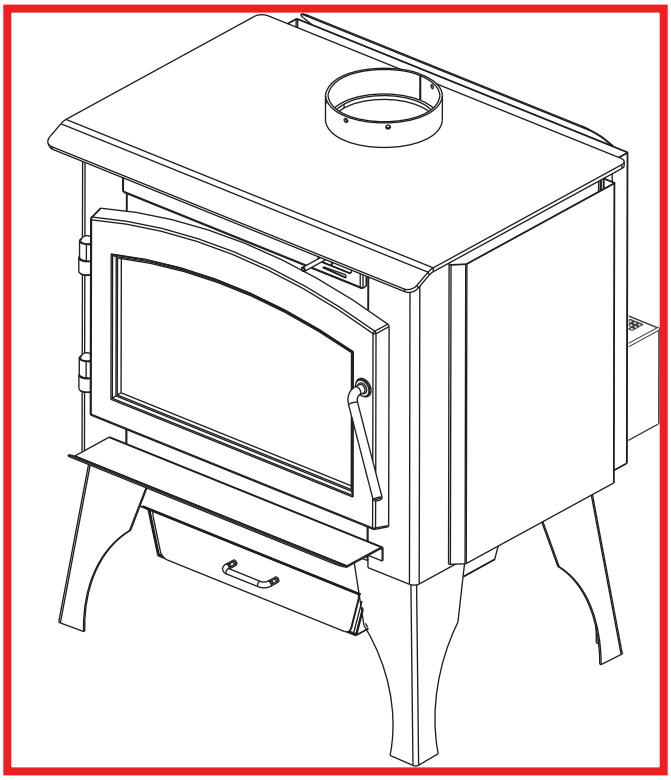

FOR INDOOR USE ONLY

U.S. ENVIRONMENTAL PROTECTION AGENCY (E.P.A.) CERTIFIED TO COMPLY WITH 2020 PARTICULATE EMISSION STANDARDS USING CORD WOOD. THIS APPLIANCE HAS BEEN TESTED BY POLYTESTS AND LISTED BY OMNI-TEST LABORATORIES, INC. TO STANDARDS: CSA B366.2, ULC S627, AND UL 1482. ASTM E3053-17; ASTM E2515-11 METHODS ALT-125 AS REFERENCED INTO 40 CFR PART 60 SUBPART AAA. OMNI REPORT NUMBER 0415WS014E.

APPLY SERIAL NUMBER LABEL FROM CARTON

Serial No. XXXXXX000000
MODEL NO.

Wolf Steel Ltd., 24 Napoleon Rd., Barrie, ON, L4M 0G8 Canada / 103 Miller Drive, Crittenden, Kentucky, USA, 41030
Phone 1 (866) 820-8686 • www.napoleon.com • hearth@napoleon.com

safety information

⚠ WARNING



- This appliance is hot when operated and can cause severe burns if contacted.
- Any changes or alterations to this appliance or its controls can be dangerous and is prohibited.
- Do not operate appliance before reading and understanding operating instructions. Failure to operate appliance according to operating instructions could cause fire or injury.
- Before installing this appliance, contact the local building or fire authority and follow their guidelines.
- This appliance must be installed by a qualified installer. Never try to repair or replace any part of the appliance unless instructions are given in this manual. All other work should be done by a trained technician.
- Risk of burns. The appliance should be turned off and cooled before servicing.
- Do not operate without fully assembling all components. Do not install damaged, incomplete or substitute components.
- Do not let the appliance become hot enough for any part to glow red.
- Risk of cuts and abrasions. Wear protective gloves, footwear and safety glasses during installation. Sheet metal edges may be sharp.
- All wiring should be done by a qualified electrician and shall be in compliance with local codes. in the absence of local codes, use the current CSA22.1 Canadian Electric Code in Canada or the current National Electric Code ANSI/NFPA No. 70 in the United States.
- If equipped, burning your appliance with the ash dump door ajar creates a fire hazard that may result in discolouration to the door, internal damage to the appliance or a house and/or chimney fire.
- Do not connect this appliance to a chimney flue serving another appliance.
- Clothing or other flammable material should not be placed on or near the appliance. Objects placed in front of the appliance must be kept a minimum of 48” (121.9cm) away from the front face of the appliance.
- Due to high temperatures, the appliance should be located out of traffic and away from furniture and draperies.
- Even after the appliance is off, it will remain hot for an extended period of time.
- Any safety screen or guard removed for servicing must be replaced prior to operating the appliance.
- Under no circumstances should this appliance be modified.
- This appliance must not be connected to a chimney flue pipe servicing a separate solid fuel burning appliance.
- Do not operate the appliance with the glass door removed, cracked or broken. Replacement of the glass should be done by a licensed or qualified service person.
- Do not strike or slam shut the appliance glass door.
- Only doors / optional fronts certified with the appliance are to be installed on the appliance.
- If the appliance is not properly installed, a house fire may result. Do not expose the appliance to the elements (ex. rain, etc.) and keep the appliance dry at all times. Wet insulation will produce an odour when the appliance is used.
- The chimney must be sound and free of cracks. Clean your chimney a minimum of twice a year and as required.
- Children and adults should be alerted to the hazards of high surface temperature and should stay away to avoid burns or clothing ignition.
- Young children should be carefully supervised when they are in the same room as the appliance. Toddlers, young children and others may be susceptible to accidental contact burns. A physical barrier is recommended if there are at risk individuals in the house. To restrict access to an appliance or stove, install an adjustable safety gate to keep toddlers, young children and other at risk individuals out of the room and away from hot surfaces.
- Ensure you have incorporated adequate safety measures to protect infants/toddlers from touching hot surfaces.
- Check with your local hearth specialty dealer for safety screens and hearth guards to protect children from hot surfaces. These screens and guards must be fastened to the floor.
- Keep the packaging material out of reach of children and dispose of the material in a safe manner. As with all plastic bags, these are not toys and should be kept away from children and infants.
- Do not start a fire with chemicals or fluids such as gasoline, engine oil, etc.

⚠ WARNING

- Your appliance requires periodic maintenance and cleaning. Failure to maintain your appliance may lead to smoke spillage in your home.
- Ashes must be disposed in a metal container with a tight lid and placed on a non-combustible surface well away from the home or structure until completely cool.
- Ensure clearances to combustibles are maintained when building a mantel or shelves above the appliance. Elevated temperatures on the wall or in the air above the appliance can cause melting, discolouration or damage to decorations, a TV or other electronic components.

⚠ WARNING: This product can expose you to chemicals including lead and lead compounds, which are known to the State of California to cause cancer, and chemicals including carbon monoxide, which are known to the State of California to cause birth defects or other reproductive harm. For more information, go to www.P65Warnings.ca.gov.

For wood appliances:

- Lower emissions generally result when burning air dried seasoned hardwoods, as compared to softwoods or too green or freshly cut hardwoods. Burning wet unseasoned wood can cause excessive creosote accumulation. When this is ignited it can cause a chimney fire that may result in a serious house fire.
- This appliance is designed to burn natural wood only. Do not burn trash or garbage, lawn clippings / waste, rubber, waste petroleum products, paints or paint thinners / solvents, plastic, materials containing asbestos, construction debris, railroad ties or treated wood, manure or animal remains, salt water driftwood or salted materials, unseasoned wood, coal, charcoal, coloured paper, gift wrapping, cardboard, plywood or particleboard. Burning these materials may result in release of toxic fumes or render the appliance ineffective and cause smoke.
- Burn wood directly on the firebricks. Do not elevate grate or otherwise raise the fire.
- Do not store wood within appliance installation clearances or within the space required for re-fueling and ash removal.
- If equipped, the catalyst must be installed and in good working order. It is recommended that the catalyst is inspected at least three times per heating season.

EN

table of contents

1.0 general information 5
1.1 dimensions 5
1.2 specifications 6
1.3 general instructions 6
1.4 general information 7
1.5 rating plate information 8

2.0 installation planning 9
2.1 appliance placement 9
2.2 minimum clearance to combustibles 9
2.3 alcove installation 10
2.4 floor protection 10
2.5 outside air 10

3.0 installation 11
3.1 chimney 11
3.1.1 chimney connection 12
3.1.2 adding sections 13
3.1.3 typical through the ceiling 14
3.1.4 typical through the wall 15
3.1.5 typical existing masonry 16

4.0 finishing 17
4.1 leg installation 17
4.2 pedestal installation 18
4.3 door removal 18
4.4 door handle installation 19
4.5 secondary air tubes 20
4.6 brick and baffle installation 21
4.7 ash lip installation 22

5.0 optional installation 23
5.1 blower kit installation 23
5.2 ash drawer kit (EP20LAD) 24
5.3 ash pan kit (EP20PAD) 25

6.0 operation 26
6.1 optimum burn method 27
6.2 air control 27
6.3 fire extinguishers / smoke & carbon monoxide detectors 27
6.4 fuel 28
6.5 lighting a fire 28
6.5.1 flash fire 28
6.5.2 extended fire 29
6.6 smoking 29
6.7 optional fan operation 29

7.0 maintenance 30
7.1 ash removal procedures 30
7.1.1 ash removal with ash drawer 30
7.2 creosote formation and removal 31
7.3 runaway or chimney fire 31
7.4 chimney cleaning 31
7.5 door glass replacement 32
7.6 gasket replacement 32
7.7 care of glass 32
7.8 wood 33

8.0 replacement parts 34
8.1 overview 35

9.0 accessories 36
9.1 overview 36

10.0 troubleshooting 37

11.0 warranty 38

12.0 notes 39

note:

The information throughout this manual is believed to be correct at the time of printing. Wolf Steel Ltd. reserves the right to change or modify any information within this manual at any time without notice. Changes, other than editorial, are denoted by a vertical line in the margin.

1.1 dimensions

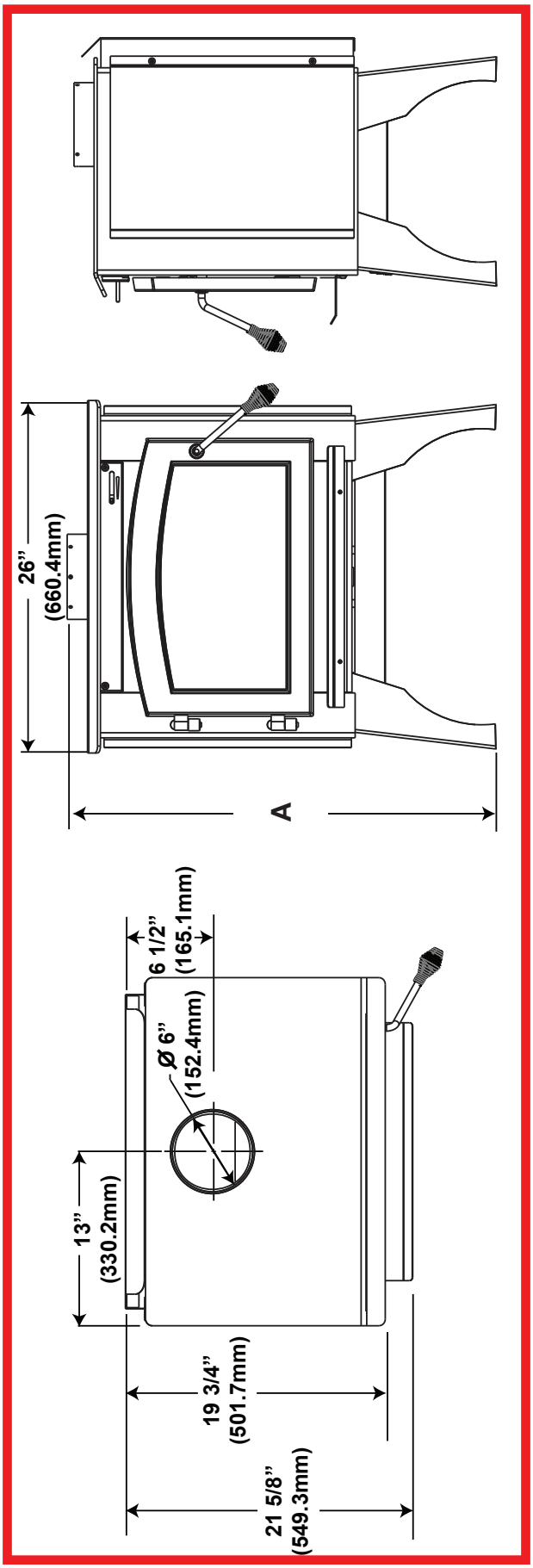

	A
Pedestal Model	29 7/8” (759mm)
Leg Model	31 1/2” (800mm)

dimensions

1.2 specifications

Specifications	
Emissions	1.57 Grams / Hr
Efficiency	71%
Chamber (D.W.H)	11 5/8" x 20 7/8" x 11 5/8" (295mm x 530mm x 295mm)
Capacity	1.5 Cubic Feet (0.04 Cubic Meters)
Approx. Area Heated **	600-1800 Square Feet (56-167m²)
Maximum Heat Output ***	45,000 BTU /Hr
Heat Output *	14,582 - 30,042 BTU /Hr
Duration Low Fire **	6 Hours
Weight W/O Bricks	180 lbs (82kg)
Weight of Bricks	47 lbs (21kg)
Ideal Wood Length	16" (406mm)
Minimum Stack Height ****	15 feet (4.5m)
Efficiency Standard	B415.1-10

* As tested using test method ALT-125.

** Figures will vary considerably with individual conditions.

*** Wolf Steel Ltd. estimated realistic BTU/hr with hardwood logs and regular refueling.

**** Required in order to achieve proper draft.

1.3 general instructions

⚠ WARNING

- All wiring should be done by a qualified electrician and shall be in compliance with local codes. In the absence of local codes, use the current CSA C22.1 Canadian Electric Code (in Canada) or the ANSI / NFPA Nº 70 National Electric Code in the United States.
- Burning your appliance with the ash well open or the ash door ajar creates a fire hazard and may cause internal damage to the appliance or a house and/or chimney fire.
- Do not connect this appliance to a chimney flue serving another appliance. Do not connect to any air distribution duct or system.
- Provide adequate clearance for servicing and operating the appliance.
- Provide adequate ventilation.
- Never obstruct the front opening of the appliance.
- Objects placed in front of the appliance must be kept a minimum of 48” (121.9cm) from the front face of the appliance.
- Do not install in a mobile home.

- Before beginning your installation, consult with your local building code agency or fire officials and insurance representative to ensure compliance.

- Non-toxic smoke will be emitted during the paint curing process, to help dissipate the smoke open a window near the appliance.

- Remove any dust or debris off the top of the appliance before firing the appliance as the paint will become soft as the appliance heats up and will harden as the appliance cures. To cure the paint on your appliance burn your appliance moderately hot during the first few fires.

- To keep the gasket from sticking to the appliance as the paint is curing, periodically open the door every 5-10 minutes.

- For the first two weeks use generous amounts of fuel and burn the appliance with the damper wide open for an hour as the appliance goes through a process of eliminating moisture in the steel and firebricks. The initial heat output will be reduced while the moisture is being drawn from the appliance and it will be necessary to build several hot fires to remove this moisture. **DURING THIS PROCESS DO NOT OVERFIRE THE APPLIANCE. REDUCE THE AMOUNT OF AIR COMING INTO THE APPLIANCE IF THE APPLIANCE OR CHIMNEY BECOMES RED.**

1.4 general information

⚠ WARNING

- Do not operate this appliance without the legs or pedestal installed.

This model was specifically designed over many months of research to meet the 2020 U.S.A. EPA particulate emission standards and has been extensively tested in Canadian laboratories. This system is the most efficient, simple and trouble free we know and works as follows:

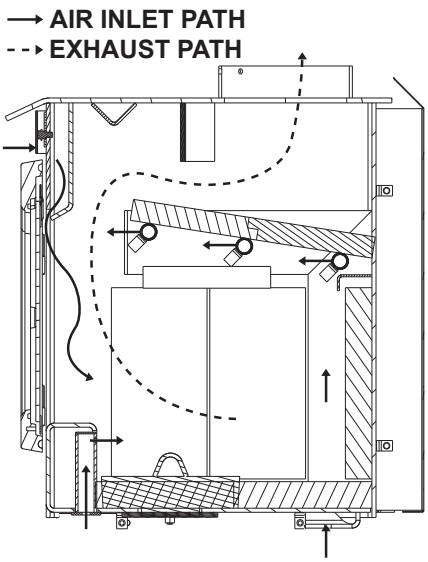

Secondary air from the rear hole travels up the back in the secondary air housing to the manifold located at the top and shoots out laterally to oxidize the gases below the smoke exit.

The lower combustion chamber is lined with high temperature firebricks on 2 sides, the back and across the bottom, with a layer of fibre baffles at the top to maintain a high temperature in the combustion chamber so that gases mixing with the preheated air from the secondary air manifold tube are easily ignited and burned. The appliance sides and back are shielded to direct the heat upwards and forwards into the room.

Be sure to provide sufficient combustion air. There are many other appliances in your home competing for air such as: a kitchen range hood, forced air heating devices, clothes dryer or a bathroom exhaust fan.

After extended periods of non-operation such as following a vacation or a warm weather season, the appliance may emit a slight odour for a few hours. This is caused by dust particles on the firebox burning off. Open a window to sufficiently ventilate the room.

If you experience smoking problems, you may been to open a door, a window or otherwise provide some method of supplying combustion air to the appliance.

NATIONAL FIREPLACE INSTITUTE NFI CERTIFIED www.nficertified.org

We suggest that our woodburning hearth products be installed and serviced by professionals who are certified in the U.S. by the National Fireplace Institute® (NFI) as NFI Woodburning Specialists or who are certified in Canada by Wood Energy Technical Training (WETT).

Wood Energy Technical Training www.wettinc.ca

Do not use makeshift compromises during installation. Do not block or restrict air, grille or louvre openings! Do not add a hood.
Burning your appliance with the door open or ajar creates a fire hazard that may result in a house and/or chimney fire.
All venting connections must be in compliance with the chimney manufacturers installation instructions. Clearances referred to throughout this manual are the minimum requirements.

Your appliance must be installed in accordance with all national and local building code standards and the standard of Chimney and Appliances, Vents and Solid Fuel Burning Appliances NFPA #211. Consult the authority having jurisdiction (such as municipal building department, fire department, fire prevention bureau, etc.) to determine the need to obtain a permit. If you are in doubt about the proper installation for your situation, contact your dealer or local building or fire official. The manufacturer does not guarantee that this appliance and its options will completely heat your entire home.

Expansion / contraction noises during heating up and cooling down cycles are normal and to be expected.

It is recommended that in all cases, the appliance be secured to the floor. Use the pallet packing brackets to accomplish this.

dimensions

1.5 rating plate information

This illustration is for reference only. Refer to the rating plate on the appliance for accurate information

REPORT NO. / NUMÉRO DE RAPPORT:
0415WS014E

LISTED SOLID FUEL BURNING SPACE HEATER / POÊLE À COMBUSTIBLE SOLIDE HOMOLOGUÉ.
TESTED TO: / TESTÉ SELON:
UL1482 - 2010 / ULC S627 - 00
MODEL / MODÈLE: S15

THIS WOOD HEATER NEEDS PERIODIC INSPECTION AND REPAIR FOR PROPER OPERATION. CONSULT THE OWNER'S MANUAL FOR FURTHER INFORMATION. IT IS AGAINST FEDERAL REGULATIONS TO OPERATE THIS WOOD HEATER IN A MANNER INCONSISTENT WITH THE OPERATING INSTRUCTIONS IN THE OWNER'S MANUAL. / CE POÊLE À BOIS DOIT ÊTRE INSPECTÉ ET RÉPARÉ PÉRIODIQUEMENT POUR UN FONCIONNEMENT CORRECT. CONSULTEZ LE MANUEL DU PROPRIÉTAIRE POUR PLUS D'INFORMATIONS. IL EST CONTRE LES RÈGLEMENTS FÉDÉRAUX POUR FAIRE FONCTIONNER CE POÊLE À BOIS D'UNE MANIÈRE INCOMPATIBLE AVEC LES INSTRUCTIONS DE FONCTIONNEMENT DANS LE MANUEL DU PROPRIÉTAIRE.

INSTALL AND USE ONLY IN ACCORDANCE WITH WOLF STEEL LTD.'S INSTRUCTIONS. CONTACT LOCAL BUILDING OR FIRE OFFICIALS ABOUT RESTRICTIONS AND INSTALLATION INSPECTION IN YOUR AREA.
MINIMUM CEILING HEIGHT: 7FT (2.13M)
HEARTH EXTENSION / COMBUSTIBLE FLOOR PROTECTION: IF INSTALLED ON A COMBUSTIBLE FLOOR, UNIT MUST BE PLACED ON A NON-COMBUSTIBLE FLOOR PROTECTOR EXTENDING 18" (455MM) (CANADA) / 16" (406MM) (U.S.A.) IN FRONT AND 8" (205MM) TO THE SIDES AND BACK.
CHIMNEY TYPE: MINIMUM 6" (152MM) DIAMETER LISTED (UL 103HT) RESIDENTIAL CHIMNEY.
CHIMNEY CONNECTOR: 6" (152MM) DIAMETER MINIMUM 24 GAUGE STEEL MINIMUM CLEARANCE FROM HORIZONTAL CONNECTOR AND CEILING 18" (455MM).
DO NOT OBSTRUCT SPACE UNDER HEATER.
SPECIAL METHODS ARE REQUIRED WHEN PASSING A CHIMNEY THROUGH A WALL OR CEILING. SEE INSTRUCTIONS AND BUILDING CODES.
DO NOT CONNECT THIS UNIT TO A CHIMNEY FLUE SERVING ANOTHER APPLIANCE.
FUEL: FOR USE WITH SOLID WOOD FUEL ONLY. DO NOT USE GRATE OR ELEVATE FIRE. BUILD WOOD FIRE DIRECTLY ON HEARTH.
WARNING: RISK OF SMOKE SPILLAGE. OPERATE ONLY WITH DOOR FULLY CLOSED.
REPLACE GLASS ONLY WITH CERAMIC GLASS.
DO NOT OVERFIRE. IF HEATER OR CHIMNEY CONNECTORS GLOW, YOU ARE OVERFIRING. INSPECT AND CLEAN CHIMNEY FREQUENTLY. UNDER CERTAIN CONDITIONS OF USE CREOSOTE BUILD UP MAY OCCUR RAPIDLY.
OPTIONAL LEGS: IF TO BE INSTALLED WITH OPTIONAL LEGS, LEGS MUST BE INSTALLED PRIOR TO OPERATION.
OPTIONAL BLOWER KIT: EP65M, 115V, 60HZ, 0.82AMP. ROUTE CORD AWAY FROM UNIT.
DANGER: RISK OF ELECTRICAL SHOCK. DISCONNECT POWER BEFORE SERVICING UNIT.

POUR INSTALLATION ET UTILISATION CONFORMÉMENT AUX INSTRUCTIONS DE WOLF STEEL LTÉE. RENSEIGNEZ-VOUS AUPRÈS DES AUTORITÉS LOCALES DU BÂTIMENT OU DU SERVICE DES INCENDIES AU SUJET DES RESTRICTIONS ET DES INSPECTIONS D'INSTALLATION DANS VOTRE RÉGION.
HAUTEUR DE PLAFOND MINIMAL 7" (2,13M).
PROLONGEMENT D'ÂTRE/PROTECTION DU PLANCHER COMBUSTIBLE: SI INSTALLÉ SUR UN PLANCHER COMBUSTIBLE, L'APPAREIL DOIT ÊTRE PLACÉ SUR UNE PLAQUE PROTECTRICE INCOMBUSTIBLE S'ÉTENDANT SUR 18" (455mm) (CANADA) / 16" (406MM) (É.U.) À L'AVANT ET 8" (205MM) À L'ARRIÈRE ET SUR LES CÔTÉS.
TYPE DE CHEMINÉE: CHEMINÉE RÉSIDENTIELLE DE 6" DE DIAMÈTRE (152MM) HOMOLOGUÉE (UL 103HT).
RACCORD DE CHEMINÉE: DIAMÈTRE DE 6" (152MM) D'ACIER DE CALIBRE 24 MINIMUM. 18" (455MM) DE DÉGAGEMENT MINIMAL ENTRE LE RACCORD HORIZONTAL ET LE PLAFOND.
NE RIEN ENTREPOSER SOUS LE CHAUFFAGE.
DES MÉTHODES SPÉCIALES SONT REQUISES LORSQUE UNE CHEMINÉE TRAVERSE UN MUR OU UN PLAFOND. VOIR LES INSTRUCTIONS ET LES CODES DU BÂTIMENT.
NE PAS RACCORDER À LA CHEMINÉE D'UN AUTRE APPAREIL.
COMBUSTIBLE: POUR USAGE AVEC LE BOIS SEULEMENT. N'UTILISEZ PAS DE CHENET OU NE SURÉLÉVEZ PAS LE BOIS. PRÉPAREZ LE FEU DIRECTEMENT SUR L'ÂTRE.
AVERTISSEMENT: RISQUE D'ÉCHAPPEMENT DE FUMÉE. TENIR LA PORTE FERMÉE LORSQUE LE POÊLE FONCTIONNE. REMPLACEZ LA VITRE PAR UNE VITRE EN CÉRAMIQUE SEULEMENT.
NE SURCHAUFFEZ PAS L'APPAREIL. SI L'APPAREIL OU LES RACCORDS ROUGEOIENT, L'APPAREIL SURCHAUFFÉE. INSPECTEZ ET NETTOYEZ LA CHEMINÉE FRÉQUEMMENT. DANS CERTAINES CONDITIONS, DES DÉPÔTS DE CRÉOSOTE PEUVENT SE FORMER RAPIDEMENT.
PATTES OPTIONNELLES : SI LES PATTES OPTIONNELLES SONT INSTALLÉES, ELLES DOIVENT ÊTRE INSTALLÉES AVANT DE FAIRE FONCTIONNER L'APPAREIL.
SOUFFLERIE OPTIONNELLE: EP65M, 115V, 60HZ, 0,82A. TENEZ LE CORDON ÉLECTRIQUE LOIN DE L'APPAREIL.
DANGER: RISQUE DE SECOUSSE ÉLECTRIQUE. DÉBRANCHEZ AVANT DE PROCÉDER À L'ENTRETIEN.

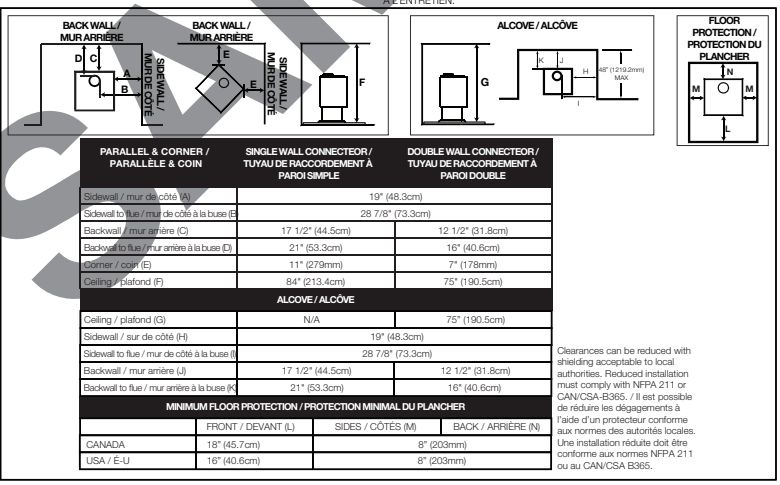

PARALLEL & CORNER / PARALLÈLE & COIN	SINGLE WALL CONNECTEOR / TUYAU DE RACCORDEMENT À PAROI SIMPLE	DOUBLE WALL CONNECTEOR / TUYAU DE RACCORDEMENT À PAROI DOUBLE
Sidewall / mur de côté (A)	19" (48.3cm)	
Sidewall to flue / mur de côté à la buse (B)	28 7/8" (73.3cm)	
Backwall / mur arrière (C)	17 1/2" (44.5cm)	12 1/2" (31.8cm)
Backwall to flue / mur arrière à la buse (D)	21" (53.3cm)	16" (40.6cm)
Corner / coin (E)	11" (279mm)	7" (178mm)
Ceiling / plafond (F)	84" (213.4cm)	75" (190.5cm)
ALCOVE / ALCÔVE		
Ceiling / plafond (G)	N/A	75" (190.5cm)
Sidewall / sur de côté (H)	19" (48.3cm)	
Sidewall to flue / mur de côté à la buse (I)	28 7/8" (73.3cm)	
Backwall / mur arrière (J)	17 1/2" (44.5cm)	12 1/2" (31.8cm)
Backwall to flue / mur arrière à la buse (K)	21" (53.3cm)	16" (40.6cm)

MINIMUM FLOOR PROTECTION / PROTECTION MINIMAL DU PLANCHER			
	FRONT / DEVANT (L)	SIDES / CÔTÉS (M)	BACK / ARRIÈRE (N)
CANADA	18" (45.7cm)	8" (203mm)	
USA / É-U	16" (40.6cm)	8" (203mm)	

Clearances can be reduced with shielding acceptable to local authorities. Reduced installation must comply with NFPA 211 or CAN/CSA-B365. / Il est possible de réduire les dégagements à l'aide d'un protecteur conforme aux normes des autorités locales. Une installation réduite doit être conforme aux normes NFPA 211 ou au CAN/CSA B365.

MANUFACTURE DATE: / DATE DE FABRICATION:
YEAR: ☐ 2019 ☐ 2020 ☐ 2021 ☐ 2022 ☐ 2023 ☐ 2024
MONTH: ☐1 ☐2 ☐3 ☐4 ☐5 ☐6 ☐7 ☐8 ☐9 ☐10 ☐11 ☐12

CAUTION: **HOT WHILE IN OPERATION. DO NOT TOUCH. KEEP CHILDREN, CLOTHING AND FURNITURE AWAY. CONTACT MAY CAUSE SKIN BURNS. SEE NAMEPLATE AND INSTRUCTIONS.**

ATTENTION: **QUAND L'APPAREIL FONCTIONNE, LA SURFACE DEVIENT CHAUDE. NE PAS TOUCHER. TENIR LES ENFANTS, LES VÊTEMENTS ET LES MEUBLES À L'ÉCAR. LE CONTACT PEUT CAUSER DES BRÛLURES À LA PEAU. VOIR LA PLAQUE D'HOMOLOGATION ET LES INSTRUCTIONS.**

U.S. ENVIRONMENTAL PROTECTION AGENCY Certified to comply with 2020 particulate emission standards using cordwood.
Certifié conforme à la norme d'émanation de particles de 2020 en utilisant bois de corde. 40 CFR Part 60, Subpart AAA
1.57 Grams Per Hour / 2020 Cordwood / 1,57 Grammes par heure / Bois de Corde 2020. Efficiency / efficacité: 71%.

WOLF STEEL LTD.
24 NAPOLEON ROAD, BARRIE, ON, L4M 0G8 CANADA

NAC GUANGZHOU P.R.C.
NO.69 HEFENG ROAD, GUANGZHOU,CHINA

S15

W385-2367

SAMPLE

note:

The rating plate must remain with the appliance at all times. It must not be removed.

2.0 installation planning

2.1 appliance placement

Have an authorized dealer install the appliance. If you install the appliance yourself, have your dealer review your installation plans and/or installation. Draw out a detailed plan of the installation including dimensions and verify the dimensions with the requirements listed in this manual.

You may wish to adjust the appliance position slightly to ensure the vent does not intersect with a framing member. Appliance must be positioned so that no combustibles are within, or can swing within (e.g. drapes, doors), 48” (121.9cm) of the front of the appliance.

2.2 minimum clearance to combustibles

⚠ WARNING

- Do not install into any area having less than 7 feet (2.1m) (ceiling to appliance bottom, excluding hearth height).

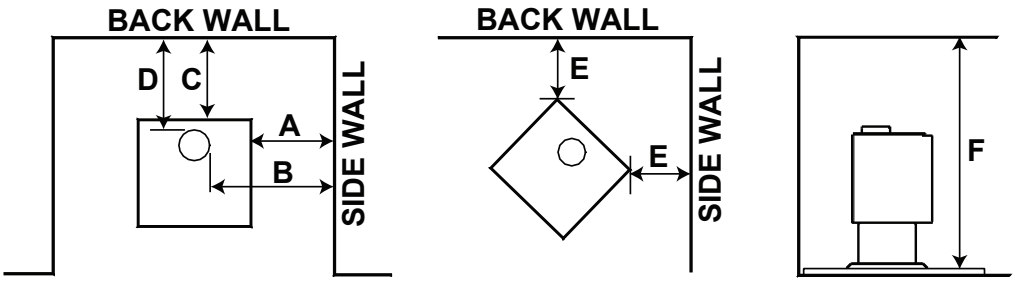

PARALLEL & CORNER	SINGLE WALL CONNECTOR	DOUBLE WALL CONNECTOR
Sidewall (A)	19" (48.3cm)	
Sidewall to flue (B)	28 7/8" (73.3cm)	
Backwall (C)	17 1/2" (44.5cm)	12 1/2" (31.8cm)
Backwall to flue (D)	21" (53.3cm)	16" (40.6cm)
Corner (E)	11" (279mm)	7" (178mm)
Ceiling (F)	84" (213.4cm)	75" (190.5cm)
Clearances can be reduced with shielding acceptable to local authorities. Reduced installation must comply with NFPA 211 or CAN/CSA-B365.		

installation planning

2.3 alcove installation

Your appliance may be installed, using a listed double wall connector, such as Security DL6 in Canada, the Simpson Duravent Plus DVL in the USA or an equivalent double wall connector, into an alcove having a depth of no more than 4 feet and a height of at least 6'3". The minimum clearances are as shown.

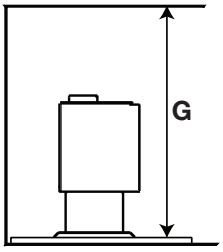

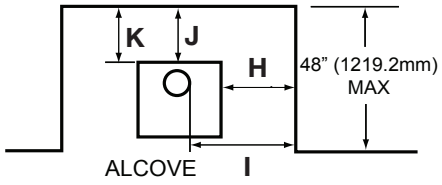

ALCOVE		
PARALLEL & CORNER	**SINGLE WALL CONNECTOR**	**DOUBLE WALL CONNECTOR**
Ceiling (G)	N/A	75" (190.5cm)
Side wall (H)	19" (48.3cm)	
Sidewall to flue (I)	28 7/8" (73.3cm)	
Backwall (J)	17 1/2" (44.5cm)	12 1/2" (31.8cm)
Backwall to flue (K)	21" (53.3cm)	16" (40.6cm)
NOTE: Minimum width is 64" (162.6cm), and minimum depth is 32" (81.3cm).		

2.4 floor protection

If the appliance is to be installed on top of a combustible floor, it must be placed on an approved non-combustible hearth pad, that extends 8" (203mm) beyond the appliance sides and back and 18" (45.7cm) to the front. The reduced clearance from the back of the appliance may result in the appliance pad terminating shorter than 8" (203mm) beyond the appliance.

note:

Floor protection is required for spark and ash shielding, but not for limiting floor temperatures from the radiant heat of the appliance. The appliance was designed and safety-tested so that without any protection, the floor would not overheat.

Refer to local building codes for suitable floor protection materials.

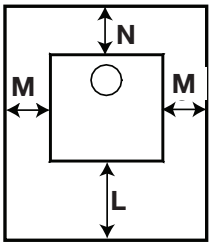

MINIMUM FLOOR PROTECTION			
	FRONT (L)	**SIDES (M)**	**BACK (N)**
CANADA	18" (45.7cm)	8" (203mm)	
USA	16" (406mm)	8" (203mm)	

note:

If a section of horizontal chimney connector is used, floor protection is required under the chimney connector and 2" (51mm) beyond each side.

2.5 outside air

The following are signs that fresh air may be required:

- When there is combustion present: Wood burns poorly, smoke spills, back-draft takes place and your chimney does not draw steadily.
- In the winter there is too much condensation on the windows.
- Opening a window seems to alleviate the above symptoms.
- A ventilation system is installed in the house.
- Other devices are present that exhaust house air.
- The house has tight fitting windows and/or is equipped with a well-sealed vapour barrier.

Systems such as HRV's are designed to bring fresh air into your home and will resolve these related performance issues with your appliance.

⚠ WARNING

- Wear gloves, protective footwear and safety glasses for protection.
- Carefully follow the instructions for assembly of the pipe and other parts needed to install the appliance. Failure to do so may result in a fire, especially if combustibles are too close to the appliance or chimney and air spacers are blocked, preventing the free movement of cooling air.
- Do not draw outside air from garage spaces. Exhaust products of gasoline engines are hazardous. Do not install outside air ducts such that the air may be drawn from attic spaces, basements or above the roofing where other heating appliances or fans and chimneys exhaust or utilize air. These precautions will reduce the possibility of appliance smoking or air flow reversal. The outside air inlet must remain clear of leaves, debris, ice and/or snow. It must be unrestricted while appliance is in use to prevent room air starvation which can cause smoke spillage and an inability to maintain a fire. Smoke spillage can also set off smoke alarms.
- Negative pressure within your home may inadvertently affect your appliance.
- To prevent contact with sagging or loose insulation, the appliance must not be installed against vapour barriers or exposed insulation. Localized overheating could occur and a fire could result.
- Do not use makeshift compromises during installation. Do not block or restrict air, grille or louvre openings. Do not add a hood.
- To prevent personal injury, keep hand tools in good condition, sharpen cutting edges and make sure tool handles are secure.
- Always maintain the minimum air space required in the enclosure to prevent fires.
- Check with local building officials for any permits required for installation of this appliance and notify your insurance company prior to proceeding.

3.1 chimney

⚠ WARNING

- Never install a single wall slip section or smoke pipe in a chase structure. The higher temperature of this single wall pipe may radiate sufficient heat to combustible chase materials to cause a fire.
- Do not connect this appliance to a chimney system serving another appliance.
- To avoid danger of fire, all instructions must be strictly followed, including the provision of air space clearance between chimney system and enclosure. To protect against the effects of corrosion on those parts exposed to the weather, we recommend that the chase top be painted with a rust-resistant paint.
- Do not fill any framed space around the chimney with insulation or any other material. Insulation placed in this area could cause adjacent combustibles to overheat.
- Maintain a minimum 2” (51mm) air clearance to all parts of the chimney system at all times (this excludes the chimney connection). Failure to maintain this 2” (51mm) air clearance will cause a structure fire. Never fill this space with any type of material.
- Detailed instructions for installation of the chase top, storm collar and termination cap are packaged with these parts.
- Do not cut rafters or ceiling joists without first consulting a building official to ensure structural integrity is not compromised.
- Firestop spacers must be used whenever the chimney penetrates a ceiling/floor area.
- The total horizontal vent length should not exceed 40% of the chimney height above the appliance all horizontal smoke pipe must slope slightly upwards a minimum of 1/4” (6.4mm) per foot and all connections must be tight and secured by three sheet metal screws equally spaced. An uninsulated smoke pipe shall not pass through an attic, roof space, closet or similar concealed space, or through a floor, ceiling, wall or partition, or any combustible constructions.
- Do not use any makeshift materials during installation.

Your appliance may be connected to a factory built or masonry chimney. If you are using a factory built chimney, it must comply with ULCS629 (Canada) or UL103 (USA) standards. It must therefore be a 6" (152mm) HT Type (2100°F) chimney. It is extremely important that it be installed according to the manufacturer’s specifications. The manufacturer’s installation instructions and specified clearances should always be followed in accordance with local and national codes. In Canada the CSA B365 and the CSA C22.1 installation codes are to be followed. In the USA the ANSI NFPA 70 and ANSI NFPA 211 installation codes are to be followed.

Chimney and chimney connector must be in good condition and kept clean.

installation

3.1.1 chimney connection

Your chimney connector and chimney must have the same diameter as the appliance's exhaust flue outlet. The appliance pipe must be made of aluminized or cold roll steel with a minimum 24 gauge (0.6mm) thickness. It is strictly forbidden to use galvanized steel.

A 6" (152.4mm) diameter single or double wall chimney connector, used to connect the appliance to the chimney, must be installed with the crimped end toward the appliance. This will ensure that the moisture which condenses from the burning wood will flow back into the fire chamber. Each joint in the chimney connector must be secured with at least three sheet metal screws, equally spaced around the circumference.

For installation of your chimney connector, the following recommendations may be useful.

- The chimney connector must be short and straight. For optimum performance, it is recommended that all horizontal runs have a minimum 1/4" (6.4mm) rise per foot (0.3m), with the higher end of the section toward the chimney. For safe and proper operation of the appliance, see "INSTALLATION" instructions.
- To ensure a good draft, the total horizontal length of the connector should never exceed 8' (2.4m) to 10' (3.1m). In the case of vertical installation, the total length of the connector can be longer and connected without problem to the chimney at the ceiling level.
- There should never be more than two 90° elbows in the entire connector and chimney system. Never start with a 90° elbow. Always go up vertically for at least 2 feet (0.6m) from the flue collar before using a 90° elbow.
- The connector must not pass through any combustible material, nor may it pass through a concealed space (such as an attic, roof space, or closet). If passing through a wall, ceiling or into a masonry chimney, use either chimney components listed for that specific use, or means acceptable to local authorities having jurisdiction over the installation.

This appliance must be connected to:

A. A chimney complying with the requirements for Type HT chimneys in the Standard for Chimneys, Factory-Built, Residential Type and Building Heating Appliance, or

B. A code-approved masonry chimney with a flue liner. Vent the stove into a masonry chimney or an approved, insulated solid-fuel stainless-steel chimney with as short and straight a length of 6" (152.4mm) diameter chimney connector as possible. Connection to a masonry thimble cemented in place.

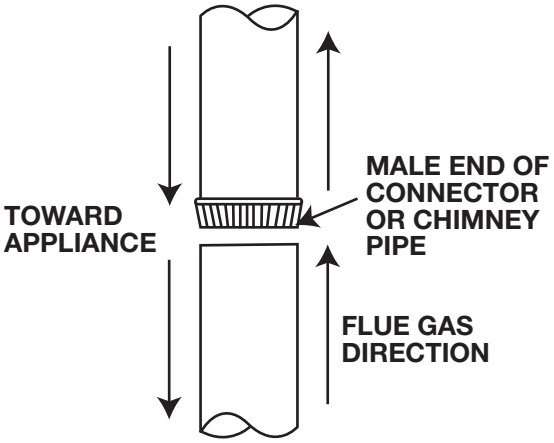

3.1.2 adding sections

Add chimney sections, according to the manufacturers installation instructions. If the chimney system passes through an attic space a rafter radiation shield or attic insulation shield is required. The chimney must extend at least 3ft (0.9m) above its point of contact with the roof and at least 2ft (0.6m) higher than any wall, roof or building within 10ft (3.1m). If the chimney extends more than 5ft (1.5m) above the roof, it must be secured using a roof brace or guide wires. A raincap must be installed to avoid internal damage and corrosion.

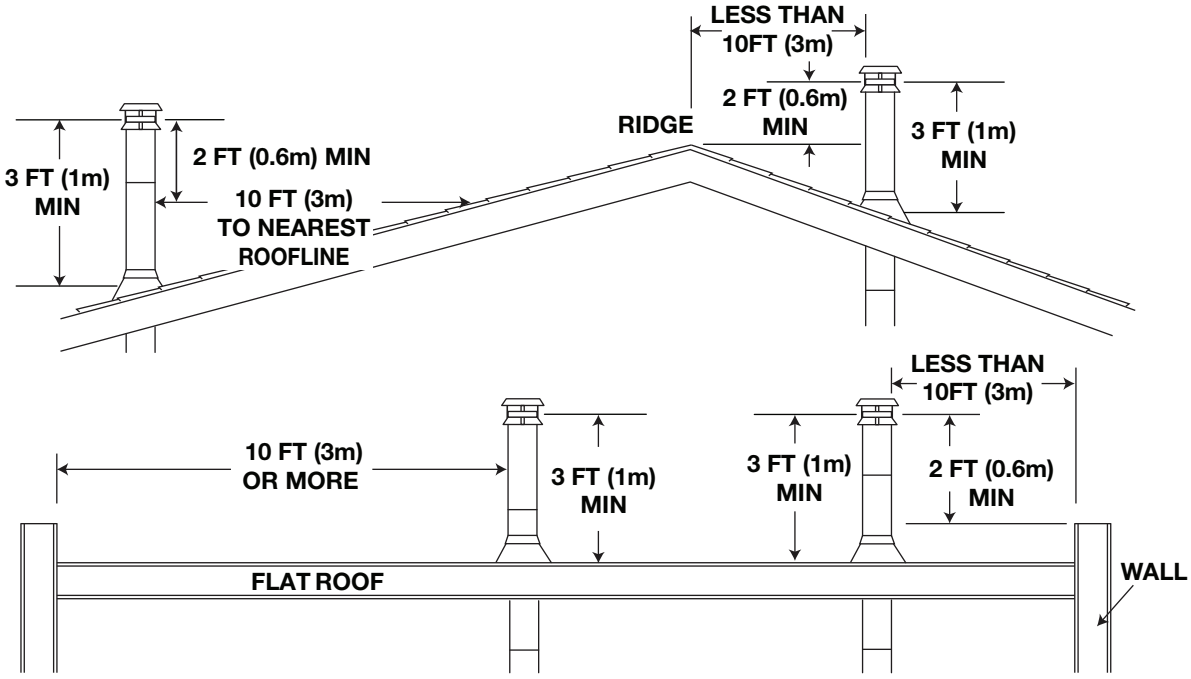

note:
This illustration is for wood appliances only.

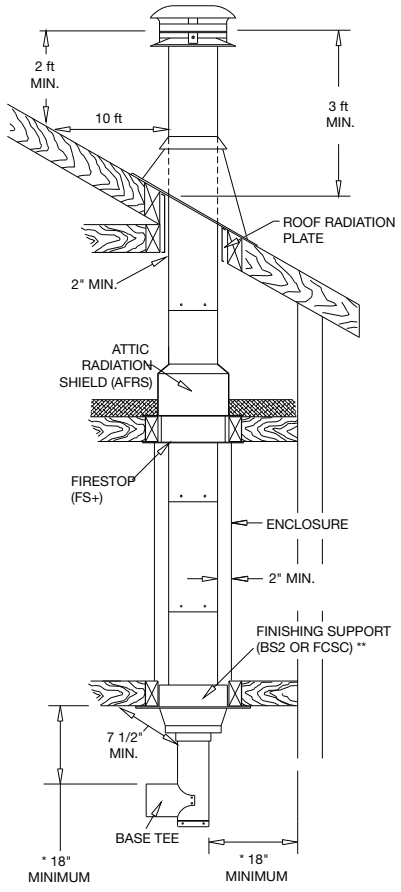

An insulated stainless steel chimney must be supported at the ceiling or roof and its installation must comply with its manufacturer's instructions.

* CLEARANCE CAN BE REDUCED IF A LISTED CHIMNEY CONNECTOR IS USED.
** CLEARANCES CAN BE LESS THAN 2" WHERE ESTABLISHED BY THE SUPPORT.

3.1.3 typical through the ceiling

A. Move the stove into position with the flue centered, midpoint between two joists to prevent having to cut them. Use a plumb bob to line up the center.

B. Cut and frame an opening in the ceiling to provide a 2” (50.8mm) clearance between the outside of the chimney and any combustible material. **Do not fill this space with any type of material.** Nail headers between the joist for extra support. Firestop spacers must be placed on the bottom of each framed opening in any floor or ceiling that the chimney passes through. If your chimney system is enclosed within the attic area, a rafter radiation shield is required.

C. Hold a plumb bob from the underside of the roof to determine where the opening in the roof should be. Cut and frame the roof opening to maintain proper 2” (50.8mm) clearances.

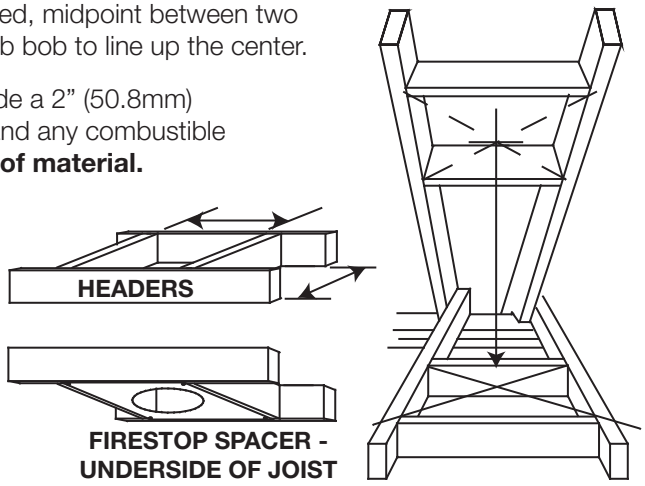

note:

The chimney must be supported at the ceiling or roof so that its weight does not rest on the appliance and must comply with its manufacturer’s instructions.

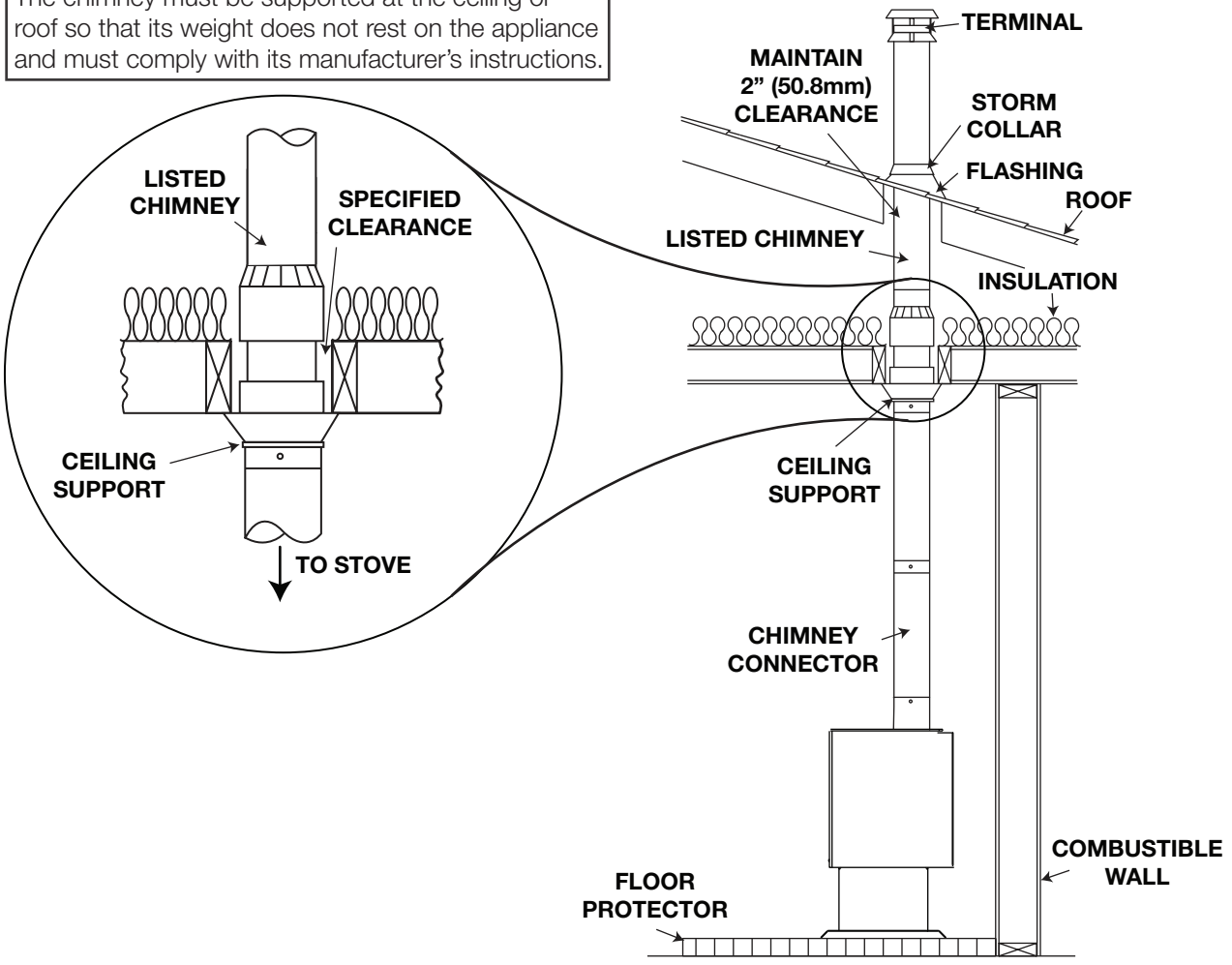

3.1.4 typical through the wall

If possible, design the installation so that the connector does not pass through a combustible wall. If during your installation you must pass through a combustible wall, check with your building inspector before you begin. Also check with the chimney connector manufacturer for any specific requirements.

Consult with your dealer regarding special connection components available for use for wall pass-throughs. Use only parts that have been tested and listed for use in a wall pass-through.

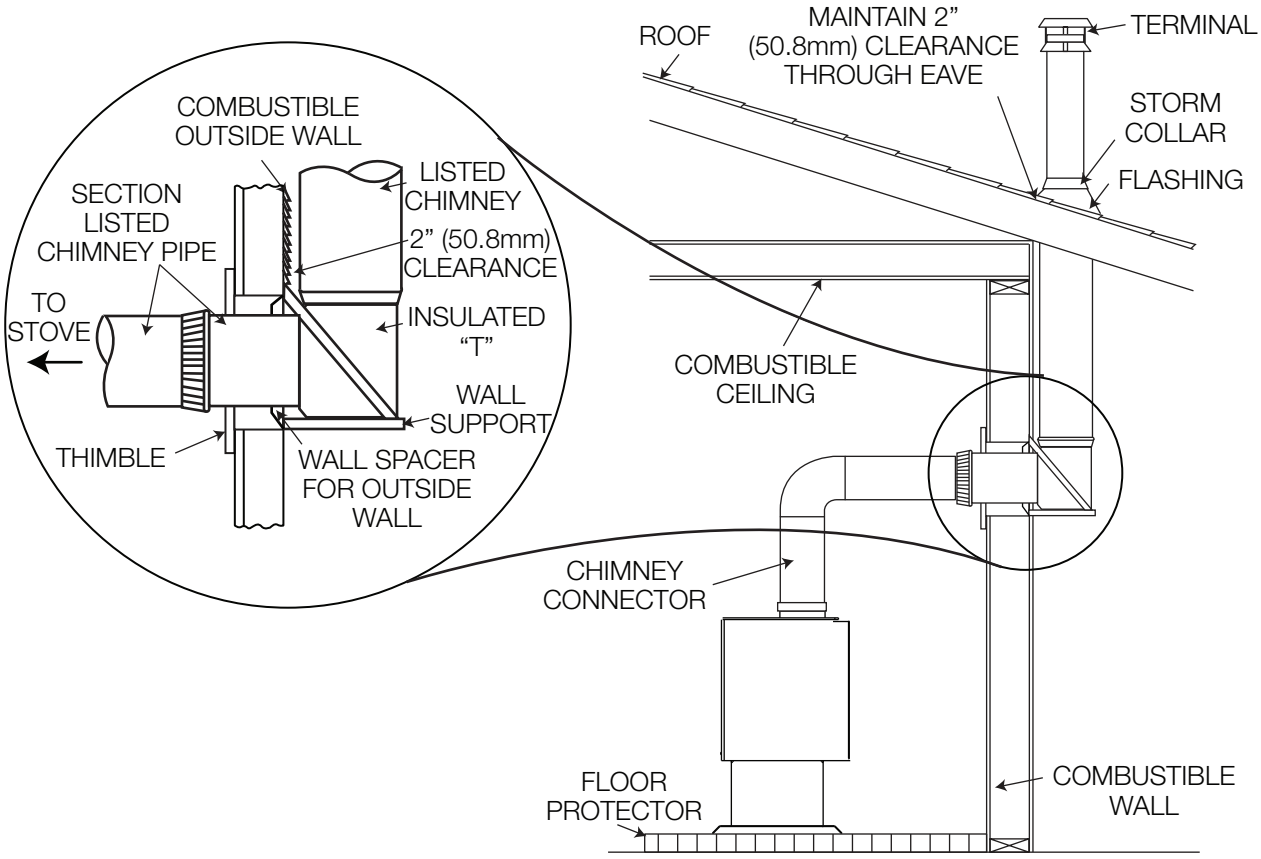

3.1.5 typical existing masonry

You can also install your appliance using your existing masonry chimney. To do so, use the following guidelines. Use a factory-built thimble, or construct your own brick thimble. If you are using a masonry chimney, it is important that it be built in compliance with the specifications of the Building Code in your region. It must normally be lined with fire clay bricks, metal or clay tiles sealed together with fire cement. (Round flues are the most efficient). The maximum flue size is 8” (203.2mm) x 8” (203.2mm) square or 6” (152.4mm) round. For greater diameters it is necessary to install a 6” (152.4mm) stainless steel liner.

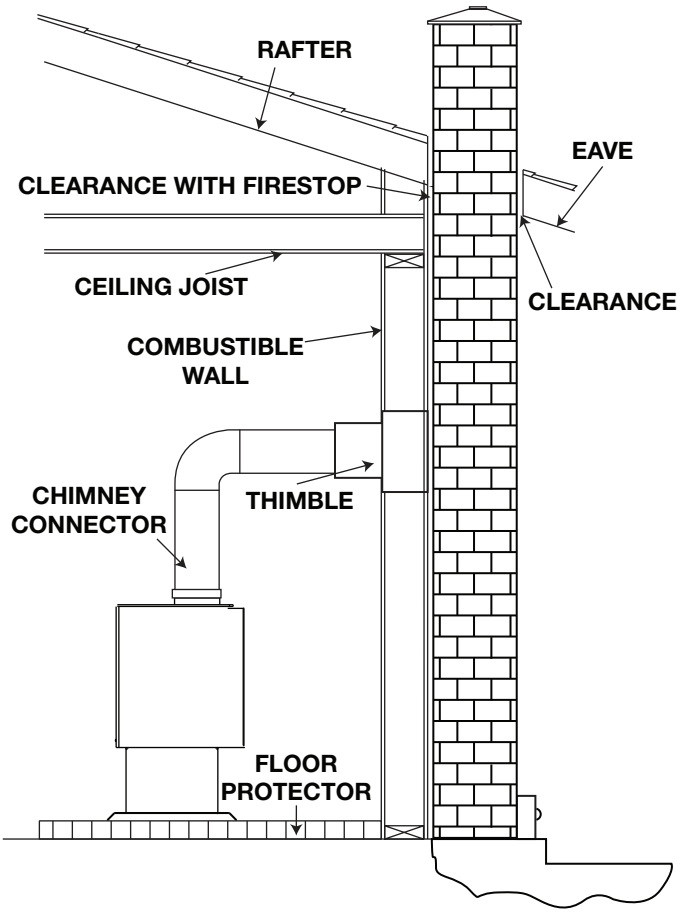

4.1 leg installation

⚠ WARNING

- Do **not** remove knockout unless installing the optional ash drawer kit.

To avoid being damaged during shipping, the appliance has been bolted to the pallet and must be unbolted before the appliance can be installed.

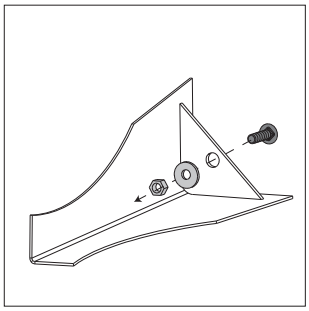

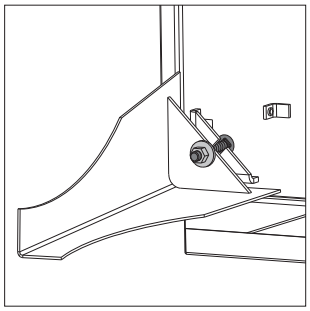

note:

If installing the optional ash drawer, see “optional ash drawer kit (EP20LAD)” section prior to heat shield and leg installation. Legs may need to be adjusted in order to properly align with the heat shield holes.

A. With the bolt through the legs, feed the washer and lock washer onto the bolt. Thread the nut a thread or two onto the bolt and slide the leg onto the slot on appliance as illustrated.

note:

Bolts must be tight prior to heat shield installation.

B. Slide the heat shield over the four bolts. Finally, secure the heat shield in place using the remaining nuts.

C. Lift the appliance up and gently set down on all four legs. Do not pivot appliance up on its legs, as this could result in damage to the legs.

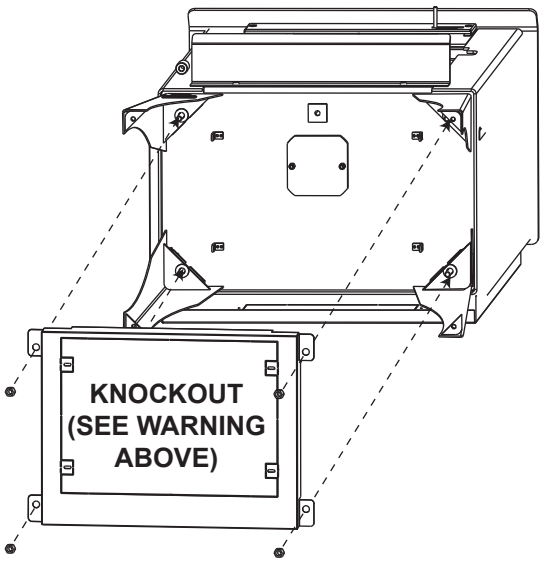

For additional logo placement locations, see “OPTIONAL ASH DRAWER” section.

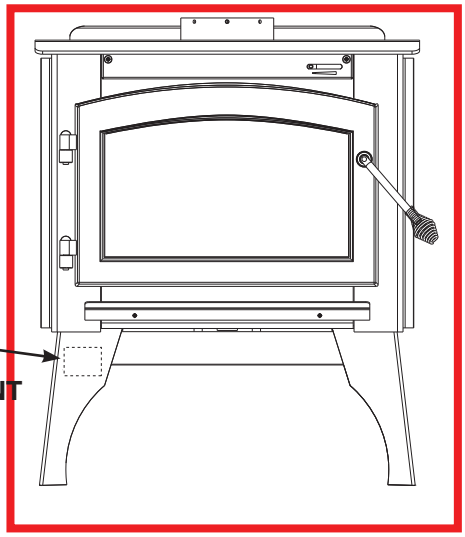

finishing

4.2 pedestal installation

note:

If an optional ash drawer kit is to be installed, ensure open side of pedestal is at the front of the appliance. If not, opening should be at the back.

To avoid being damaged during shipping, the appliance has been bolted to the pallet and must be unbolted before the appliance can be installed.

A. Using the machine screws supplied, secure the pedestal to the four brackets on the bottom of the firebox.

B. Lift the appliance up and gently set down on pedestal. Do not pivot appliance up as it could result in damage to the pedestal.

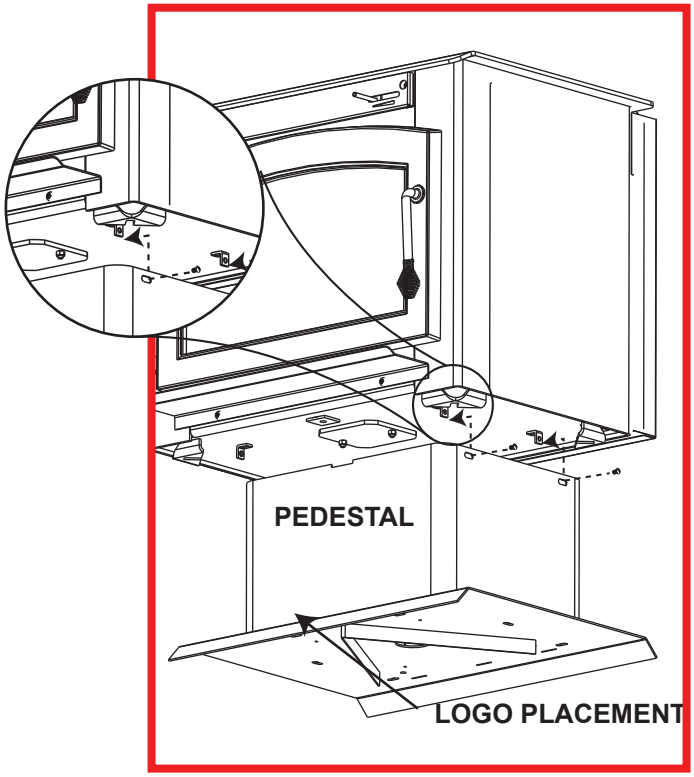

4.3 door removal

⚠ WARNING

- Burning your appliance in with the doors open or ajar creates a fire hazard that may result in a house and/or chimney fire.
- Do not strike or slam door.
- Never remove the door when the appliance is hot.

Pivot the door open and lift the door and pins off the bushings. Set the door aside being careful not to scratch the paint.

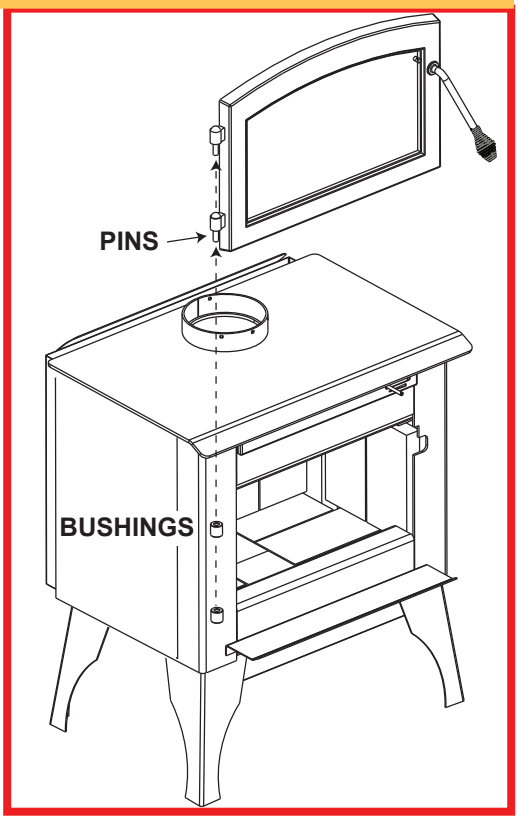

4.4 door handle installation

⚠ WARNING

- Burning your appliance in with the doors open or ajar creates a fire hazard that may result in a house and/or chimney fire.
- Do not strike or slam door.
- Never remove the door when the appliance is hot.

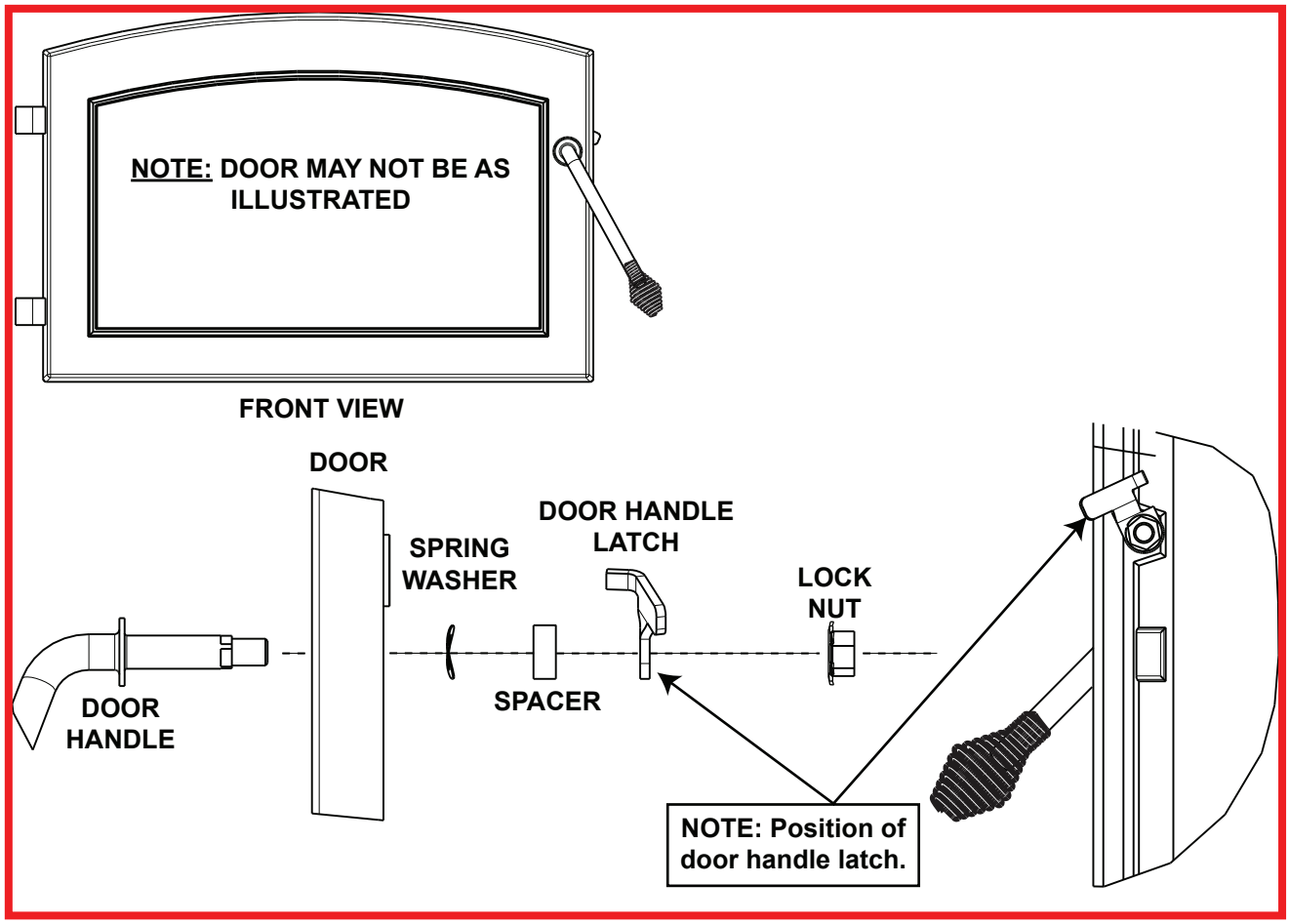

Twist the large wire handle over the end of the handle rod. Twist the smaller wire handle over the end of the air damper rod below the door.

finishing

4.5 secondary air tubes

1. Start at the back working forwards by sliding the secondary air tube in the firebox and inserting the tube into the hole, as illustrated in “1”.
2. Slide the tube into the opposite hole. With the holes on the secondary air tube pointing forward, align the tube with the tube retainer and insert the cotter pin, as illustrated in “2”.
3. Spread the cotter pin to retain.

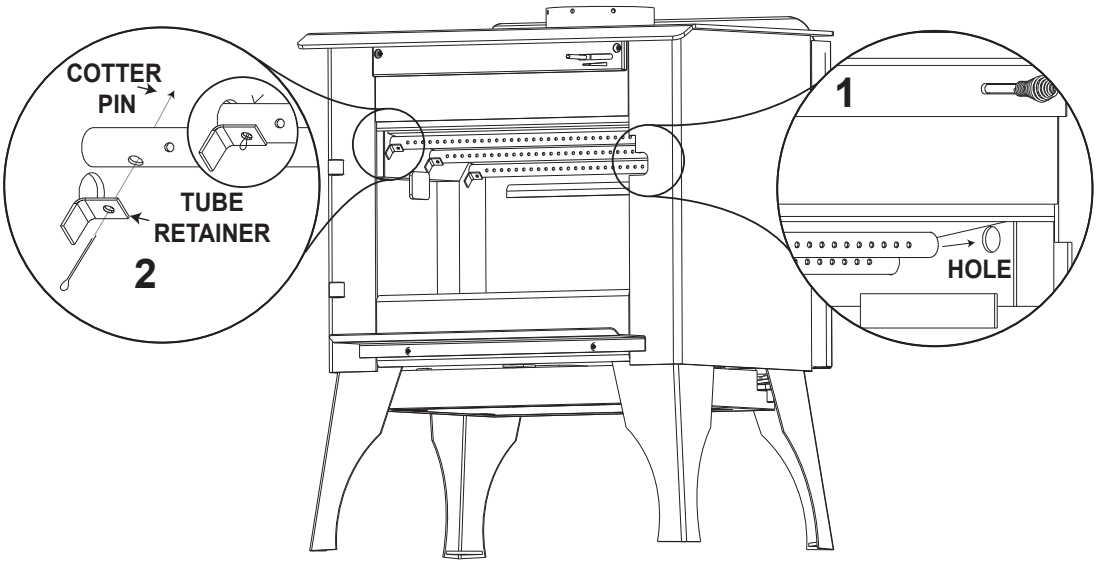

4.6 brick and baffle installation

⚠ WARNING

- Operation of the appliance without the baffles can result in excessive temperatures that could damage the appliance, chimney and the surrounding enclosure.

With the appliance and chimney installation completed, move the bricks into place as illustrated below.

A. Install the four (A) bricks, two (B) bricks and two (C) bricks, working from the back of the appliance forward as illustrated **(Fig. 1)**.

note:
Left and right rear bricks have been cut.

B. Install two (A) bricks along both sides of the appliance. Install the four (A) bricks and one (G) brick along the back wall by pivoting the bricks up under the brick retainer **(Fig. 1)**.

note:
Place narrow brick in center.

C. Carefully pivot fibre baffles (F) up onto the secondary air tubes **(Fig. 2)**. Ensure that the top baffles are pushed all the way to the rear of the firebox, leaving a minimum of a 1 inch gap along the front. This will allow the flue gases to escape the firebox. Ensure overlap joint is tight **(Fig. 2)**.

D. Install the two (D) bricks along the front **(Fig. 1)**.

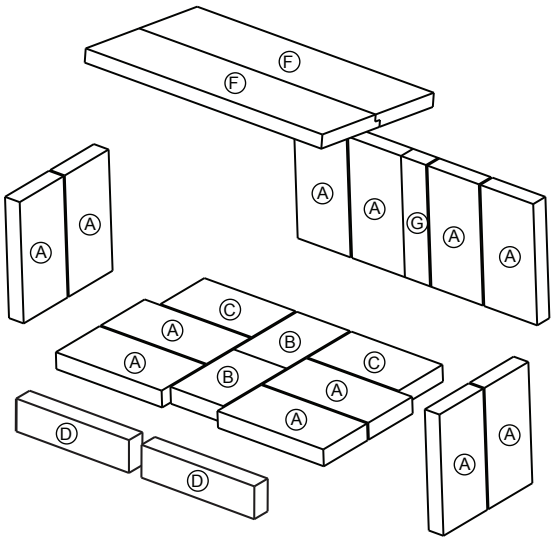

Fig. 1

note:
The fibre baffles are shipped in a box inside the firebox and must be removed from all special packaging prior to installation.

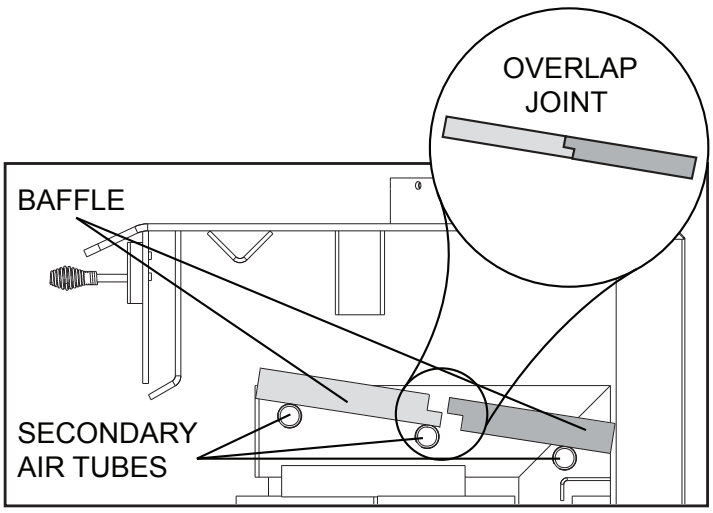

Fig. 2

finishing

4.7 ash lip installation

To avoid damage during transport, the ash lip has been shipped in the firebox. Using the two screws that secured the appliance to the shipping bracket, attach the ash lip as illustrated.

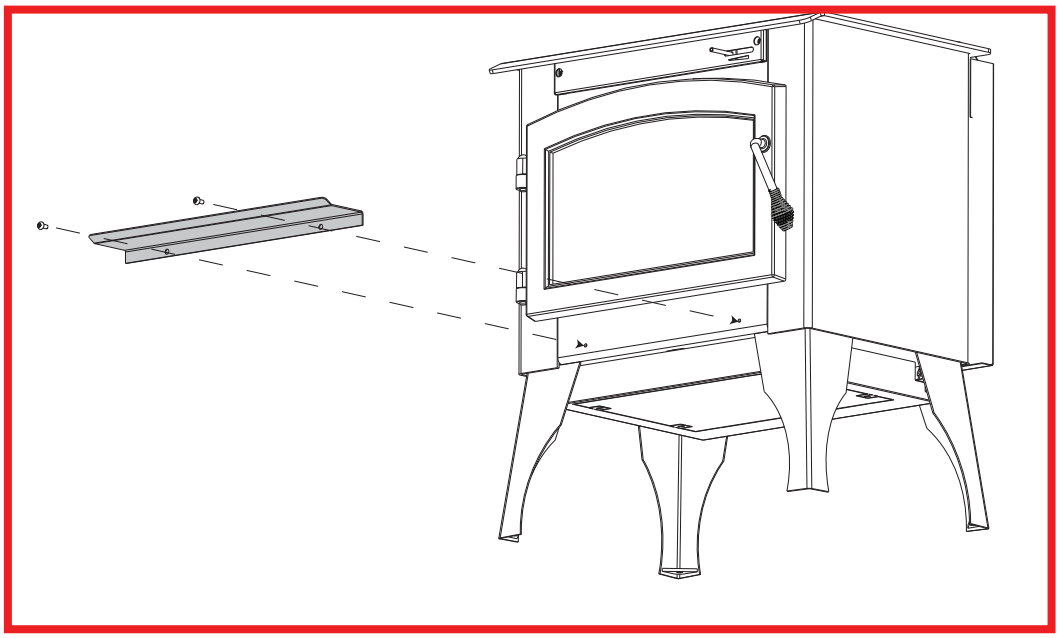

5.1 blower kit installation

⚠ WARNING

- Risk of fire and electrical shock!
- Turn off the gas and electrical power before servicing this appliance.
- Use only Wolf Steel approved optional accessories and replacement parts with this appliance. Using non-listed accessories (blowers, doors, louvres, trims, gas components, venting components, etc.) could result in a safety hazard and will void the warranty and certification.
- Ensure that the fan's power cord is not in contact with any surface of the appliance to prevent electrical shock or fire damage. Do not run the power cord beneath the appliance.
- The wire harness provided in the blower kit is a universal harness. When installed, ensure that any excess wire is contained, prevent it from making contact with moving or hot objects.

Drywall dust will penetrate into the blower bearings, causing irreparable damage. Care must be taken to prevent drywall dust from coming into contact with the blower or its compartment. Any damage resulting from this condition is not covered by the warranty policy. Use of the blower increases the output of heat.

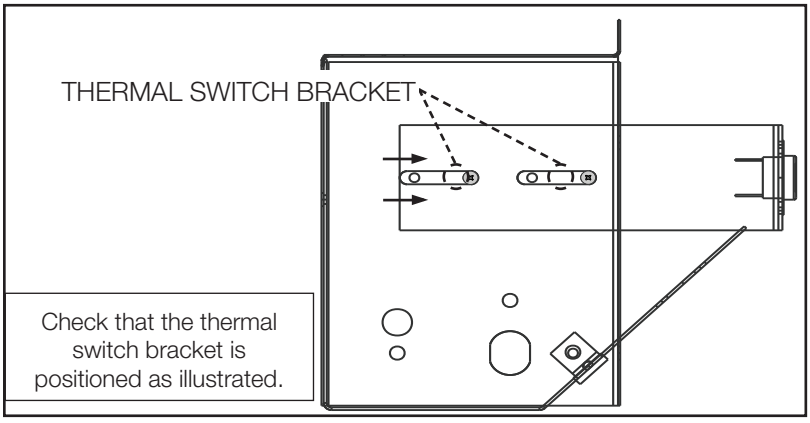

Provisions have been made on this appliance to install an optional blower kit (EPT70) that comes complete with a variable speed switch to turn the blower ON/OFF, as well as adjusting the blower speed.

A. Ensure the thermal disc bracket is in the correct position.

B. Remove the knock-out from the back of the appliance.

C. Install the blower and housing as shown using the 4 screws supplied.

D. Loosen the thermal disc bracket (2 screws) and slide the bracket until the thermal disc is touching the rear of the firebox and secure.

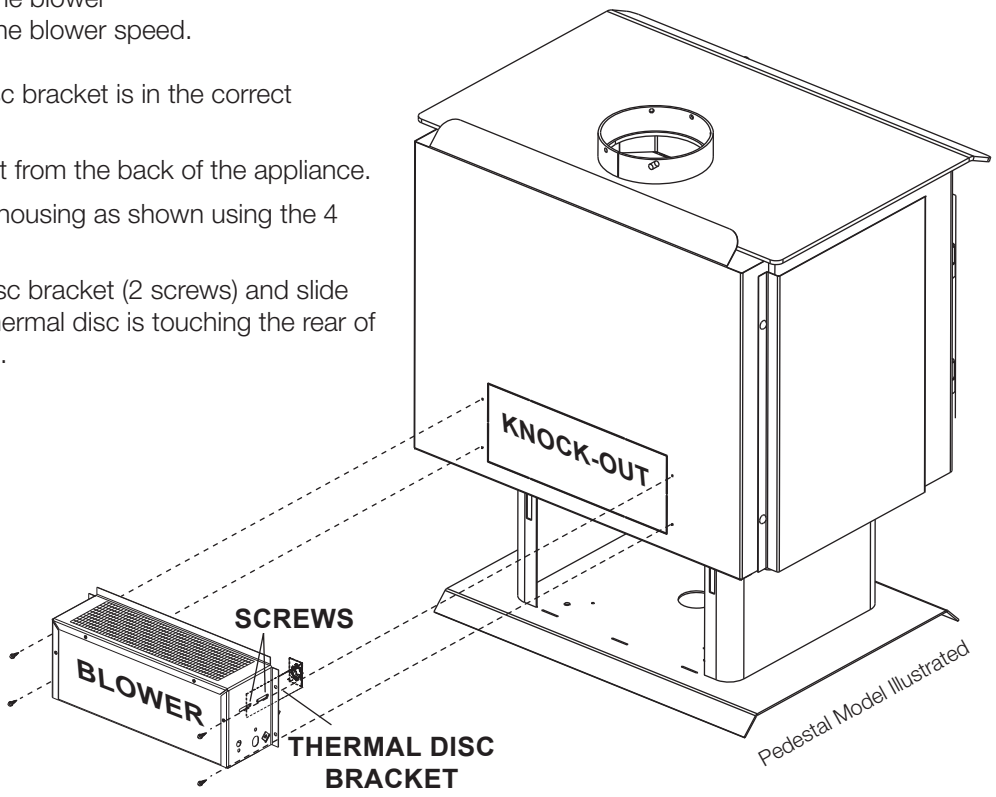

optional installation

5.2 ash drawer kit (EP20LAD)

⚠ WARNING

- Failure to achieve a good seal between the ash opening and ash plug will result in an over-fire condition that could cause damage to the appliance.

Provisions have been made on the appliance to install an optional ash drawer kit. The kit allows for convenient removal of excess ash.

1. If the appliance has been previously operated, the appliance must be cold and the ashes must be removed in order to access the ash plug.

note:

Place the ash drawer from the kit underneath the appliance to catch falling ashes during the installation.

2. From the underside of the appliance, remove the nuts that secures the heat shield and the ash opening cover plate.
3. Remove the small light weight brick that is covering the ash opening, and discard. It is important that the area around the ash opening be cleaned well to ensure that a proper seal is created between the new ash plug and the ash opening.
4. Once the area surrounding the opening has been cleaned, place the new ash plug (supplied) over the opening.
5. Carefully remove the knock out from the heat shield by breaking the micro tabs.
6. Bend out the four bend tabs at a 90 ° angle from the heat shield.
7. Align the slots in the ash drawer housing with the four bend tabs. Secure using the four screws supplied.
8. Secure the heat shield and ash drawer housing to the appliance using the nuts removed in step 2.
9. Slide the ash drawer into the ash housing.

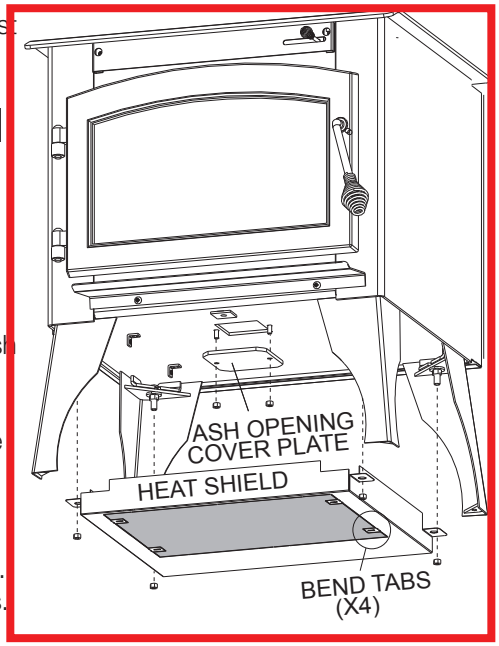

5.3 ash pan kit (EP20PAD)

⚠ WARNING

- Failure to achieve a good seal between the ash opening and ash plug will result in an over-fire condition that could cause damage to the appliance.

Provisions have been made on the appliance to install an optional ash drawer kit. The kit allows for convenient removal of excess ash.

note:

It is recommended to install the rails on the pedestal base prior to installing the pedestal assembly to the firebox.

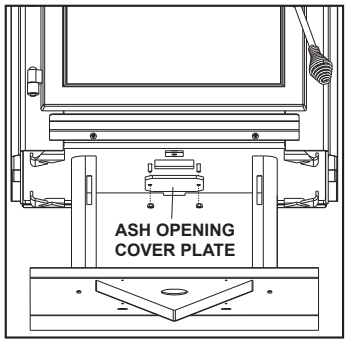

1. If the appliance has been previously operated, it must be cold and the ashes must be removed in order to access the ash plug.
2. If the pedestal has been installed with the opening to the back, it will be necessary to lay the appliance onto its back, remove the pedestal and re-install it with the opening to the front. It is recommended all fire brick, including baffles, be removed prior to placing the appliance on its back.
3. From the underside of the appliance, remove the nuts that secure the ash opening cover plate.
4. Install the ash pan rails using the screws provided.
5. Snap the magnets into place.
6. Slide the ash drawer into the ash housing.
7. Install the handle using the screws provided and affix the logo to the ash pan housing cover as illustrated.
8. Place the ash pan housing cover in front of the opening, engaging it into the slots.
9. Remove the small light weight brick that was covering the ash opening and discard. It is important that the area around the ash opening be cleaned well to ensure that a proper seal is created between the new ash plug and the ash opening.
10. Once the area surrounding the opening has been cleaned, place the new ash plug (supplied) over the opening, allowing the protrusion on the brick to recess into the opening on the bottom of the firebox.

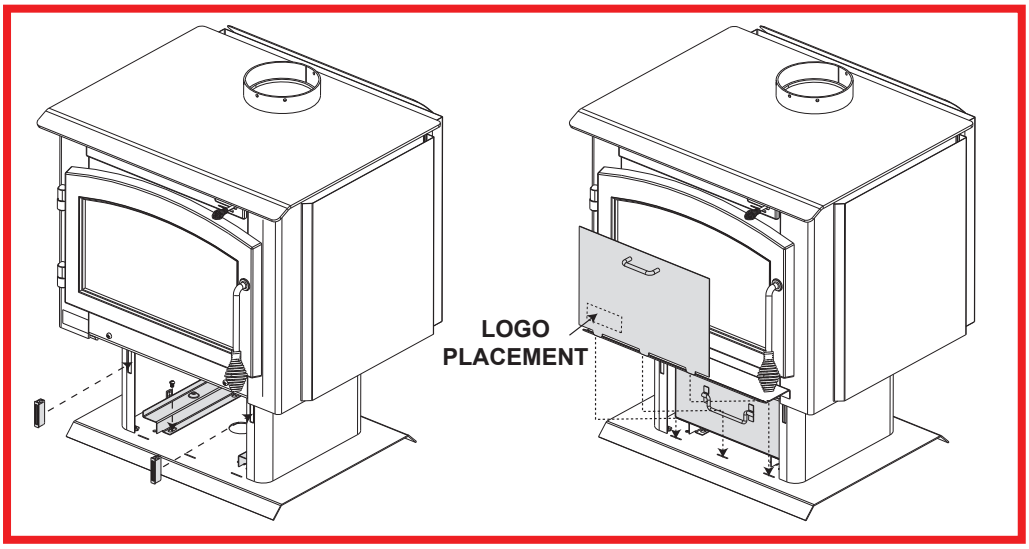

6.0 operation

⚠ WARNING

- Always operate this appliance with the door closed and latched except during startup and re-fueling. Always wear gloves to prevent injury. Do not leave the fire unattended when the door is unlatched as unstable wood could fall out of the fire chamber creating a fire hazard to your home.
- Never leave your children unattended when there is a fire burning in the appliance.
- Never use gasoline, gasoline-type lantern fuel, kerosene, charcoal lighter fluid, or similar liquids to start or 'freshen up' a fire in this appliance. Keep all such liquids well away from the appliance while it is in use.
- Objects placed in front of the appliance should be kept a minimum of 48" (121.9cm) from the front face.
- Any modification of the appliance that has not been approved in writing by the testing authority is considered breaching CSA B365 (Canada) and ANSI/NFPA 211 (USA).
- Open air control (and damper when fitted) before opening firing door.
- Hot while in operation. Keep children, clothing and furniture away. Contact may cause skin burns. Wear gloves to operate your appliance.
- Burning your appliance with the doors open or ajar creates a fire hazard that may result in a house and/or chimney fire.
- This wood appliance has a manufacturer-set minimum low burn rate that must not be altered. It is against federal regulations in the United States to alter this setting or otherwise operate this wood appliance in a manner inconsistent with operating instructions in this manual.

Your Timberwolf EPA listed product is a Hi-tech appliance, designed with the most advanced technology. The appliance is extremely airtight.

The first fire(s) in your appliance will be difficult to get going and keep going with little amount of heat being generated. This is a result of the moisture being driven out of the fire brick. During the break-in period (the first 2 or 3 fires) create only small, fires using kindling; this will allow the firebrick to cure. Do not be alarmed if small hairline cracks develop in the firebrick. This is a normal occurrence and does not pose a safety hazard. The paint may also smell a little for the first few fires as it cures and you may wish to open a door or window to alleviate the smell.

To start, a brisk fire is required. Place loosely crumpled paper on the floor of the appliance and cover with dry kindling. Open the air control fully by sliding control all the way to the right. Light the paper and leave the door slightly ajar (1"/25.4mm) until all kindling is burning. To maintain a brisk fire, a hot coal bed must be established and sustained.

Slowly add larger wood (2x4 size pieces). Lay the pieces lengthwise from side to side in the hot coal bed with a shallow trench between, so that the primary air can flow directly into this trench and ignite the fuel above. When the fire seems to be at its peak, medium sized logs may be added. Once these logs have caught fire, carefully close the door. (Closing the door too quickly after refueling will reduce the firebox temperature and result in an unsatisfactory burn.) Remember it is more efficient to burn medium sized wood, briskly, and refuel frequently than to load the appliance with large logs that result in a smouldering, inefficient fire and dirty glass.

As soon as the door is closed, you will observe a change in the flame pattern. The flames will get smaller and lazier because less oxygen is getting into the combustion chamber. The flames, however, are more efficient. The flames will remain lazy but become larger again as soon as the firebricks have been heated thoroughly and the chimney becomes heated and provides a good draft. At this point, the roaring fire that you see when the door is opened is wastefully drawing heated room air up the chimney, certainly not desirable. Always operate with the door fully closed once the medium sized logs have caught fire.

You can now add larger pieces of wood and operate the appliance normally. Once the appliance is entirely hot, it will burn very efficiently with little smoke from the chimney. There will be a bed of orange coals in the firebox and secondary flames flickering just below the top baffles. You can safely fill the firebox with wood to the top of the door and will get best burns if you keep the appliance pipe temperatures between 250°F (120°C) and 450°F (270°C). A surface thermometer will help regulate this.

Without an appliance thermometer, you are working blindly and have no idea of how the appliance is operating! An appliance thermometer offers a guide to performance and should be located 18" (457mm) above the flue collar. Install the thermometer according to manufacturers instructions.

Can't get the fire going?
Use more kindling and paper. Assuming the chimney and vent are sized correctly and there is sufficient combustion air, the lack of sufficiently dry quantities of small kindling is the problem. Thumb size is a good gauge for small kindling diameter.

Can't get heat out of the appliance?
One of two things may have happened. The appliance door may have been closed prematurely and the appliance itself has not reached optimum temperature. Re-open the door and/or draft control to re-establish a brisk fire. The other problem may have been wet wood. The typical symptom is sizzling wood and moisture being driven from the wood.

6.1 optimum burn method

For optimal emissions performance and efficiency follow these simple guidelines when using your appliance:

A. Maintain a 2" (51mm) deep, hot, glowing red coal bed.

B. Burn dry seasoned wood with less than 20% moisture content and burn so that the glass door remains clean.

C. A stove thermometer 18" (457mm) up on the single wall stove pipe should indicate 350°F (176°C) as an average temperature.

D. Maintain a minimal trace of smoke coming from the chimney when the appliance is burning as intended.

E. Inspect and replace all necessary components such as gaskets, manifolds, glass and other components which may affect the overall appliance performance.

F. Ensure an adequate draft to control burn rate and temperature.

Refer to "OPERATION" and "MAINTENANCE" sections for detailed information.

6.2 air control

⚠ WARNING

- This wood appliance has a manufacturer-set minimum low burn rate that must not be altered. It is against federal regulations in the United States to alter the setting or otherwise operate this wood appliance in a manner inconsistent with operating instructions in this manual.

Draft is the force which moves air from the firebox up through the chimney. The amount of draft in your chimney depends on the length and diameter of chimney, local geography, nearby obstructions and other factors including the amount of heat generated by the fire which can be measured by an appliance thermometer.

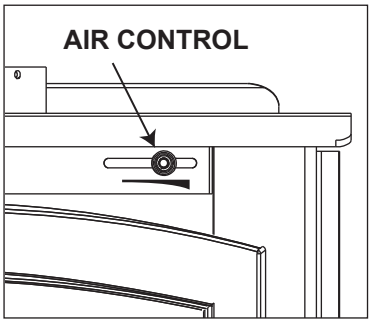

Adjusting the air control all the way to the left reduces the temperature. The draft can be adjusted from low to high by moving the handle from left to right.

Inadequate draft may cause back-puffing into the room through the appliance and chimney connector points and may cause plugging of the chimney. Too much draft may cause an excessive temperature in the appliance, glowing red appliance parts or chimney connectors or an uncontrollable burn which can lead to a chimney fire or permanent damage to the appliance.

Do not operate your appliance for longer than 30 minutes with the draft control on "HIGH" (fully open).

6.3 fire extinguishers / smoke & carbon monoxide detectors

note:

Always check your smoke and CO detectors are working properly.

All homes with a solid fuel burning appliance should have at least one fire extinguisher in a central location, known to all, at least one smoke detector and carbon monoxide (CO) detector in the room containing the appliance. If the smoke detector sounds an alarm, correct the cause but do not deactive or relocate the smoke detector. If the carbon monoxide detector sounds an alarm, immediately vent the area, evacuate and call your local fire department.

6.4 fuel

⚠ WARNING

- Do not store fuel within the clearance to combustibles, or in the space required for re-fueling and ash removal.
- Burning wet, unseasoned wood can cause excessive creasote accumulation. When ignited, it can cause a chimney fire that may result in a serious house fire.

When loading the appliance, ensure that the two upper fibre baffles are not lifted up and off their ledge. For maximum efficiency, when the appliance is thoroughly hot, load it fully to the top of the door opening and burn at a medium low setting. Maximum heat for minimum fuel (optimum burn) occurs when the appliance top temperature is between 500°F (260°C) and 600°F (315°C). The bricks will be nearly all white and the glass mostly clear. The whiteness of the bricks and the cleanliness of the glass are good indicators of your operating efficiency. Not enough heat is produced when only one or two pieces of wood are burned or the wood may not burn completely. A minimum of three pieces are needed to encase a bed of coals that sustains the fire.

note:

When loading the appliance, ensure to keep fuel back from the glass. If coals are to accumulate on the front lip, there is a chance they will fall out when the door is opened.

Loosely stacked wood burns quicker than a tightly packed load. Wood burns in cycles rather than giving a steady output of heat. It is best to plan these cycles around your household routine so that only enough coals are left to start the next load. In the evening, load your appliance, at least, a half-hour before bed to ensure a good fire, hot enough to close the draft control for an overnight burn.

Burn only dry seasoned wood with less than 20% moisture content. It produces more heat and less soot or creosote. Do not burn ocean beach wood. Its salt content can produce a metal-eating acid. When refueling open the door slowly to prevent smoke spillage. Use a pair of long gloves (barbecue gloves) when feeding the fire. Because these appliances burn at the front, they are clean and efficient, but they are also very hot and gloves are useful. Keep a small steel shovel nearby to use as a poker and to remove ashes. Do not store the wood within 3 feet (1m) of the appliance.

6.5 lighting a fire

6.5.1 flash fire

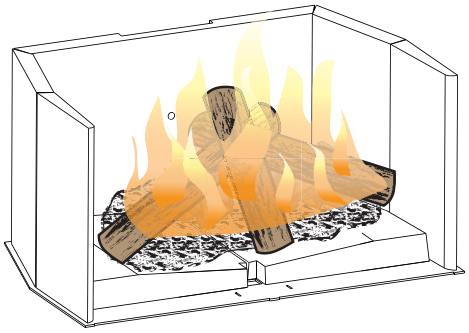

A flash fire is a small fire burned quickly when you don't need much heat. After your kindling has "caught", load at least 3 pieces of wood, stacked loosely. Burn with the draft control fully open or closed only slightly.

6.5.2 extended fire

Load your larger pieces of wood so they are tightly packed, close enough to prevent the flames from penetrating it completely. After approximately 30 minutes, depending on the size of the load, close the draft control completely making sure that the fire is not extinguished.

DO NOT OVERFIRE THE APPLIANCE!

Overfiring can occur by:

A. Burning large amounts of smaller wood pieces such as furniture scraps, skids or treated wood;

B. Vigorously burning large loads of wood with the draft control on “HIGH” (fully open) for long periods of time (one or two hours).

C. Operating the appliance with the ash dump door blocked open or a poor gasket seal on the main door.

6.6 smoking

A properly installed appliance should not smoke. If yours does, check the following:

- Has the chimney had time to get hot?
- Is the smoke passage blocked anywhere in the appliance, chimney connector or chimney?
- Is the room too airtight and the air intake not connected to the outside? Try with a window partly open.
- Is the smoke flow impeded by too long a horizontal pipe or too many bends?
- Is it a weak draft perhaps caused by a leaky chimney, a cold outside chimney, too large a diameter of a chimney, too short a chimney, or a chimney too close to trees or a higher roof?
- Is the moisture content of the wood greater than 20%?
- If equipped, has the catalyst bypass been closed or closed prematurely?

6.7 optional fan operation

The following operating procedure is recommended to achieve optimal performance:

When operating on high burn rate:

1. Set the fan to the “HIGH” setting and operate with a thermodisc (located at the back of the appliance).

When operating on medium burn rate:

2. Do not use.

When operating on low burn rate:

3. The fan can be turned on after 60 minutes at the minimum setting. Operate with a thermodisc (located at the back of the appliance).

7.0 maintenance

⚠ WARNING

- Turn off the power before servicing the appliance.
- Appliance may be hot, do not service until appliance has cooled.
- Do not use abrasive cleaners.

Check your chimney and chimney connector for creosote and soot buildup weekly until a safe frequency for cleaning is established.
If accumulation is excessive, disconnect the appliance and clean both the chimney and the appliance. You may want to call a professional chimney sweep to clean them. Both have to be cleaned at least once a year or as often as necessary.

Remove fibre baffles and clean above them once a year.
Replace any broken bricks.

7.1 ash removal procedures

⚠ WARNING

- Improper disposal of ashes result in fires. Do not discard ashes in cardboard boxes, dump in backyards, or store in garages.
- If using a vacuum to clean up ashes, be sure the ashes are entirely cooled. Using a vacuum to clean up warm ashes could cause a fire inside the vacuum.
- Never operate your appliance with the grate cover removed.
- Failure to achieve a good seal between the ash opening, ash plug or ash well door will result in an over-fire condition that could cause damage to the appliance.

Allow the ashes in your firebox to accumulate to a depth of two or three inches; they tend to burn themselves up. When the fire has burned down and cooled, remove any excess ashes but leave an ash bed approximately 1 inch (25mm) deep on the firebox bottom to help maintain a hot charcoal bed.

DISPOSAL OF ASHES: Ashes should be placed in a metal container with a tight fitting lid. The closed container of ashes should be placed on a non-combustible floor or ground, well away from all combustible materials, pending final disposal. If the ashes are disposed of by burial in soil or otherwise locally dispersed, they should be retained in the closed container until all cinders have thoroughly cooled.

7.1.1 ash removal with ash drawer

1. To remove the ashes, clear the ash away from the ash plug.
2. Remove the ash plug. **It is recommended to use a poker.**
3. Rake the excess ash into the ash drawer.
4. **Do not overfill the ash drawer. Ash should not accumulate higher than the sides of the drawer.**
5. Before removing the drawer, ensure that the area around the ash opening is clean. Tap the ash from the chute into the drawer, then place the ash plug back over opening. Only operate your appliance with a well sealed ash plug.

7.2 creosote formation and removal

When wood is burned slowly, it produces tar and other organic vapors, which combine with expelled moisture to form creosote. The creosote vapors condense in the relatively cooler chimney flue or a slow-burning fire. As a result, creosote residue accumulates on the flue lining. When ignited, this creosote makes an extremely hot fire.

The chimney connector and chimney should be inspected at least once every two months during the heating season to determine if a creosote buildup has occurred.

If creosote has accumulated, it should be removed to reduce the risk of a chimney fire.

7.3 runaway or chimney fire

⚠ WARNING

- A chimney fire can permanently damage your chimney system. This damage can only be repaired by replacing the damaged component parts. Chimney fires are not covered by the lifetime limited warranty.

CAUSES:

- Using incorrect fuel, or small fuel pieces which would normally be used as kindling.
- Creosote build up in chimney.
- Leaving the door ajar too long and creating extreme temperatures as the air rushes in the open door.
- If equipped, burning your appliance with the ash plug not securely seated.

SOLUTIONS:

- Do not burn treated, painted, artificial, paper or processed wood logs, coal, charcoal, coloured paper or cardboard.
- Have chimney regularly cleaned.
- Be careful not to over-fire the appliance by leaving the door open too long after initial start-up. A thermometer on the chimney connector and/or appliance top helps to indicate the appliance operating temperature.
- If equipped, always operate the appliance with the ash plug properly installed.

IN CASE OF A CHIMNEY FIRE:

- Close glass door and air control (and damper, when equipped).
- Have a well understood plan for evacuation and a place outside for everyone to meet. Prepare to evacuate to ensure everyone's safety.
- Call local fire department. Have a fire extinguisher handy. Contact local authorities for further information on how to handle a chimney fire.
- After the chimney fire is out, clean and inspect the chimney or chimney liner for stress and cracks prior to lighting another fire. Also check combustibles around the chimney and the roof.

7.4 chimney cleaning

Both the chimney and the appliance must be inspected and cleaned if necessary at least once a year.
For serious wood burners, chimney cleaning must be done as needed to avoid chimney fires; the venting systems for controlled combustion appliances may need cleaning as often as once a month. These rates, however, depend on the burning habits of the individual operating the appliance. For example, it is possible to clog a solid fuel appliance chimney in a few days if slow, smoldering fires are burned and the chimney is cold.

note:
Appliances burned consistently without hot fires may result in significant creosote accumulations in the chimney.

Certain items and considerations are important in chimney cleaning:

- Proper tools should be used, including a brush specifically designed for chimney cleaning.
- The chimney connector and dampers as well as the chimney should be cleaned.
- The appliance's firebox and baffle system should be cleaned if needed.
- The chimney should be inspected and repairs made if needed, preferably by a qualified chimney sweep or mason.

7.5 door glass replacement

⚠ WARNING

- Do not use substitute materials.
- Glass may be hot. Do not touch glass until cooled.
- Care must be taken when removing and disposing of any broken door glass or damaged components. Be sure to vacuum up any broken glass from inside appliance before operation.
- Do not strike, slam, or scratch. Do not operate appliance with glass removed, cracked, broken, or scratched.

Replacement glass/frame assembly shall be replaced as a complete unit as supplied by the appliance manufacturer.

note:

Care must be taken when removing and disposing of any broken glass or damaged components. Be sure to vacuum up any broken glass from inside the appliance before operation.

7.6 gasket replacement

At the end of each burning season inspect the shield and gasket below the manifold for warping or deterioration. Replace if necessary. Both are held to the manifold with machine screws. The shield and the 1/8" (3.2mm) fibre cloth gasket are available from your Wolf Steel Ltd. dealer. At this time also check that the door gasket is not worn or loose. Replace with 3/8" (9.5mm) high density fibreglass rope if necessary.

The airwash gasket and shield above the door should also be inspected and replaced if deteriorated

note:

Do not operate the appliance if the manifold shield or fibre baffle is deteriorated or missing.

7.7 care of glass

⚠ WARNING

- Do not clean glass when hot! Do not use abrasive cleaners to clean glass.

If the glass is not kept clean, permanent discolouration and/or blemishes may result. Normally a hot fire will clean the glass. The most common reasons for dirty glass include:

- Not using sufficient fuel to get the appliance thoroughly hot.
- Using green or wet wood.
- Closing the draft so far that there is insufficient air for complete combustion.



If it is necessary to clean the glass, buff lightly with a clean dry cloth and non-abrasive cleaner. Clean the glass after the first 10 hours of operation with a recommended appliance glass cleaner. Thereafter, clean as required.

The glass is very strong, but do not let burning fuel rest or fall against it and always close the door gently.

NEVER FORCE OR SLAM IT SHUT!

Do not operate the appliance with broken glass, as leakage of flue gases may result.

Contact your local authorized dealer/distributor for complete cleaning instructions.

If the glass should ever crack or break while the fire is burning, do not open the door until the fire is out. Do not operate the appliance until the glass has been replaced. Contact your local authorized dealer/distributor for replacement parts. **DO NOT SUBSTITUTE MATERIALS.**

7.8 wood

⚠ WARNING

- This appliance is designed to burn natural wood only. Do not burn treated wood, coal, charcoal, coloured paper, cardboard, solvents or garbage. This appliance has not been tested with an unvented gas log set. To reduce risk of fire or injury, do not install an unvented gas log set into the appliance.
- Higher efficiencies and lower emissions generally result when burning air dried seasoned hardwoods, as compared to softwoods or too green or freshly cut hardwoods.
- Burning wet, unseasoned wood can cause excessive creostore accumulation. When ignited, it can cause a chimney fire that may result in a serious house fire.
- Do not store fuel within the clearance to combustibles, or in the space required for re-fueling and ash removal.

Before loading the appliance, ensure all required insulation and baffles are installed and situated properly. For maximum efficiency, when the appliance is thoroughly hot, load it fully to the specified maximum amount and burn at a medium low setting (if equipped). The whiteness of the bricks and the cleanliness of the glass are good indicators of your operating efficiency. Not enough heat is produced when only a few pieces of wood are burned or the wood may not burn completely.

NOTE: When loading the appliance, ensure to keep fuel back from the glass. If coals are to accumulate on the front lip, there is a chance they will fall out when the door is opened.

TYPES OF WOOD

Both hardwood and softwood burn equally well in this appliance but hardwood is denser, will weigh more per cord and burn a little slower and longer.

Manufactured firelogs made by compressing 100% natural wood fibre can be safely used as fuel. Do not use manufactured firelogs if they contain additives such as paraffin, wax, binders etc. Never burn more than two manufactured firelogs at a time.

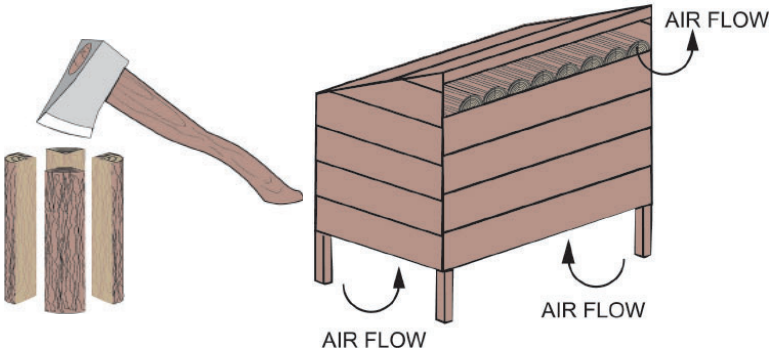

MOISTURE CONTENT

Burn only dry, clean unpainted wood that has been seasoned. It produces more heat and less soot or creosote. Freshly cut wood contains about 50% moisture while after proper seasoning only about 20% of the water remains. As wood is burned, this water boils off consuming energy that should be used in heating. The wetter the wood, the less heat is given off and the more creosote is produced. Dry firewood has cracks in the end of the grain.

STORING WOOD

Firewood should be split and stacked in a manner that allows for full air circulation and covered in early spring to be ready for burning that fall. Dry firewood has cracks in the end grain.

Cut the wood so that it will fit horizontally, front to back, making for easier loading and less of a likelihood that the wood will roll onto the glass.

Fuel for the appliance must not be stored closer than the required clearances to combustibles (heat sensitive material). **NEVER STORE WOOD IN THE ASH PAN COMPARTMENT (if applicable).**

8.0 replacement parts

⚠ WARNING

- Failure to position the parts in accordance with this manual or failure to use only parts specifically approved with this appliance may result in property damage or personal injury.

Contact your dealer for questions concerning prices and policies on replacement parts. Normally, all parts can be ordered through your Authorized dealer / distributor.

For warranty replacement parts, a photocopy of the original invoice will be required to honour the claim.

When ordering replacement parts always give the following information:

- Model & Serial Number of appliance
- Installation date of appliance
- Part number
- Description of part
- Finish

Parts, part numbers, and availability are subject to change without notice.

Parts identified as stocked will be delivered within 2 to 5 business days for most delivery destinations.

Parts not identified as stocked will be delivered within a 2 to 4 week period, for most cases.

Parts identified as 'SO' are special order and can take up to 90 days for delivery.

8.1 overview

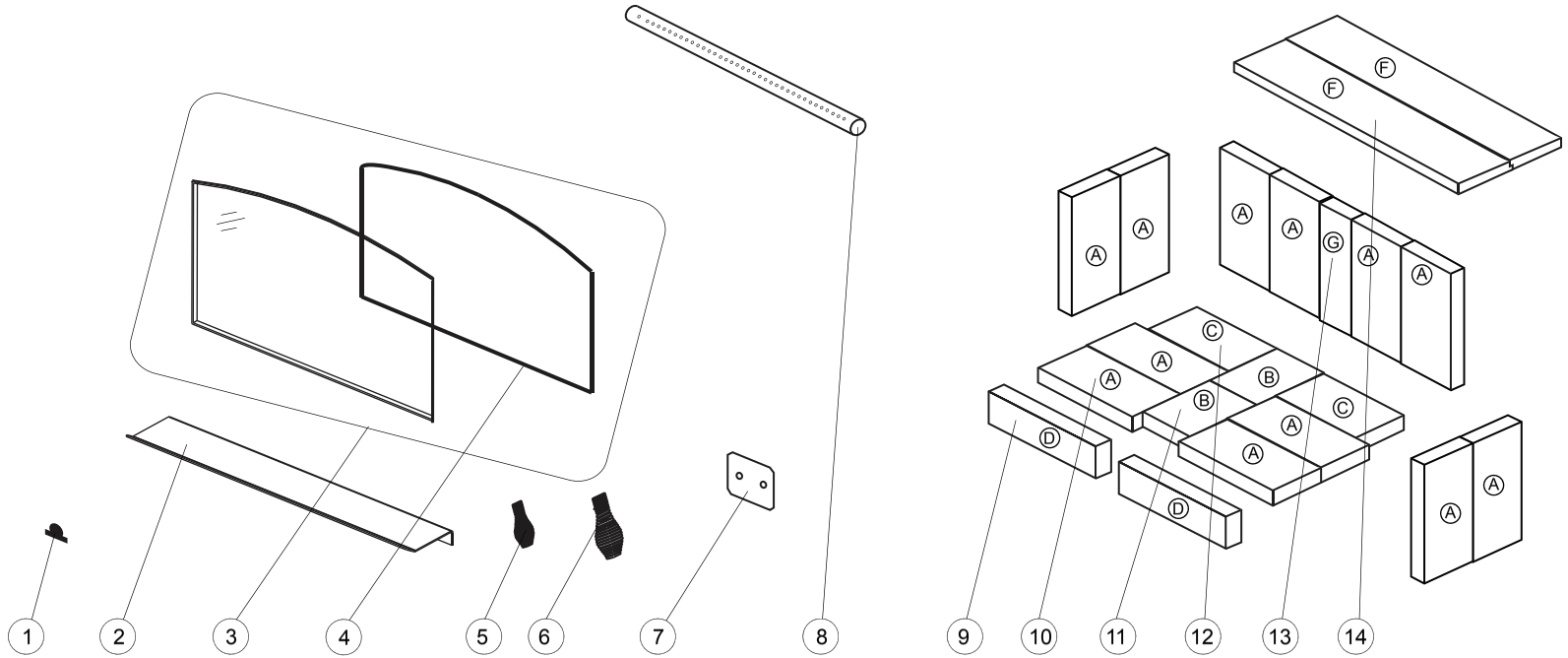

Items may not appear exactly as illustrated.

Ref. No.	Part Number	Description	Stocked
1	W385-0487	Timberwolf logo	Yes
2	W710-0025	Ash lip	
3	W010-2325	Glass / gasket assembly	Yes
4	W370-0121	Gasket kit	
5	W325-0042	Spring handle (Small)	
6	W325-0043	Spring handle (Large)	
7	W510-0013-SER	Ash plug	

Ref. No.	Part Number	Description	Stocked
8	W720-0160	Secondary air tube	
9	W090-0018	Brick D (2.25” x 1.25” x 9”)	Yes
10	W090-0015	Brick A (4.5” x 1.25” x 9”)	Yes
11	W090-0168	Brick B (4.5” x 1.25” x 6.25”)	Yes
12	W090-0167	Brick C (4.5” x 1.25” x 7.625”)	Yes
13	W090-0172	Brick G (2” x 1.25” x 9”)	Yes
14	W010-3564	Top fibre baffle (X2)	Yes

9.1 overview

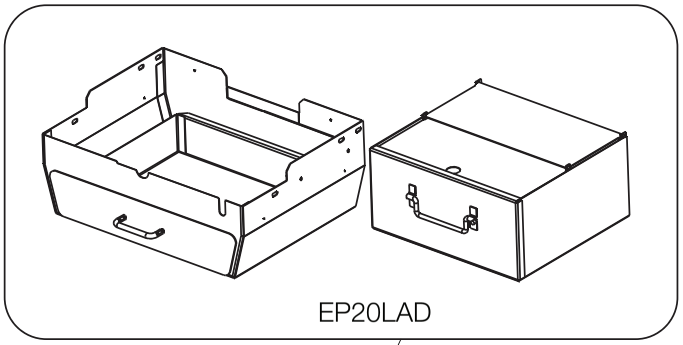

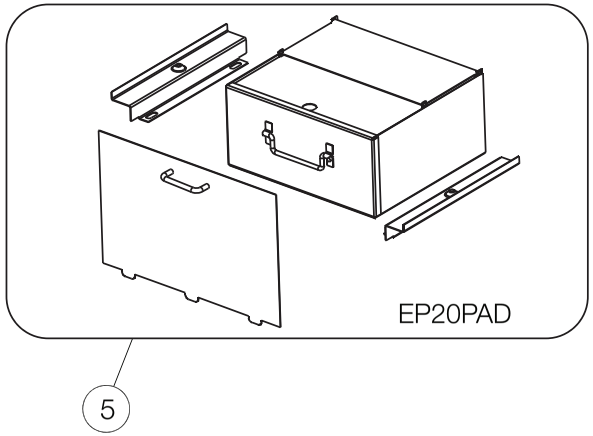

Items may not appear exactly as illustrated.

Ref. No.	Part Number	Description	Stocked
1 *	EPT70	Blower kit	
2 *	EP20P	Pedestal kit	
3 *	EP21L	Leg kit	
4	EP20LAD	Ash pan kit for EP21L leg kit	
5	EP20PAD	Ash pan kit for EP20P pedestal kit	

* Parts not illustrated.

⚠ WARNING

- Turn off the appliance completely and let cool before servicing. Only a qualified service person should service and repair this electric appliance.
- Appliance may be hot, do not service until appliance has cooled.
- Do not use abrasive cleaners.
- When checking connections, installing jumper wires (for test purposes only) or replacing components, unplug appliance from the receptacle to prevent electrical shock or damage to the component.

symptom	test solution
Can't get the fire started.	Not enough kindling / paper? Add more.
	Not enough air? Ensure air control is fully open. Also ensure that the air opening is not obstructed.
	Cold air blockage? Burn a piece of paper to establish a draft.
	Use dry seasoned wood with 20% moisture content.
	Flue blockage? Inspect chimney.
Smokes when door is open.	Cold air blockage? Burn a piece of paper to establish a draft.
	Insufficient draft? Add more pipe.
	Let air stabilize before opening door.
	Ensure baffles are positioned correctly.
	Negative pressure? Open a window near the appliance.
Appliance emits odour.	Paint curing, see "general instructions" section.
Stove doesn't burn hot enough.	Wood has more than 20% moisture.
	Insufficient draft? Add more pipe.
	Not enough air? Ensure air control is fully open. Also ensure that the air opening is not obstructed.
Wood burns too fast.	Air control may need to be adjusted down.
	Check to see ash plug is properly seated (if equipped).
	Check door gasket for adequate seal.
	Wood may be extremely dry.
Dirty glass.	Air control may be closed too far.
	Burn hotter, smaller fires.
	Use well seasoned wood with 20% moisture content.
Blower does not run.	Appliance may not be up to temperature.
	Ensure blower has power.

11.0 warranty

TIMBERWOLF products are manufactured under the strict Standard of the World Recognized ISO 9001 : 2015 Quality Management System.

TIMBERWOLF products are designed with superior components and materials, assembled by trained craftsmen who take great pride in their work. The complete appliance is thoroughly inspected by a qualified and authorized installer, service agency or supplier before packaging to ensure that you, the customer, receives the quality product that you expect from TIMBERWOLF.

TIMBERWOLF WOOD APPLIANCE LIMITED WARRANTY

The following materials and workmanship in your new TIMBERWOLF appliance are warranted against defects as defined below:
The combustion chamber is warranted against defects for a period of 5 years.
The secondary air tubes are warranted against defects for a period of 5 years.
Electrical (110V) components and wearable parts are covered and TIMBERWOLF will provide replacement parts free of charge during the first year of the limited warranty. This covers: blowers, thermal switches, switches, wiring, rheostats, firebrick, ceramic glass (thermal breakage only), fibre baffles and gasketing.*
Any labour related to warranty repair is not covered.
* Construction of models vary. Warranty applies only to components included with your specific appliance.

CONDITIONS AND LIMITATIONS

Wolf Steel warrants its TIMBERWOLF products against manufacturing defects to the original purchaser only. Registering your warranty is not necessary. Simply provide your proof of purchase along with the model and serial number to make a warranty claim. Provided that the purchase was made through an authorized TIMBERWOLF dealer your appliance is subject to the following conditions and limitations:
Warranty coverage begins on the date of original installation.
This factory warranty is non-transferable and may not be extended whatsoever by any of our representatives.
The appliance must be installed by a qualified and authorized installer, service agency or supplier. Installation must be done in accordance with the installation instructions included with the product and all local and national building and fire codes.
This limited warranty does not cover damages caused by misuse, lack of maintenance, accident, alterations, abuse or neglect. Operating the appliance on high for extended periods of time, is neglect. Parts installed from other manufacturers will nullify this warranty.
This limited warranty further does not cover any scratches, dents, corrosion or discoloring caused by excessive heat, abrasive and chemical cleaners nor chipping on porcelain enamel parts, nor any venting components used in the installation of the appliance.
In the first year only, this warranty extends to the repair or replacement of warranted parts which are defective in material or workmanship provided that the product has been operated in accordance with the operation instructions and under normal conditions.
After the first year, with respect to the TIMBERWOLF'S Limited Warranty, Wolf Steel may, at its discretion, fully discharge all obligations with respect to this warranty by refunding to the original warranted purchaser the wholesale price of any warranted but defective parts.
After the first year, Wolf Steel Ltd. will not be responsible for installation, labour or any other costs or expenses related to the reinstallation of a warranted part, and such expenses are not covered by this warranty.
Notwithstanding any provisions contained in the TIMBERWOLF'S Limited Warranty, Wolf Steel's responsibility under this warranty is defined as above and it shall not in any event extend to any incidental, consequential or indirect damages.
This warranty defines the obligations and liability of Wolf Steel with respect to the TIMBERWOLF appliance and any other warranties expressed or implied with respect to this product, its components or accessories are excluded.
Wolf Steel neither assumes, nor authorizes any third party to assume, on its behalf, any other liabilities with respect to the sale of this product.
Wolf Steel will not be responsible for: over-firing, downdrafts, spillage caused by environmental conditions such as rooftops, buildings, nearby trees, hills, mountains, inadequate vents or ventilation, excessive venting configurations, insufficient makeup air, or negative air pressures which may or may not be caused by mechanical systems such as exhaust blowers, furnaces, clothes dryers, etc.
Any damages to appliance, combustion chamber, heat exchanger or other components due to water, weather damage, long periods of dampness, condensation, damaging chemicals or cleaners will not be the responsibility of Wolf Steel.
Regular cleaning of the fine ash generated during the operation of this appliance is a necessary part of maintaining your appliance. Failure of any components, which is attributed to poor maintenance, is not warrantable and will not be covered by this policy.
Wolf Steel reserves the right to have its representative inspect any TIMBERWOLF product or part thereof prior to honouring any warranty claim.
All parts replaced under the Limited Warranty Policy are subject to a single claim.
During the first 10 years Wolf Steel Ltd. will replace or repair the defective parts covered by the lifetime warranty at our discretion free of charge. From 10 years to life, Wolf Steel Ltd. will provide replacement parts at 50% of the current retail price.
All parts replaced under the warranty will be covered for a period of 90 days from the date of their installation.
The manufacturer may require that defective parts or products be returned or that digital pictures be provided to support the claim.
Returned products are to be shipped prepaid to the manufacturer for investigation. If a product is found to be defective, the manufacturer will repair or replace such defect.
Before shipping your appliance or defective components, your dealer must obtain an authorization number. Any merchandise shipped without authorization will be refused and returned to sender.
Shipping costs are not covered under this warranty.
Additional service fees may apply if you are seeking warranty service from a dealer.
Labour, travel, diagnostic tests, shipping and other related charges are not covered by this warranty.

ALL SPECIFICATIONS AND DESIGNS ARE SUBJECT TO CHANGE WITHOUT PRIOR NOTICE DUE TO ON-GOING PRODUCT IMPROVEMENTS.

NAPOLEON CELEBRATING OVER 40 YEARS OF HOME COMFORT PRODUCTS







7200, Route Transcanadienne, Montréal, Québec H4T 1A3
24 Napoleon Road, Barrie, Ontario, Canada L4M 0G8
214 Bayview Drive, Barrie, Ontario, Canada L4N 4Y8
103 Miller Drive, Crittenden, Kentucky, USA 41030

Phone: 1-866-820-8686
napoleon.com

REPORT NO. /
NUMÉRO DE RAPPORT:
0415WS014E

LISTED SOLID FUEL BURNING SPACE HEATER / POÊLE À COMBUSTIBLE SOLIDE HOMOLOGUÉ.

TESTED TO: / TESTÉ SELON:
UL1482 - 2010 / ULC S627 - 00
MODEL / MODÈLE: S15

THIS WOOD HEATER NEEDS PERIODIC INSPECTION AND REPAIR FOR PROPER OPERATION. CONSULT THE OWNER'S MANUAL FOR FURTHER INFORMATION. IT IS AGAINST FEDERAL REGULATIONS TO OPERATE THIS WOOD HEATER IN A MANNER INCONSISTENT WITH THE OPERATING INSTRUCTIONS IN THE OWNER'S MANUAL. / CE POÊLE À BOIS DOIT ÊTRE INSPECTÉ ET RÉPARÉ PÉRIODIQUEMENT POUR UN FONCIONNEMENT CORRECT. CONSULTEZ LE MANUEL DU PROPRIÉTAIRE POUR PLUS D'INFORMATIONS. IL EST CONTRE LES RÈGLEMENTS FÉDÉRAUX POUR FAIRE FONCTIONNER CE POÊLE À BOIS D'UNE MANIÈRE INCOMPATIBLE AVEC LES INSTRUCTIONS DE FONCTIONNEMENT DANS LE MANUEL DU PROPRIÉTAIRE.

INSTALL AND USE ONLY IN ACCORDANCE WITH WOLF STEEL LTD.'S INSTRUCTIONS. CONTACT LOCAL BUILDING OR FIRE OFFICIALS ABOUT RESTRICTIONS AND INSTALLATION INSPECTION IN YOUR AREA.
MINIMUM CEILING HEIGHT: 7FT (2.13M)
HEARTH EXTENSION / COMBUSTIBLE FLOOR PROTECTION: IF INSTALLED ON A COMBUSTIBLE FLOOR, UNIT MUST BE PLACED ON A NON-COMBUSTIBLE FLOOR PROTECTOR EXTENDING 18" (455MM) (CANADA) / 16" (406MM) (U.S.A.) IN FRONT AND 8" (205MM) TO THE SIDES AND BACK.
CHIMNEY TYPE: MINIMUM 6" (152MM) DIAMETER LISTED (UL 103HT) RESIDENTIAL CHIMNEY.
CHIMNEY CONNECTOR: 6" (152MM) DIAMETER MINIMUM 24 GAUGE STEEL MINIMUM CLEARANCE FROM HORIZONTAL CONNECTOR AND CEILING 18" (455MM).
DO NOT OBSTRUCT SPACE UNDER HEATER.
SPECIAL METHODS ARE REQUIRED WHEN PASSING A CHIMNEY THROUGH A WALL OR CEILING. SEE INSTRUCTIONS AND BUILDING CODES.
DO NOT CONNECT THIS UNIT TO A CHIMNEY FLUE SERVING ANOTHER APPLIANCE.
FUEL: FOR USE WITH SOLID WOOD FUEL ONLY. DO NOT USE GRATE OR ELEVATE FIRE. BUILD WOOD FIRE DIRECTLY ON HEARTH.
WARNING: RISK OF SMOKE SPILLAGE. OPERATE ONLY WITH DOOR FULLY CLOSED.
REPLACE GLASS ONLY WITH CERAMIC GLASS.
DO NOT OVERFIRE. IF HEATER OR CHIMNEY CONNECTORS GLOW, YOU ARE OVERFIRING. INSPECT AND CLEAN CHIMNEY FREQUENTLY. UNDER CERTAIN CONDITIONS OF USE CREOSOTE BUILD-UP MAY OCCUR RAPIDLY.
OPTIONAL LEGS: IF TO BE INSTALLED WITH OPTIONAL LEGS, LEGS MUST BE INSTALLED PRIOR TO OPERATION.
OPTIONAL BLOWER KIT: EP65M, 115V, 60HZ, 0.82AMP. ROUTE CORD AWAY FROM UNIT.
DANGER: RISK OF ELECTRICAL SHOCK. DISCONNECT POWER BEFORE SERVICING UNIT.

POUR INSTALLATION ET UTILISATION CONFORMÉMENT AUX INSTRUCTIONS DE WOLF STEEL LTÉE. RENSEIGNEZ-VOUS AUPRÈS DES AUTORITÉS LOCALES DU BÂTIMENT OU DU SERVICE DES INCENDIES AU SUJET DES RESTRICTIONS ET DES INSPECTIONS D'INSTALLATION DANS VOTRE RÉGION.
HAUTEUR DE PLAFOND MINIMAL 7" (2,13M).
PROLONGEMENT D'ÂTRE/PROTECTION DU PLANCHER COMBUSTIBLE: SI INSTALLÉ SUR UN PLANCHER COMBUSTIBLE, L'APPAREIL DOIT ÊTRE PLACÉ SUR UNE PLAQUE PROTECTRICE INCOMBUSTIBLE S'ÉTENDANT SUR 18" (455mm) (CANADA) / 16" (406MM) (É.U.) À L'AVANT ET 8" (205MM) À L'ARRIÈRE ET SUR LES CÔTÉS.
TYPE DE CHEMINÉE: CHEMINÉE RÉSIDENTIELLE DE 6" DE DIAMÈTRE (152MM) HOMOLOGUÉE (UL 103HT).
RACCORD DE CHEMINÉE: DIAMÈTRE DE 6" (152MM) D'ACIER DE CALIBRE 24 MINIMUM. 18" (455MM) DE DÉGAGEMENT MINIMAL ENTRE LE RACCORD HORIZONTAL ET LE PLAFOND.
NE RIEN ENTREPOSER SOUS LE CHAUFFAGE.
DES MÉTHODES SPÉCIALES SONT REQUISES LORSQUE UNE CHEMINÉE TRAVERSE UN MUR OU UN PLAFOND. VOIR LES INSTRUCTIONS ET LES CODES DU BÂTIMENT.
NE PAS RACCORDER À LA CHEMINÉE D'UN AUTRE APPAREIL.
COMBUSTIBLE: POUR USAGE AVEC LE BOIS SEULEMENT. N'UTILISEZ PAS DE CHENET OU NE SURÉLEVEZ PAS LE BOIS. PRÉPAREZ LE FEU DIRECTEMENT SUR L'ÂTRE.
AVERTISSEMENT: RISQUE D'ÉCHAPPEMENT DE FUMÉE. TENIR LA PORTE FERMÉE LORSQUE LE POÊLE FONCTIONNE. REMPLACEZ LA VITRE PAR UNE VITRE EN CÉRAMIQUE SEULEMENT.
NE SURCHAUFFEZ PAS L'APPAREIL. SI L'APPAREIL OU LES RACCORDS ROUGEOIENT, L'APPAREIL SURCHAUFFÉE. INSPECTEZ ET NETTOYEZ LA CHEMINÉE FRÉQUEMMENT. DANS CERTAINES CONDITIONS, DES DÉPÔTS DE CRÉOSOTE PEUVENT SE FORMER RAPIDEMENT.
PATTES OPTIONNELLES : SI LES PATTES OPTIONNELLES SONT INSTALLÉES, ELLES DOIVENT ÊTRE INSTALLÉES AVANT DE FAIRE FONCTIONNER L'APPAREIL.
SOUFFLERIE OPTIONNELLE: EP65M, 115V, 60HZ, 0,82A. TENEZ LE CORDON ÉLECTRIQUE LOIN DE L'APPAREIL.
DANGER: RISQUE DE SECOUSSE ÉLECTRIQUE. DÉBRANCHEZ AVANT DE PROCÉDER À L'ENTRETIEN.

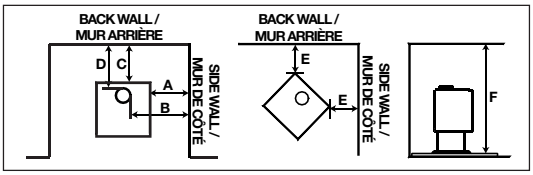

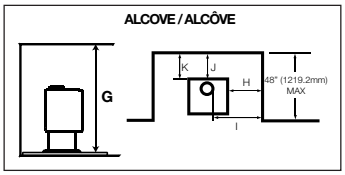

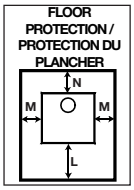

PARALLEL & CORNER / PARALLÈLE & COIN	SINGLE WALL CONNECTEOR / TUYAU DE RACCORDEMENT À PAROI SIMPLE	DOUBLE WALL CONNECTEOR / TUYAU DE RACCORDEMENT À PAROI DOUBLE
Sidewall / mur de côté (A)	19" (48.3cm)	
Sidewall to flue / mur de côté à la buse (B	28 7/8" (73.3cm)	
Backwall / mur arrière (C)	17 1/2" (44.5cm)	12 1/2" (31.8cm)
Backwall to flue / mur arrière à la buse (D)	21" (53.3cm)	16" (40.6cm)
Corner / coin (E)	11" (279mm)	7" (178mm)
Ceiling / plafond (F)	84" (213.4cm)	75" (190.5cm)
ALCOVE / ALCÔVE		
Ceiling / plafond (G)	N/A	75" (190.5cm)
Sidewall / sur de côté (H)	19" (48.3cm)	
Sidewall to flue / mur de côté à la buse (I)	28 7/8" (73.3cm)	
Backwall / mur arrière (J)	17 1/2" (44.5cm)	12 1/2" (31.8cm)
Backwall to flue / mur arrière à la buse (K	21" (53.3cm)	16" (40.6cm)

MINIMUM FLOOR PROTECTION / PROTECTION MINIMAL DU PLANCHER			
	FRONT / DEVANT (L)	SIDES / CÔTÉS (M)	BACK / ARRIÈRE (N)
CANADA	18" (45.7cm)	8" (203mm)	
USA / É-U	16" (40.6cm)	8" (203mm)	

Clearances can be reduced with shielding acceptable to local authorities. Reduced installation must comply with NFPA 211 or CAN/CSA-B365. / Il est possible de réduire les dégagements à l'aide d'un protecteur conforme aux normes des autorités locales. Une installation réduite doit être conforme aux normes NFPA 211 ou au CAN/CSA B365.

MANUFACTURE DATE: / DATE DE FABRICATION:

YEAR: ☐ 2019 ☐ 2020 ☐ 2021 ☐ 2022 ☐ 2023 ☐ 2024

MONTH: ☐1 ☐2 ☐3 ☐4 ☐5 ☐6 ☐7 ☐8 ☐9 ☐10 ☐11 ☐12

CAUTION: **HOT WHILE IN OPERATION. DO NOT TOUCH. KEEP CHILDREN, CLOTHING AND FURNITURE AWAY. CONTACT MAY CAUSE SKIN BURNS. SEE NAMEPLATE AND INSTRUCTIONS.**

ATTENTION: **QUAND L'APPAREIL FONCTIONNE, LA SURFACE DEVIENT CHAUDE. NE PAS TOUCHER. TENIR LES ENFANTS, LES VÊTEMENTS ET LES MEUBLES À L'ÉCAR. LE CONTACT PEUT CAUSER DES BRÛLURES À LA PEAU. VOIR LA PLAQUE D'HOMOLOGATION ET LES INSTRUCTIONS.**

U.S. ENVIRONMENTAL PROTECTION AGENCY Certified to comply with 2020 particulate emission standards using cordwood.
Certifié conforme à la norme d'émanation de particles de 2020 en utilisant bois de corde. 40 CFR Part 60, Subpart AAA
1.57 Grams Per Hour / 2020 Cordwood / 1,57 Grammes par heure / Bois de Corde 2020. Efficiency / efficacité: 71%.

WOLF STEEL LTD. ■
24 NAPOLEON ROAD, BARRIE, ON, L4M 0G8 CANADA

NAC GUANGZHOU P.R.C. ■
NO.69 HEFENG ROAD, GUANGZHOU,CHINA

S15

W385-2367

MAXIMUM SIZE: 6" x 11.125"

MATERIAL: SILVER ON BLACK BACKGROUND

SPECIFICATIONS:
CLASS III A-1 PERMANENT LABEL
WATERPROOF, NONWATER SOLUBLE ADHESIVE CAPABLE OF WITHSTANDING 300°F/149°C TEMPERATURES
SERIAL NUMBER TO BE ASCENDING FROM **S15 017696**
CAUTION MINIMUM LETTER SIZE (18 POINT TYPE) AND 0.12" (8.64 POINT TYPE) FOR THE REMAINDER OF THAT WARNING WITH VERTICAL SPACING BETWEEN LINES OF 0.046" (3.312 POINT TYPE).
LOG / FIRE WARNING SYMBOL TO BE RED

WOLF STEEL LTD
TITLE: RATING PLATE LABEL S15
REVISION:
DWG#: W385-2367
DATE: 02.19.19_

REPORT NO. /
NUMÉRO DE RAPPORT:
0415WS014E

LISTED SOLID FUEL BURNING SPACE HEATER / POÊLE À COMBUSTIBLE SOLIDE HOMOLOGUÉ.

TESTED TO: / TESTÉ SELON: UL1482 - 2010 / ULC S627 - 00

MODEL / MODÈLE: 2100

THIS WOOD HEATER NEEDS PERIODIC INSPECTION AND REPAIR FOR PROPER OPERATION. CONSULT THE OWNER'S MANUAL FOR FURTHER INFORMATION. IT IS AGAINST FEDERAL REGULATIONS TO OPERATE THIS WOOD HEATER IN A MANNER INCONSISTENT WITH THE OPERATING INSTRUCTIONS IN THE OWNER'S MANUAL. / CE POÊLE À BOIS DOIT ÊTRE INSPECTÉ ET RÉPARÉ PÉRIODIQUEMENT POUR UN FONCIONNEMENT CORRECT. CONSULTEZ LE MANUEL DU PROPRIÉTAIRE POUR PLUS D'INFORMATIONS. IL EST CONTRE LES RÈGLEMENTS FÉDÉRAUX POUR FAIRE FONCTIONNER CE POÊLE À BOIS D'UNE MANIÈRE INCOMPATIBLE AVEC LES INSTRUCTIONS DE FONCTIONNEMENT DANS LE MANUEL DU PROPRIÉTAIRE.

INSTALL AND USE ONLY IN ACCORDANCE WITH WOLF STEEL LTD.'S INSTRUCTIONS. CONTACT LOCAL BUILDING OR FIRE OFFICIALS ABOUT RESTRICTIONS AND INSTALLATION INSPECTION IN YOUR AREA.
MINIMUM CEILING HEIGHT: 7FT (2.13M)

HEARTH EXTENSION / COMBUSTIBLE FLOOR PROTECTION: IF INSTALLED ON A COMBUSTIBLE FLOOR, UNIT MUST BE PLACED ON A NON-COMBUSTIBLE FLOOR PROTECTOR EXTENDING 18" (455MM) (CANADA) / 16" (406MM) (U.S.A.) IN FRONT AND 8" (205MM) TO THE SIDES AND BACK.

CHIMNEY TYPE: MINIMUM 6" (152MM) DIAMETER LISTED (UL 103HT) RESIDENTIAL CHIMNEY.

CHIMNEY CONNECTOR: 6" (152MM) DIAMETER MINIMUM 24 GAUGE STEEL MINIMUM CLEARANCE FROM HORIZONTAL CONNECTOR AND CEILING 18" (455MM).
DO NOT OBSTRUCT SPACE UNDER HEATER.
SPECIAL METHODS ARE REQUIRED WHEN PASSING A CHIMNEY THROUGH A WALL OR CEILING. SEE INSTRUCTIONS AND BUILDING CODES.
DO NOT CONNECT THIS UNIT TO A CHIMNEY FLUE SERVING ANOTHER APPLIANCE.

FUEL: FOR USE WITH SOLID WOOD FUEL ONLY. DO NOT USE GRATE OR ELEVATE FIRE. BUILD WOOD FIRE DIRECTLY ON HEARTH.

WARNING: RISK OF SMOKE SPILLAGE. OPERATE ONLY WITH DOOR FULLY CLOSED.
REPLACE GLASS ONLY WITH CERAMIC GLASS.
DO NOT OVERFIRE. IF HEATER OR CHIMNEY CONNECTORS GLOW, YOU ARE OVERFIRING. INSPECT AND CLEAN CHIMNEY FREQUENTLY. UNDER CERTAIN CONDITIONS OF USE CREOSOTE BUILD-UP MAY OCCUR RAPIDLY.

OPTIONAL LEGS: IF TO BE INSTALLED WITH OPTIONAL LEGS, LEGS MUST BE INSTALLED PRIOR TO OPERATION.

OPTIONAL BLOWER KIT: EP65M, 115V, 60HZ, 0.82AMP. ROUTE CORD AWAY FROM UNIT.

DANGER: RISK OF ELECTRICAL SHOCK. DISCONNECT POWER BEFORE SERVICING UNIT.

POUR INSTALLATION ET UTILISATION CONFORMÉMENT AUX INSTRUCTIONS DE WOLF STEEL LTÉE. RENSEIGNEZ-VOUS AUPRÈS DES AUTORITÉS LOCALES DU BÂTIMENT OU DU SERVICE DES INCENDIES AU SUJET DES RESTRICTIONS ET DES INSPECTIONS D'INSTALLATION DANS VOTRE RÉGION.
HAUTEUR DE PLAFOND MINIMAL 7" (2,13M).

PROLONGEMENT D'ÂTRE/PROTECTION DU PLANCHER COMBUSTIBLE: SI INSTALLÉ SUR UN PLANCHER COMBUSTIBLE, L'APPAREIL DOIT ÊTRE PLACÉ SUR UNE PLAQUE PROTECTRICE INCOMBUSTIBLE S'ÉTENDANT SUR 18" (455mm) (CANADA) / 16" (406MM) (É.U.) À L'AVANT ET 8" (205MM) À L'ARRIÈRE ET SUR LES CÔTÉS.

TYPE DE CHEMINÉE: CHEMINÉE RÉSIDENTIELLE DE 6" DE DIAMÈTRE (152MM) HOMOLOGUÉE (UL 103HT).

RACCORD DE CHEMINÉE: DIAMÈTRE DE 6" (152MM) D'ACIER DE CALIBRE 24 MINIMUM. 18" (455MM) DE DÉGAGEMENT MINIMAL ENTRE LE RACCORD HORIZONTAL ET LE PLAFOND.
NE RIEN ENTREPOSER SOUS LE CHAUFFAGE.
DES MÉTHODES SPÉCIALES SONT REQUISES LORSQUE UNE CHEMINÉE TRAVERSE UN MUR OU UN PLAFOND. VOIR LES INSTRUCTIONS ET LES CODES DU BÂTIMENT.
NE PAS RACCORDER À LA CHEMINÉE D'UN AUTRE APPAREIL.

COMBUSTIBLE: POUR USAGE AVEC LE BOIS SEULEMENT. N'UTILISEZ PAS DE CHENET OU NE SURÉLEVEZ PAS LE BOIS. PRÉPAREZ LE FEU DIRECTEMENT SUR L'ÂTRE.

AVERTISSEMENT: RISQUE D'ÉCHAPPEMENT DE FUMÉE. TENIR LA PORTE FERMÉE LORSQUE LE POÊLE FONCTIONNE. REMPLACEZ LA VITRE PAR UNE VITRE EN CÉRAMIQUE SEULEMENT.
NE SURCHAUFFEZ PAS L'APPAREIL. SI L'APPAREIL OU LES RACCORDS ROUGEOIENT, L'APPAREIL SURCHAUFFÉE. INSPECTEZ ET NETTOYEZ LA CHEMINÉE FRÉQUEMMENT. DANS CERTAINES CONDITIONS, DES DÉPÔTS DE CRÉOSOTE PEUVENT SE FORMER RAPIDEMENT.

PATTES OPTIONNELLES : SI LES PATTES OPTIONNELLES SONT INSTALLÉES, ELLES DOIVENT ÊTRE INSTALLÉES AVANT DE FAIRE FONCTIONNER L'APPAREIL.

SOUFFLERIE OPTIONNELLE: EP65M, 115V, 60HZ, 0,82A. TENEZ LE CORDON ÉLECTRIQUE LOIN DE L'APPAREIL.

DANGER: RISQUE DE SECOUSSE ÉLECTRIQUE. DÉBRANCHEZ AVANT DE PROCÉDER À L'ENTRETIEN.

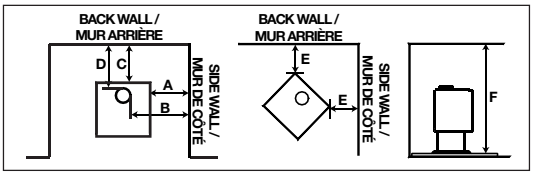

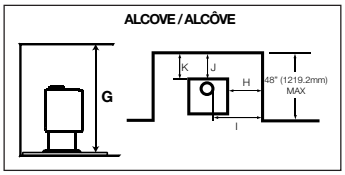

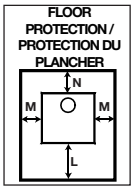

PARALLEL & CORNER / PARALLÈLE & COIN	SINGLE WALL CONNECTEOR / TUYAU DE RACCORDEMENT À PAROI SIMPLE	DOUBLE WALL CONNECTEOR / TUYAU DE RACCORDEMENT À PAROI DOUBLE
Sidewall / mur de côté (A)	19" (48.3cm)	
Sidewall to flue / mur de côté à la buse (B	28 7/8" (73.3cm)	
Backwall / mur arrière (C)	17 1/2" (44.5cm)	12 1/2" (31.8cm)
Backwall to flue / mur arrière à la buse (D)	21" (53.3cm)	16" (40.6cm)
Corner / coin (E)	11" (279mm)	7" (178mm)
Ceiling / plafond (F)	84" (213.4cm)	75" (190.5cm)
ALCOVE / ALCÔVE		
Ceiling / plafond (G)	N/A	75" (190.5cm)
Sidewall / sur de côté (H)	19" (48.3cm)	
Sidewall to flue / mur de côté à la buse (I)	28 7/8" (73.3cm)	
Backwall / mur arrière (J)	17 1/2" (44.5cm)	12 1/2" (31.8cm)
Backwall to flue / mur arrière à la buse (K	21" (53.3cm)	16" (40.6cm)

MINIMUM FLOOR PROTECTION / PROTECTION MINIMAL DU PLANCHER			
	FRONT / DEVANT (L)	SIDES / CÔTÉS (M)	BACK / ARRIÈRE (N)
CANADA	18" (45.7cm)	8" (203mm)	
USA / É-U	16" (40.6cm)	8" (203mm)	

Clearances can be reduced with shielding acceptable to local authorities. Reduced installation must comply with NFPA 211 or CAN/CSA-B365. / Il est possible de réduire les dégagements à l'aide d'un protecteur conforme aux normes des autorités locales. Une installation réduite doit être conforme aux normes NFPA 211 ou au CAN/CSA B365.

MANUFACTURE DATE: / DATE DE FABRICATION:

YEAR: ☐ 2019 ☐ 2020 ☐ 2021 ☐ 2022 ☐ 2023 ☐ 2024

MONTH: ☐1 ☐2 ☐3 ☐4 ☐5 ☐6 ☐7 ☐8 ☐9 ☐10 ☐11 ☐12

CAUTION: **HOT WHILE IN OPERATION. DO NOT TOUCH. KEEP CHILDREN, CLOTHING AND FURNITURE AWAY. CONTACT MAY CAUSE SKIN BURNS. SEE NAMEPLATE AND INSTRUCTIONS.**

ATTENTION: **QUAND L'APPAREIL FONCTIONNE, LA SURFACE DEVIENT CHAUDE. NE PAS TOUCHER. TENIR LES ENFANTS, LES VÊTEMENTS ET LES MEUBLES À L'ÉCAR. LE CONTACT PEUT CAUSER DES BRÛLURES À LA PEAU. VOIR LA PLAQUE D'HOMOLOGATION ET LES INSTRUCTIONS.**

U.S. ENVIRONMENTAL PROTECTION AGENCY Certified to comply with 2020 particulate emission standards using cordwood.
Certifié conforme à la norme d'émanation de particles de 2020 en utilisant bois de corde. 40 CFR Part 60, Subpart AAA
1.57 Grams Per Hour / 2020 Cordwood / 1,57 Grammes par heure / Bois de Corde 2020. Efficiency / efficacité: 71%.

WOLF STEEL LTD. ■
24 NAPOLEON ROAD, BARRIE, ON, L4M 0G8 CANADA

NAC GUANGZHOU P.R.C. ■
NO.69 HEFENG ROAD, GUANGZHOU,CHINA

2100

W385-2373

MAXIMUM SIZE: 6" x 11.125"

MATERIAL: SILVER ON BLACK BACKGROUND

SPECIFICATIONS:
CLASS III A-1 PERMANENT LABEL
WATERPROOF, NONWATER SOLUBLE ADHESIVE CAPABLE OF WITHSTANDING 300°F/149°C TEMPERATURES
SERIAL NUMBER TO BE ASCENDING FROM **2100 017696**
CAUTION MINIMUM LETTER SIZE (18 POINT TYPE) AND 0.12" (8.64 POINT TYPE) FOR THE REMAINDER OF THAT WARNING WITH VERTICAL SPACING BETWEEN LINES OF 0.046" (3.312 POINT TYPE).
LOG / FIRE WARNING SYMBOL TO BE RED

WOLF STEEL LTD

TITLE: RATING PLATE LABEL 2100-1

REVISION:

DWG#: W385-2373

DATE: 02.22.19_

APPENDIX 8: Photographs of test set up

Dilution picture Dia 8

Picture 1: Sampling system

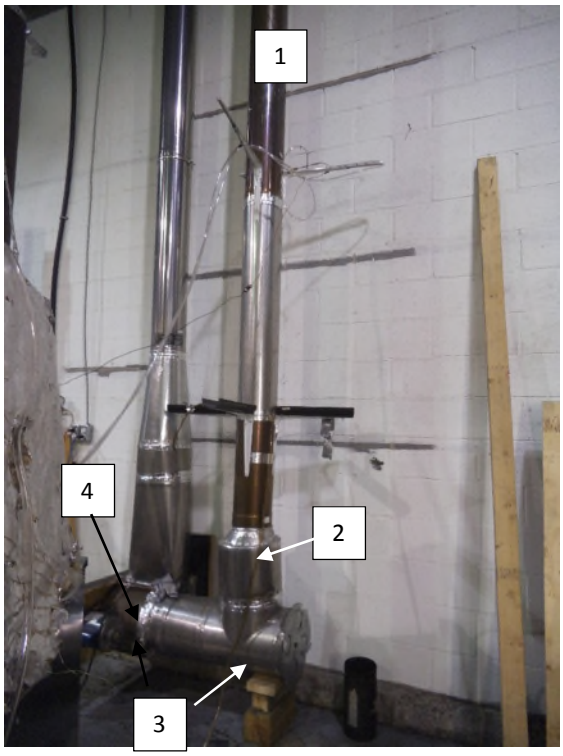

1 : 8 in dia Stainless steel pipe

2 : 16 in. Between sampling probe and lower elbow

3 : Air intake with damper to adjust flow rate

4 : Exhaust blower

Picture 2: Hood and mixing baffle

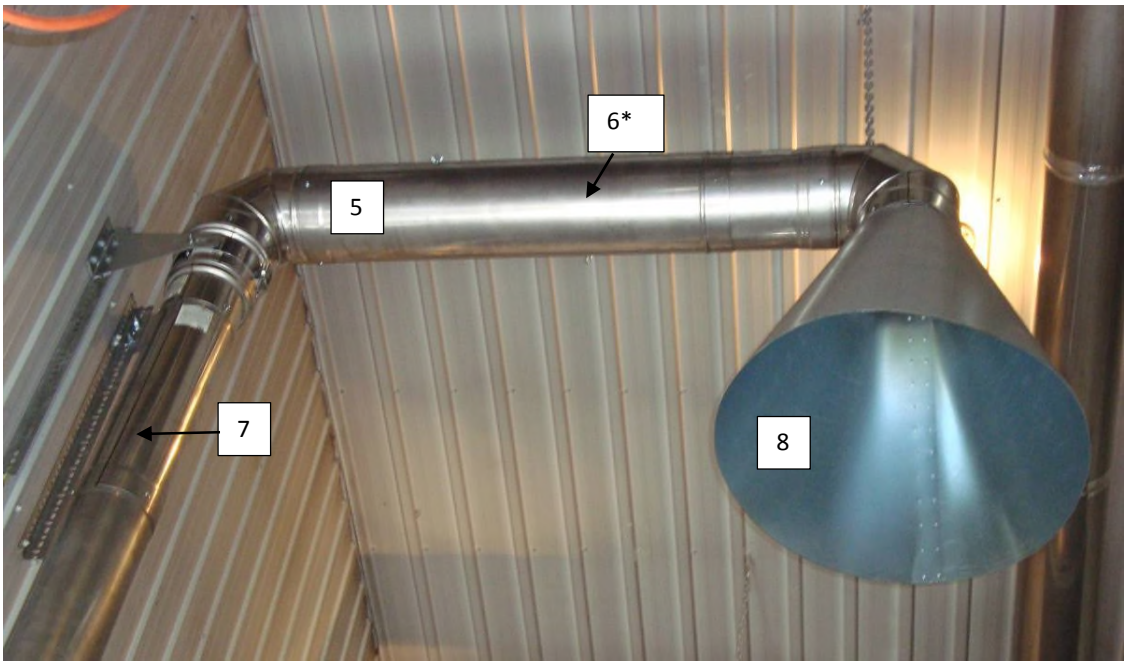

*The arrow point the deflectors inside of the pipe

5 : 8 in. dia. Stainless steel pipe

6 : Mixing baffle (2) location 1 foot between baffles

7 : 10 feet long between velocity port and upper elbow

8 : 48 in. dia. Galvanized steel smoke captures hood

Picture 3: Stack sampling

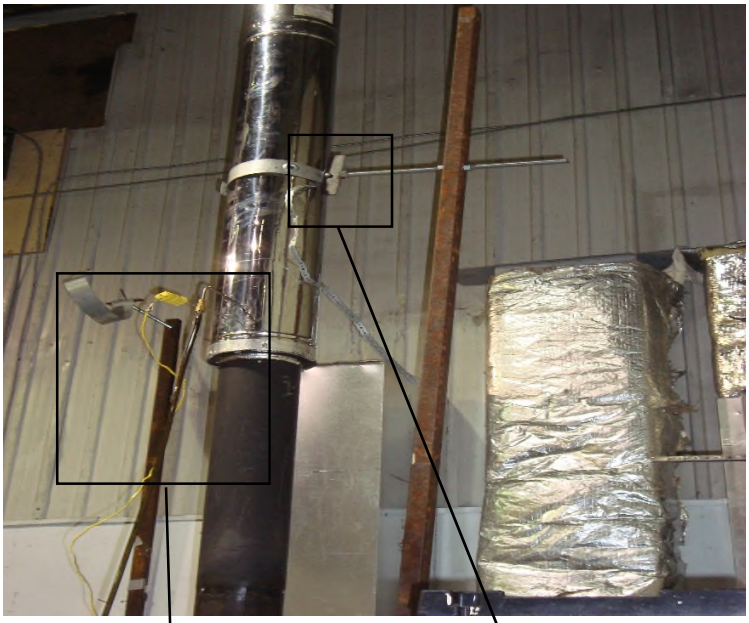

Picture 3.1: Gas analysis and temperature probe

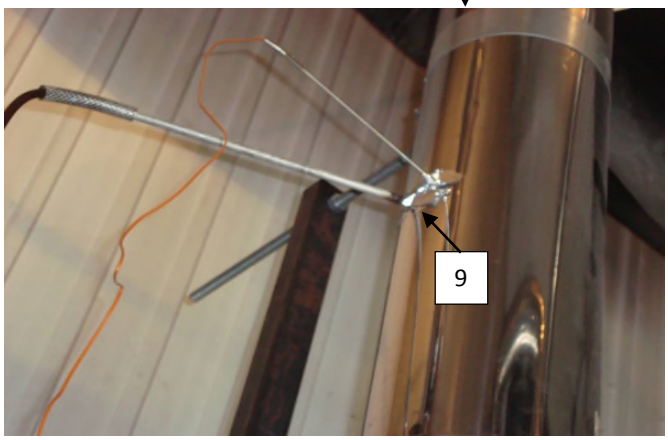

Picture 3.2: chimney support

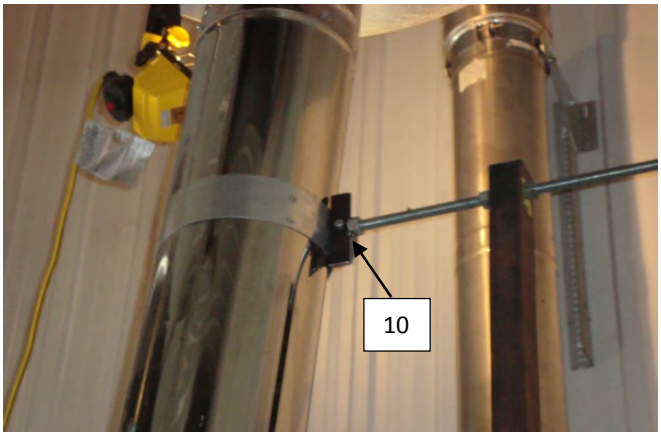

9 : Temperature and gas analyser sampling ports located 9 feet above platform

10 : Exhaust system support bracket

Picture 4: Tunnel flow measurement and sampling probe

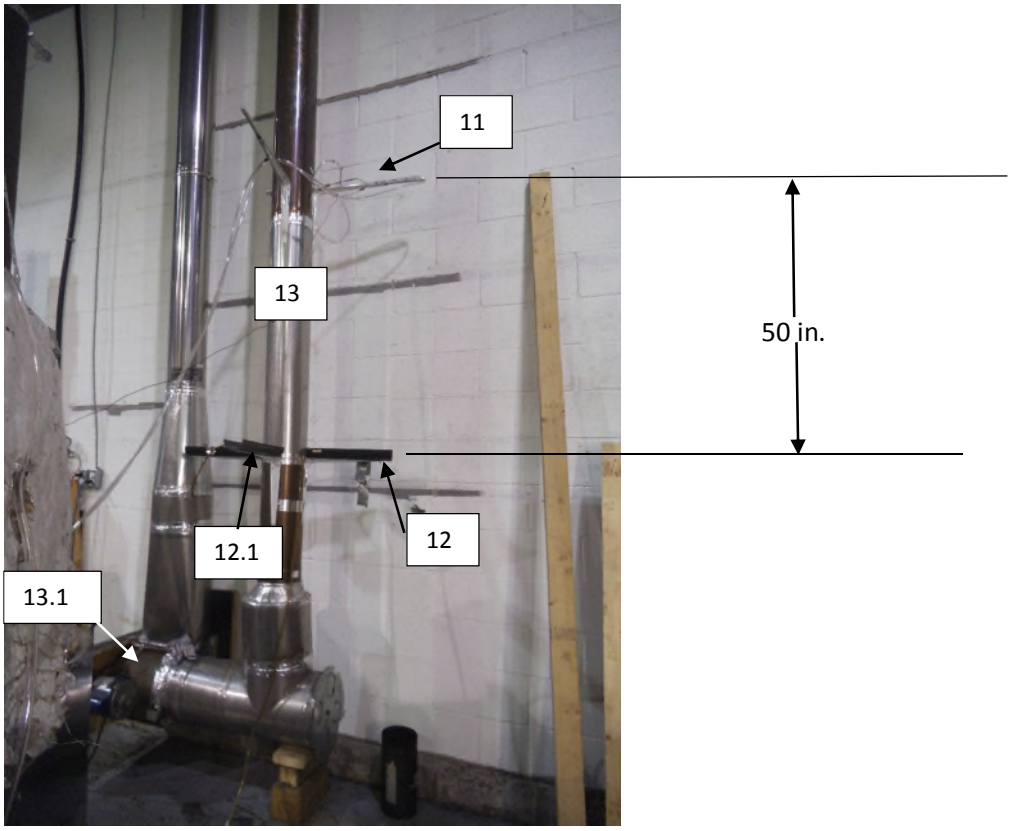

11 : Velocity port

12 :Sampling port, 2 sampling probes with 2x48 mm. dia.filter each. Filter used: Millipore AP4004700

12.1 :Sampling port, sampling probes with 2x48 mm. dia.filter each. Filter used: Millipore AP4004700, for first hour sampling

13 :18 feet long dilution tunnel

13.1 :Extraction blower

Picture 5: Draft sampling



14 : Draft sampling port located 6 in.from the flue outlet

Picture 6: Equipments

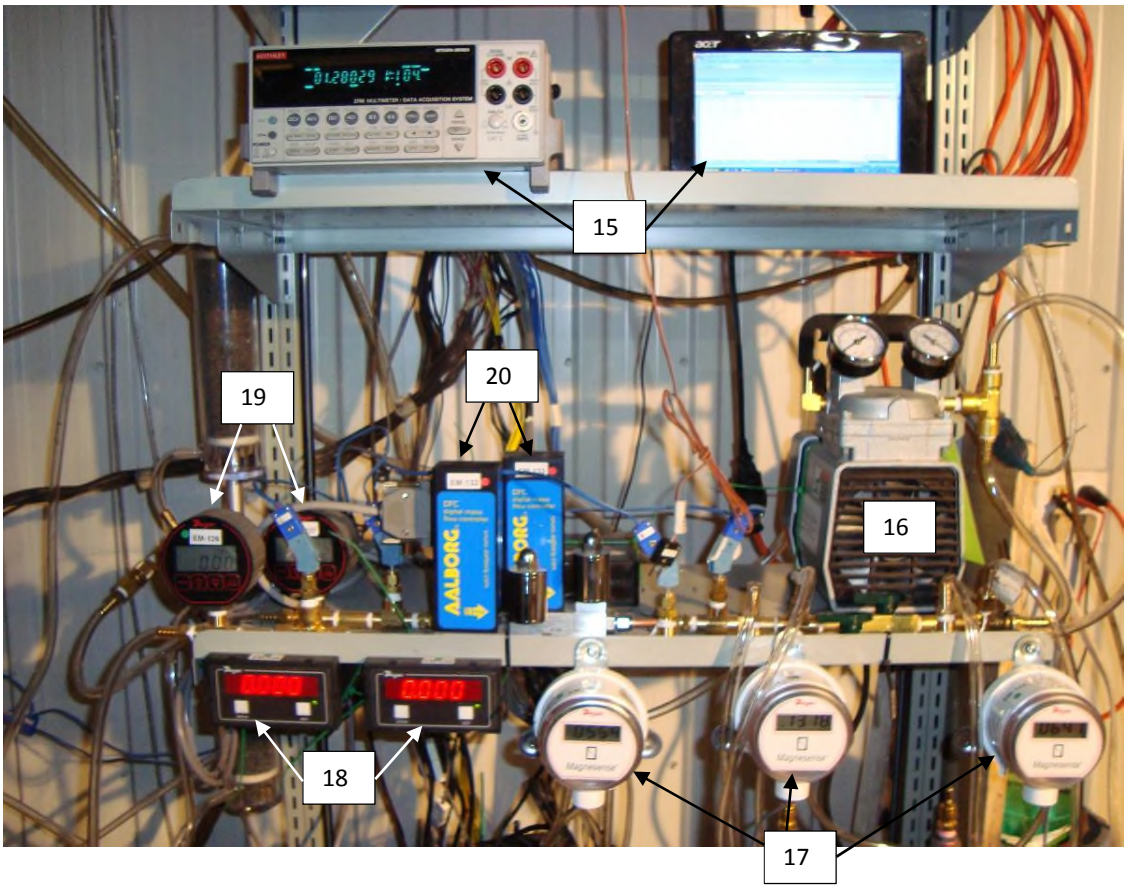

15 : Acquisition system

16 : Vacuum pump

17 : Digital manometer

18 : Digital read out for mass flow meter

19 : Digital vacuum gage

20 : Mass flow meter

Picture 7: Gaz analyser



Picture 8: Reference dry gas meter

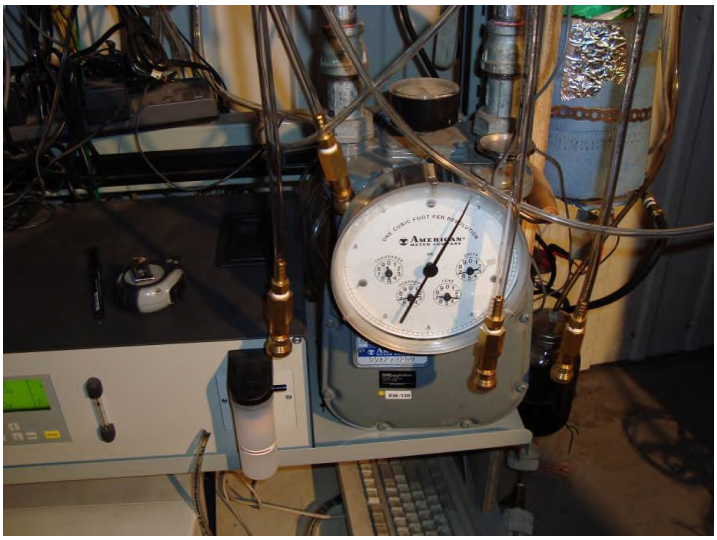

Picture 10: Water flow meter

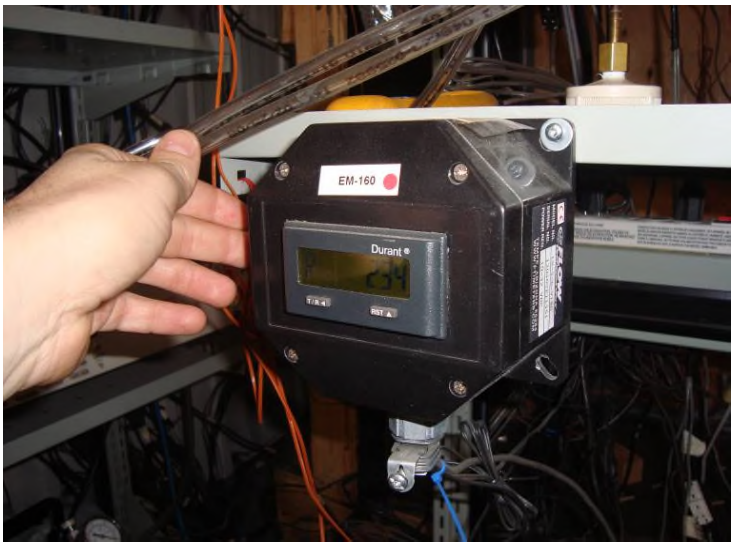

Picture 11: Dry gas meter



Picture 12 : Dilution tunnel sample system

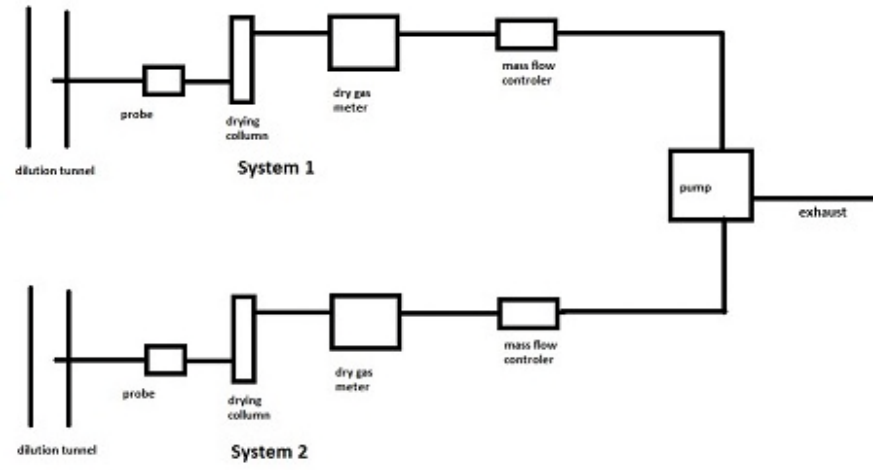

Picture 13: Dilution tunnel

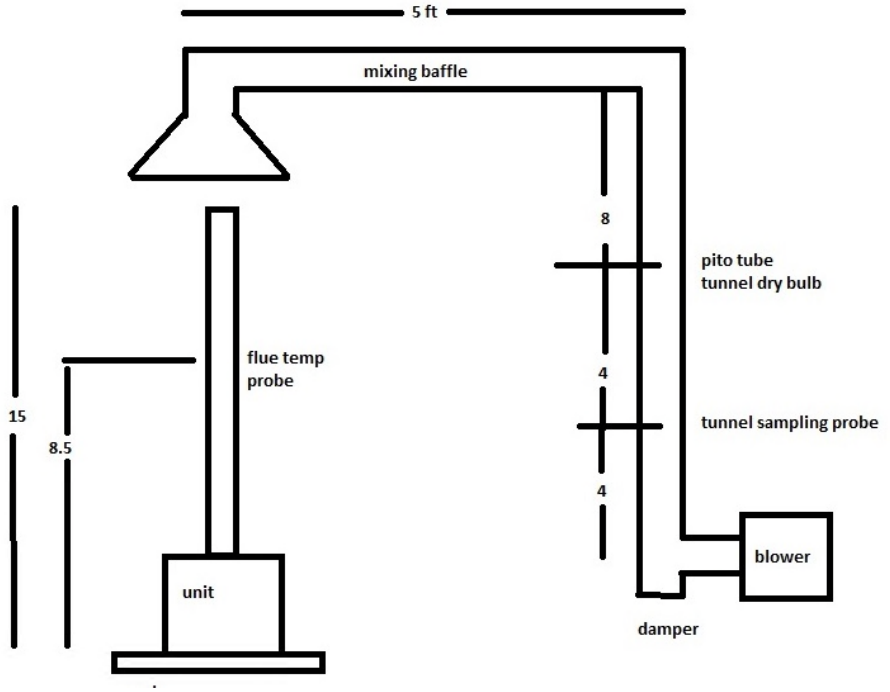

APPENDIX 9: Test load photographs

POLYTESTS
TESTING THROUGH YOUR REALITY

Run 1.1









POLYTESTS
TESTING THROUGH YOUR REALITY

Run 1.2







POLYTESTS
TESTING THROUGH YOUR REALITY

Run 2.1







APPENDIX 10: Laboratory Operating Procedures

POLYTESTS Services inc.

SFBA EMISSIONS AND EFFICIENCY TESTING LABORATORY OPERATING PROCEDURE

INTRODUCTION

This document provides a step by step guide for the technician conducting tests to EPA standard requirements. Procedures outlined here, when followed, will result in tests in conformance with EPA Methods 28R, ASTME2780, ASTME2515, ASTM E2618, Method 28WHH, Method 28 PTS, Method ALT-125, ASMTE 3053.

The primary measurements to be made are particulate emissions rates. The technician's duties include the following steps.

1. Incoming inspection of test units.
2. Set-up of test units.
3. Preliminary testing to establish unit operating procedures and familiarity with operating controls.
4. Calibration of test equipment.
5. Set-up, checking and operation of sampling apparatus.
6. Conduct of tests including complete record keeping and data recording for non-automated functions.
7. Operation of hardware and software included in automatic data acquisition system.
8. Review and analysis of data at test completion to ensure test validity.

The technician running this test must be familiar with the following documents, which are to be kept in the laboratory at all, times.

EPA METHODS

1. EPA METHODS 28R
2. ASTME2780
3. ASTME2515
4. ASTM E2618
5. METHOD 28WHH
6. METHOD 28 PTS
7. ALT-125
8. ASMTE 3053

I. APPLIANCE INSPECTION AND SET-UP

A. INCOMING INSPECTION

1. Check for completeness of unit including parts, accessories, installation and operating instructions, drawings and specifications etc. Note any discrepancies or missing parts or information.
2. Check for shipping damage. If damage has occurred, notify the laboratory manager. In some cases, repairs may be made, provided the manufacturer and laboratory manager concur that repairs will not affect the unit's performance. If damage is irrepairable, a new unit will need to be obtained.
3. Note whether unit is catalytic of non-catalytic.
4. Mark unit with manufacturer's name, model number, work order number and date received.
5. If unit is safety listed, note label data including listing agency and serial number. If unit is not listed, mark all data sheets "UNLISTED". Test results will not be released until unit passes safety tests without modification unless authorized by laboratory manager.

B. UNIT SET-UP

1. All new units must be operated for a breaking in period as follows.

    a) Non-catalytic units: Ten (48) hours at medium burn rate with Douglas Fir scrap or cordwood.
    b) Catalytic units: Fifty (50) hours at medium burn rate with Douglas Fir scrap or cordwood.

    During these break-in runs the unit may be connected to a lab chimney and fuel additions noted into the corresponding data acquisition file. For catalytic units, a thermocouple must be installed in the catalyst.

    Record catalyst temperature at 1-hour intervals or on chart recorder. Operating should continue until data shows at least fifty (50) hours of operation with catalyst temperature in excess of 500 degrees Fahrenheit (active range).

    For non-catalytic units a stack thermocouple should be installed and stack temperature recorded at 1-hour intervals. Fourthy-height (48) hours minimum burn time with a stack temperature of at least 250 degrees Fahrenheit is required.

    Once break-in is completed, allow unit to cool. Clean unit thoroughly.

2. Unit is to be placed on scale for testing. Prior to proceeding with verification process, scale should be turned on and allowed to warm up for one (1) hour minimum. Zero scale and check calibration with standard weights. One (1) 1 kg weight and one (1) 2 kg weight are provided for this purpose. Use scale verification test form no. EPA-7-TP to record results. If scale fails to reproduce weights within tolerance, check with laboratory manager before proceeding.
3. If scale checks out, place unit on scale and align so chimney will be centered in hood.
4. Attach chimney connector and chimney. Be sure all joints are sealed below sampling points. Chimney and connector should be cleaned with a wire brush. Be sure chimney connector terminates and chimney starts at proper level above scale platform. Chimney must be supported from scale so that it does not touch test enclosure or hood walls.
5. Thermocouples should be attached to surfaces of unit prior to testing. EPA requires a thermocouple on the bottom of the firebox. This must be installed prior to putting the unit on the scale. In some cases, the required thermocouple locations will be inaccessible on finished units. These units should have thermocouples installed by the manufacturer during construction. Check with the laboratory manager if problems are encountered in proper thermocouple attachment.
6. Measure firebox dimensions and record on data forms nos. EPA-2-TP. Make a three-dimensional sketch of the firebox including firebrick, baffles and obstructions. Calculate firebox volume in cubic feet with both addition and subtraction methods using forms nos. EPA-3-TP and EPA-4-TP. See Section 6.2.4 of EPA Method 28 for details of firebox volume determination.
7. If unit is catalytically equipped, additional thermocouples must be installed upstream and downstream of catalyst. Thermocouples should also be placed in the primary and secondary combustion chambers of all units.
8. Plug thermocouples into data acquisition system jacks making a check of locations and jack numbers for each test on data form no. EPA-5-TP.
9. Note that inserts are tested as if they are freestanding stoves.
10. Dilution tunnel should be cleaned prior to each certification test series and at anytime a higher burn rate follows a lower test burn rate.

II. SAMPLING SYSTEM – SET-UP

A. GAS ANALYSIS

1. Instruments should be turned on and allowed to warm up for one (1) hour minimum.

2. Calibrate analyzers as follows:

   NOTE : Prior to proceeding with calibration, make sure to use NIST tracable calibration gas bottles. Adjust flow meter if necessary at each instrument to required flow value.

   a) Using span gas, adjust span control to values specified on calibration gas label.
   b) Using nitrogene, adjust zero controls to provide a 0.00 analyzer readout.

   c) Repeat a) and b) until no further adjustment is required.
   d) Check readout vs. calibration gases (2) labels.

   The CO_2 and CO analyzers are "ZEROED" on nitrogen. The O_2 analyzer is spanned on air and set for 20.9%. It is zeroed on nitrogen as well.

3. Check for response time synchronization.

   a) With no fire in unit, allow reading to stabilize (O_2 should be 20.93, CO and CO_2 should equal O).
   b) Flow the calibration gas in the unit and start stop watch. Note the time required for each unit to reach .90 of the calibration gas bottle value. If all three analyzers reach this value within 15 seconds of each other, synchronization is adequate. If not, contact the laboratory manager. Synchronization is adjusted by internal instrument setting.

4. Set-up sample clean-up and water collection train as follows.

   a) Load impingers as follows:
   Impinger #1: 100 ml distilled water and 5 ml H_2SO_4
   Impinger #2: 100 ml distilled water and 5 ml H_2SO_4
   Impinger #3: Empty
   Impinger #4: 200 – 300 grams silica gel (dry)

b) Place impingers in container and connect with "U TUBES". Grease carefully on bottom half of ball joint so that grease will not get into tubes.

c) Connect filter to first impinger and sample line to last impinger.

e. Leak check system as follows.

1) Plug probe.
2) Turn on sample system.
3) Observe sample flow rotometer and vacuum gauge. If necessary, use vacuum; adjust valve to set vacuum to the maximum inches Hg.
4) If the float in rotometer does not stabilize below 10 on scale, system must be resealed.
5) Repeat leak check procedure until satisfactory results are obtained.

f) Just prior to starting test, fill impinger container with water and ice and record ambiant conditions on data form no. EPA-8-TP.

B. DILUTION TUNNEL SAMPLE TRAIN SET-UP

1. Filters and holders.

a) Clean probes and filter holder front housings carefully and desiccate for at least 24 hours prior to use.
b) Filters should be numbered and filter and probe combinations labeled prior to use.
c) Weigh desiccated filters and probe-filter units on analytical balance. Record weights data form no. EPA-10-TP. Note that probe and front half of front filter are to be weighed as a unit.
d) Carefully assemble filter holder units and connect to sampling systems. Check "DRIERITE" columns for adequate dry absorbent (blue).

2. Leak checking.

a) Each sample system is to be checked for leakage prior to inserting probes in tunnel.
b) Plug probes and start samplers, adjust pump bypass valve to produce a vacuum reading of 5 inches Hg. (NOTE: During test, vacuum must not exceed 5 inches unless posttest leak check shows acceptable results.)

c) Allow vacuum indication to stabilize for two (2) minutes, then record time and dry gas (DGM_1) and (DGM_2) meter readings. Wait ten (10) minutes and record dry gas meter readings again (DGM_3, DGM_4). NOTE: If mark, system is leaking too much and all seals should be checked.

d) Calculate leakage rate as follows.

1) System 1: $\frac{(DGM_3 - DGM_1)}{10} = CFM_1$

2) System 2: $\frac{(DGM_4 - DGM_2)}{10} = CFM_2$

If CFM_1 or CFM_2 is greater than .02 CFM, leakage is unacceptable and system must be resealed.

If CFM_1 or CFM_2 is greater than 0.04 X sample rate, leakage is unacceptable. For most tests, the sample rate will be about 0.15 CFM, thus leakage rates in excess of 0.04 X 0.15 = 0.006 CFM are not acceptable. Record leakage rates on form no. EPA-5-TP

e) Once leakage check is satisfactory, unplug probe and set flow to appropriate rate for test. This should be done in the minimum amount of time necessary and with the probes in ambient air. Do not insert probes in tunnel until the start of the test run. When flow is established, replug probes to prevent contamination.

III. TEST CONDUCT

A. FUEL LOAD

1. Determine optimum load weight by multiplying firebox volume in cubic feet by 7 or (10 and 12 for cordwood method). This is the load weight on an as-fired basis.
2. Determine piece size to obtain the requested load configuration and meet the test load weight criteria. The load should consist of the following: **TO BE DETERMINED**
3. Weigh out test load and adjust weight by shortening all pieces equally if necessary. Record individual piece load on form no. EPA-11-TP.

4. Measure and record moisture content of each fuel piece using Delmhorst moisture meter. Determine if fuel load moisture content is in required range. If not, construct new load using wood with required moisture content. All wood in the humidity chamber should be within range. Contact project manager if you cannot find suitable pieces. Record moisture of each individual piece load on form no. EPA-11-TP.

B. UNIT START-UP

1. Before lighting a fire, turn on dilution tunnel and set tunnel velocity to 500ft/min Record readings on data form no. EPA-9-TP.
2. Check draft imposed on cold stove with all inlets closed and a draft gauge in the chimney. If draft is greater than 0.005 inches water column, adjust tunnel to stack gap until draft is less than 0.005.
3. Check for ambient airflow around unit with hot wire anomometer. Must be less than 50 ft/min.
4. Check all equipment for proper operation. Analyzers should be on and in sample mode. Computer should be loaded with test program and awaiting test start command.
5. Zero scale and start fire with uncolored newspaper and kindling representing 10 % of test load with the same type of fuel.
6. Once kindling is burning well after 5 minutes, add splitted pieces having a bottom surface around 4 sq. inches and representing 25% of test load weight. Operate at high fire for 15 minutes. Then adjust settings to intended test run levels as per the manufacturer's.
7. Following addition of pretest fuel load (splitted pieces), start computer for data logging.
8. All fuel additions, air intake settings and operational characteristics shall be noted with associated time stamp on form no. EPA-1-TP.

C. TEST RUN

1. Once the targeted test fuel bed weight is obtained, the test is to be started as follows:

   a) Insert the sample probes into the tunnel being careful not to hit sides of tunnel with probe tip.
   b) Check tunnel pitot tube for proper position. (Pitot should be carefully cleaned prior to each test.)
   c) Turn on probe sample systems and stack sampler.
   d) Open stove door, rake coals and load stove as follows: **TO BE DETERMINED**
   e) Close door or follow manufacturer's start-up procedures. (Five (5) minutes maximum time before all doors and controls must be set to final positions for duration of test. 15 minutes allowed for ALT-125 method))
   f) An alarm will sound an audible signal at the (10) minutes intervals. This signal a reading interval. You must verify at each interval that the following readings are correctly logged by the data acquisition system and make observations of any unusual or non-routine events that could occur.

      1) Rotometer readings.
      2) Tunnel pitot tube reading.
      (Zero regularly between readings)
      3) Gas meter readings.
      4) Temperature readings.
      5) Draft reading
      6) Test laod weight
      7) CO, CO_2 and O_2 readings
      8) Observations of any unusual or non-routine events.

   g) During the test, any condition approaching unacceptable limits will be noted. The filter probes and housings are installed in small holders just outside the tunnel. If the filter temperature gets too high, you will have to increase the water flow through the cooling unit until acceptable temperatures are obtained. In between readings, check on other equipment. Be sure dryers and filters are working and monitor impinger train for proper water and ice levels etc.

   h) When the fuel charge is consumed, it will signal end of test and shut down the sampling systems. When this occurs,

remove filter holder and probes from tunnel and impingers from sample line.

IV. POST TEST PROCEDURES

A. SAMPLE RECOVERY – FILTER TRAINS

1. Carefully clean outside of probes and filter housings with alcohol.
2. Disassemble filter holder and transfer filters to clean petri dish. Scrape gasket with scalpel and collect any loose material on filters.
3. Place probe and front half of first filter holders (still assembled) and filters in desiccator. Allow 24-hour desiccation before weighing.
4. Weigh probe filter holder units and filters at six (6) hour intervals until weight change between weighings is less than 0.2 mg. Record all weights taken on data form no. EPA-10-TP.

B. CALCULATION OF RESULTS

The computer program carries out all final calculations. When run, it will ask for data from forms used during the test. Enter data as called for.

GENERAL

This guide cannot cover every possible contingency, which may develop during a particular test program. Many questions, which may arise, can be answered by a complete understanding of the test standards and their intent. When in doubt on any detail, check with the laboratory manager and be sure you understand the procedures involved.

It is critical that all spaces on the data forms be properly filled in. Each test must be represented by a complete record of what was done and when.

APPENDIX 11: Sample calculations

Validation du fichier de calcul avec les équations provenant des normes:
ASTM E2515-11
ASTME3053-17

Equation 9,2 (1) $$M_{fldb} = \sum (M_{flnwb})\,(100)/(100 + MC_{fln}))$$

Nomenclature

M_{FLdb}	Weight of test fuel load, dry basis lb (kg)
M_{FLnwb}	Weight of each test fuel pieces, n, in test fuel load per 8,4,1, wet basis, lb (kg)
MC_{FLn}	Average fuel moisture of test fuel piece, n , in test fuel load % dry basis
n	individual test fuel pieces that comprise the test fuel load, as applicable

Sample calculation

Data

M_{FLnwb}	14,80 lbs
MC_{FLn}	23,13 %
n	
M_{FLdb}	12,02 lbs

Equation 9,2 (2) $$M_{SUdb} = \sum (M_{SUnwb})\,(100)/(100 + MC_{SUn}))$$

Nomenclature

M_{SUdb}	Weight of startup fuel, dry basis, lb (Kg)
M_{SUnwb}	Weight of each start-up fuel pieces, n, per 8,5,7, wet basis, lb (Kg)
MC_{SUn}	Average fuel moisture of start-up fuel piece, n % bry basis
n	individual startup fuel pieces, as applicable

Sample calculation

Data

M_{SUnwb}	4,40 lbs
MC_{SUn}	20 %
n	
M_{SUdb}	3,67 lbs

Equation 9,2 (3) $$M_{kdb} = (M_{kwb})(100)/(100 + MC_k)$$

Nomenclature

M_{kdb} Weight of kindling, dry basis lb (kg)

M_{kwb} Weight of kindling per 8,5,6, wet basis, lb (kg)

MC_k Average moisture of kindling % dry basis

Sample calculation

Data

M_{kwb}	1,90 lbs
MC_k	9,00 %
M_{kdb}	1,74 lbs

Equation 9,2 (4) $$M_{FREHdb} = M_{RSUBdb} + M_{FLEHdb}$$

Nomenclature

M_{FREHdb} Total weight of all remaining fuel at end of high fire test run, lb (kg)

M_{RSUBDb} Weight of risidual start-up fuel bed when high fire test load added, lb(kg)

M_{FLEHdb} Weight of unburned portion of test fuel load at the end of the high fire test run, lb (kg)

Sample calculation

Data

M_{RSUBDb}	2,10 lbs
M_{FLEHdb}	1,40 lbs
M_{FREHdb}	3,50 lbs

Equation 9,2 (5) $$M_{TFBHdb} = M_{Kdb} + M_{SUdb} + M_{FLdb} - M_{FREHdb}$$

Nomenclature

M_{TBFHdb}	Total weight of all fuel burned during high fire test run lb (kg), dry basis
M_{FREHdb}	Total weight of all remaining fuel at end of high fire test run, lb (kg)
M_{FLdb}	Weight of test fuel load, dry basis lb (kg)
M_{SUdb}	Weight of startup fuel, dry basis, lb (Kg)
M_{kdb}	Weight of kindling, dry basis lb (kg)

Sample calculation

Data

M_{FREHdb}	3,50	lbs
M_{FLdb}	12,02	lbs
M_{SUdb}	3,67	lbs
M_{kdb}	1,74	lbs
M_{TBFHdb}	13,93	lbs

Equation 9,2 (6) $$BR_H = 60(M_{FLdb} - M_{FLEHdb})/\theta_{H1}$$

Nomenclature

BR_H	Dry burn rate for high fire test run, from time when test fuel load added to end of test run
θ_{H1}	Total duration of high fire test run, from time when test fuel load is added to end of test r
M_{FLdb}	Weight of test fuel load, dry basis lb (kg)
M_{FLEHdb}	Weight of unburned portion of test fuel load at the end of the high fire test run, lb (kg)

Sample calculation

Data

θ_{H1}	74	min
M_{FLdb}	12,02	lbs
M_{FLEHdb}	1,40	lbs
BR_H	3,91	kg/hr

For low and medium burn fire test run

Equation 9,2 (7) $$M_{TFBdb} = M_{FLdb} - M_{FREdb}$$

Nomenclature

M_{TFBdb}	Total weight of fuel burned during low or medium fire test run, lb (kg),dry basis
M_{FREdb}	Weight of remaining fuel at end of low or medium fire test run, lb (kg)
M_{FLdb}	Weight of test fuel load, dry basis lb (kg)

Sample calculation

Data

M_{FREdb}	0,00	lbs
M_{FLdb}	14,05	lbs
M_{TFBdb}	14,05	lbs

Equation 9,2 (8) $$BR = 60(M_{MTBdb})/\theta$$

Nomenclature

BR	Dry burn rate for low and medium fire test run. lb/hr (kg/hr)
θ	Total duration of low or medium fire test run, min.
M_{TFBdb}	Total weight of fuel burned during low or medium fire test run, lb (kg),dry basis

Sample calculation

Data

θ	363	min
M_{TFBdb}	14,05	lbs
BR_H	1,05	kg/hr

For high test run
Equation 9,2 (9) $$PM_{RH} = 60(E_{TH}/\theta_{H2})$$

Nomenclature

PM_{RH}	Paticulate emission rate for high fire test run, gr/hr
E_{TH}	Total particulate emissions for high fire test run including kindling and start-uo
θ_{H2}	Total test duration of high fire test run, from ignition of kindling to end of test run

Sample calculation

Data

E_{TH}	7	gr
θ_{H2}	90,00	min
PM_{RH}	4,50	kg/hr

Equation 9,2 (10) $$PM_{FH} = E_{TH}/M_{TFBHdb}$$

Nomenclature

PMF_H	Paticulate emission rate for high fire test run, gr/hr

Sample calculation

Data

E_{TH}	7	gr
M_{TFBHdb}	13,93	dry lb
PM_{RH}	1,07	gr/dry kg

for high fire test run
Equation 9,2 (11)

$$PM_{btuH} = E_{TH} / (M_{TFBHdb} * (HHV)\left(\frac{n_1}{100}\right)) * (10^6)$$

Nomenclature

PM_{btuH}	Particulate per heat output unit for high fire test run, lb/ MMbtu
HHV	Higher heating value of test fuel, dry basis, btu/lb
n_r	CSA B415,1 overall Efficiency, HHV (hot to hot)

Sample calculation

Data

E_{TH}	6,8	gr
M_{TFBHdb}	13,93	dry lb
HHV	8690	btu/lb
n_r	68,87%	
PM_{btuH}	0,1786	lb/Mmbtu

Equation 9,2 (12)

$$PM_R = 60(E_T/\theta)$$

Nomenclature

PM_R	Paticulate emission rate for low or medium fire test run, gr/hr
E_T	Total particulate emission for low or medium fire test run, from ASTME 2515 (g)
θ	Total duration of low or medium fire test run, min.

Sample calculation

Data

E_T	2	gr
θ	363	min
PM_{RH}	0,38	gr/hr

Equation 9,2 (13) $$PM_F = E_T / M_{TFBdb}$$

Nomenclature

PM_F Paticulate emission factor rate for low or medium fire test run, gr/dry kg

Sample calculation

Data

E_T	2,3	gr
M_{TFBdb}	14,05	dry lb
PM_F	0,36	gr/dry kg

for high fire test run
Equation 9,2 (14) $$PM_{btu} = E_T / (M_{TFBdb}(HHV)(\frac{n_r}{100})) * (10^6)$$

Nomenclature

Pmbtu Particulate per heat output unit for low and medium test run, lb/ MMbtu
HHV Higher heating value of test fuel, dry basis, btu/lb
n_r CSA B415,1 overall Efficiency, HHV (hot to hot)

Sample calculation

Data

E_{TH}	2,3	gr
M_{TFBHdb}	14,05	dry lb
HHV	8690	btu/lb
n_r	72,60%	
PM_{btuH}	0,0577	lb/Mmbtu

Volume of gas sample corrected to dry standard conditions ($V_{m(std)}$)

Equation used

ASTM 2515, equation 6

$$V_{m\,(std)} = K_1 V_m Y \left[\frac{P_{bar} + \left(\frac{\Delta H}{13.6}\right)}{T_m}\right]$$

Nomenclature

$V_{m\,(std)}$	Volume of gas sample , corrected to standard conditions, $dscm^3$ (dscf)
K_1	17.64 R/in Hg
V_m	Volume of gas sample
Y	DGM calibration factor
P_{bar}	Barometric pressure mmHg (in Hg)
ΔH	Average pressure at the outlet of the dry gas meter mm water (in. Water)
T_m	Absolute average dry gas meter temperature K (R)

Sample calculation

Data

V_m	68,37	dcf
Y	0,9873	
P_{bar}	30,25	in Hg
ΔH	-0,9145	in Hg
T_m	541,7	R

Calculation

$V_{m(std)}$	64,49	dscf

Calculation based of train 2 data Low fire

Total amount of particulate matter collected (m_n)

Equation used

ASTM 2515, equation 12

$$m_n = F_1 + F_2 + \Delta PF$$

Nomenclature

m_n	Total amount of particulate matter collected, mg
F_1	Particulate matter collected on front filter, mg
F_2	Particulate matter collected on second filter, mg
ΔPF	Post-test weight gain of probe and filter holder assembly, mg

Sample calculation

Data

F_1	0	g
F_2	0,000	g
ΔPF	0,003	g

Calculation

m_n	2,200	mg

Calculation based of train 2 data Low fire

Particulate concentration (C_S)

Equation used

ASTM 2515, equation 13

$$C_S = (0{,}001\ g/mg) \times \left(\frac{m_n}{V_{m\,(std)}}\right)$$

Nomenclature

C_S	Concentration of particulate matter in stack gas or dilution tunnel, dry basis, corrected to standard conditions, g/dsm^3 (g/dscf)
m_n	Total amount of particulate matter collected in the sampling train, mg
$V_{m(std)}$	Volume of gas sample measured corrected to dry standard conditions, dsm^3 (dscf)

Sample calculation

Data

m_n	2,200 mg
$V_{m(std)}$	64,49 dscf

Calculation

C_s	0,000034 g/dscf

Calculation based of train 2 data Low fire

Particulate concentration for room air (C_r)

Equation used

ASTM 2515, equation 14

$$C_r = (0{,}001\ g/mg) \times \left(\frac{m_r}{V_{mr\,(std)}}\right)$$

Nomenclature

C_r	Concentration of particulate matter in room air, dry basis, corrected to standard conditions, g/dsm^3 (g/dscf)
m_r	Total amount of particulate matter collected in the sampling train, mg
$V_{mr(std)}$	Volume of room air sample measured corrected to dry standard conditions, dsm^3 (dsc

Sample calculation

Data

m_r	0,000 mg
$V_{mr(std)}$	82,73 dscf

Calculation

C_r 0,000000 g/dscf

Calculation based of train 2 data low

Adjustment factor for alternative pitot tube placement (FP)

Equation used

ASTM 2515, equation 1

$$F_P = \frac{V_{strav}}{V_{scent}}$$

Nomenclature

V_{strav}	Average gas velocity caclulated after the Pitot tube traverse
V_{scent}	Average gas velocity at the center of the dilution tunnel cacluated after the multi-point Pitot traverse
F_P	Adjustment factor for center of tunnel pitot tube placement

Sample calculation

Data

V_{strav}	0,232414498
V_{scent}	0,245965377

Calculation

F_P	0,944907

Average dilution tunnel gas velocity (V_S)

Equation used

ASTM 2515, equation 9

$$V_S = F_p K_P C_P \left(\sqrt{\Delta P}\right)_{avg} \sqrt{\frac{T_S}{P_S M_S}}$$

Nomenclature

V_S	Average dilution tunnel gas velocity, m/s (ft/s)
K_P	Pitot tube constant For the metric units: $34.97\ m/sec \left[\frac{\left(\frac{g}{g-mole}\right)(mm\ Hg)}{(°K)(mm\ H_2O)}\right]^{1/2}$ For English units: $85.49\ ft/sec \left[\frac{\left(\frac{lb}{lb-mole}\right)(in\ Hg)}{(°R)(in\ H_2O)}\right]^{1/2}$
C_P	Pitot tube coefficient (use 0.99 for standard pitot tube, 0.84 may be used for S-type tubes constructed according to Method 2 specifications)
F_P	Pitot tube correction factor
$\left(\sqrt{\Delta P}\right)_{avg}$	Average square root of each individual velocity head (ΔP)
P_{bar}	Barometric pressure at measurement site, mm H_2O (in. H_2O)
P_g	Stack static pressure, mm Hg (in. Hg)
P_S	Absolute dilution tunnel static gas pressure, mm Hg (in. Hg), or $P_{bar} + P_g$
M_S	Molecular weight of dilution tunnel gas, wet basis, g/g-mole (lb/lb-mol) may be assumed to be 28.78 or 29 for CSA B415
t_S	Dilution tunnel temperature, °C (°F)
T_S	Absolute dilution tunnel temperature, °K (°R), or 273 + t_s for metric units, 460 + t_s for English units

Sample calculation

Data

K_P	85,49	
C_P	0,99	
F_P	0,945	
$\left(\sqrt{\Delta P}\right)_{avg}$	0,2497	in $H_20^{1/2}$
P_{bar}	30,25	in Hg
P_g	0,25	in H_20
P_S	30,27	in Hg
M_S	28,78	lb/lb-mol
t_S	98,48	F
T_S	558,48	R

Calculation

V_S	15,9883	ft/s

Calculation based of data low

Average dilution tunnel gas flow rate (Qstd)

Equation used

ASTM 2515, equation 3

$$Q_{std} = 60(1 - B_{WS})V_S A\left(\frac{T_{std}}{T_S}\right)\left(\frac{P_S}{P_{std}}\right)$$

Nomenclature

Q_{std}	Total gas flow rate corrected to dry standard conditions, dsm^3/min (dscf/min)
60	Conversion factor minutes per hour
B_{WS}	Water vapour in the dilution tunnel stream, proportion by volume (may be assumed to be 2%)
V_S	Average dilution tunnel gas velocity, m/s (ft/s)
A	Cross-sectional area of dilution tunnel, m^2 (ft^2)
T_{std}	Standard absolute temperature, 293 °K (528°R)
T_S	Absolute average dilution tunnel temperature, °K (°R), or 273 + t_s for metric units, 460 + t_s for English units
t_S	Dilution tunnel temperature, °C (°F)
P_S	Absolute dilution tunnel static gas pressure, mm Hg (in. Hg), or P_{bar} + P_g
P_{bar}	Barometric pressure at measurement site, mm Hg (in. Hg)
P_g	Dilution tunnel static pressure, mm Hg (in. Hg)
P_{std}	Standard absolute pressure, 760 mm Hg (29.92 in. Hg)

Sample calculation

Data

B_{WS}	0,02	
V_S	15,988	
A	0,196	ft^2
T_{std}	528	R
T_S	558,48	R
P_S	30,272	in Hg
P_{std}	29,92	in Hg

Calculation

Q_{std}	176,57	dscf/min

Calculation based of data low

Particulate emission rate (E)

Equation used

$$E = (C_S - C_r)Q_{std}$$

Nomenclature

E	Particulate emission rate, g/hr
C_S	Concentration of particulate matter in stack gas or dilution tunnel gas, dry basis corrected to standard conditions, g/dscm^3 (g/dscf)
C_r	Concentration of particulate matter in room air, g/dscm^3 (g/dscf)
Q_{std}	Total gas flow rate, dry basis corrected to standard conditions, dsm^3/min (dscf/min)

Sample calculation

Data

C_S	0,000034	g/dscf
C_r	0,000000	g/dscf
Q_{std}	176,57	dscf/min

Calculation

E	0,01	g/min
E	0,36	g/h

Calculation based on train 2 data low

Total particulate emission rate (E_T)

Equation used

ASTM 2515, equation 15

$$E_T = (C_S - C_r)Q_{std}\theta$$

Nomenclature

E_T	Total particulate emission, g
C_S	Concentration of particulate matter in stack gas or dilution tunnel gas, dry basis corrected to standard conditions, g/dscm^3 (g/dscf)
C_r	Concentration of particulate matter in room air, g/dscm^3 (g/dscf)
Q_{std}	Total gas flow rate, dry basis corrected to standard conditions, dsm^3/min (dscf/min)
θ	Total sampling time, min

Sample calculation

Data

C_S	0,000034	g/dscf
C_r	0,000000	g/dscf
Q_{std}	176,57	dscf/min
θ	363	min

Calculation

E	2,19	g

Calculation based on train 2 data Low

Average gas velocity in dilution tunnel during each min interval, i, of the test run

Equation used

ASTM 2515, equation 10

$$v_{si} = F_p K_p C_p \sqrt{\Delta p_i} \sqrt{\frac{T_{si}}{P_s M_s}}$$

Nomenclature

v_{si}	Average gas velocity in dilution tunnel during each min interval, i of the test run m/sec (ft/sec)
F_P	Pitot tube correction factor
K_P	Pitot tube constant For the metric units: $34.97\ m/sec \left[\frac{\left(\frac{g}{g-mole}\right)(mm\ Hg)}{(°K)(mm\ H_2O)}\right]^{1/2}$ For English units: $85.49\ ft/sec \left[\frac{\left(\frac{lb}{lb-mole}\right)(in\ Hg)}{(°R)(in\ H_2O)}\right]^{1/2}$
C_P	Pitot tube coefficient (use 0.99 for standard pitot tube, 0.84 may be used for S-type tubes constructed according to Method 2 specifications)
Δp_i	interval, i, of the test run
T_{Si}	Absolute average gas temperature in the dilution tunnel during the ith minutes
P_S	Absolute dilution tunnel static gas pressure, mm Hg (in. Hg), or $P_{bar} + P_g$
M_S	Molecular weight of dilution tunnel gas, wet basis, g/g-mole (lb/lb-mol) may be assumed to be 28.78

Sample calculation

Data

i=1		**i=2**	
F_P	0,945	F_P	0,945
K_P	85,49	K_P	85,49
C_P	0,99	C_P	0,99
Δp_i	0,061 in H_20	Δp_i	0,061 in H_20
T_{Si}	606,0 R	T_{Si}	617,4 R
P_S	30,27 in Hg	P_S	30,27 in Hg
M_S	28,78 lb/lb-mol	M_S	28,78 lb/lb-mol

Calculation

i=1		**i=2**	
v_{si}	16,46 ft/sec	v_{si}	16,66 ft/sec

Percent of proportional sampling rate (PR)

Equation used

B415, equation 13.1

$$PR = \left(\frac{\theta V_{mi(std)} V_S T_m T_{Si}}{\theta_i V_m V_{Si} T_{mi} T_S}\right) \times 100$$

Nomenclature

PR	Percent of proportional sampling rate (%)
θ	Total sampling time, min
θ_i	Time of interval, 1 min
V_m	Volume of gas sample measured by the DGM, dsm^3 (dscf)
$V_{mi(std)}$	Volume of gas sample measured by the digital mass flow controller during the ith 1 minutes interval, dsm^3 (dscf)
V_S	Average gas velocity in the dilution tunnel, ft/min
V_{Si}	Average gas velocity in the dilution tunnel during the ith 10 minutes interval, ft/min
T_m	Absolute average digital mass flow controller temperature, K (R)
T_{mi}	Absolute average digital mass flow controller temperature during the ith 1 minutes
T_S	Absolute average gas temperature in the dilution tunnel, K (R)
T_{Si}	Absolute average gas temperature in the dilution tunnel during the ith 1 minutes

Sample calculation

Data

train =1			train =2		
θ	363	min	θ	363	min
θ_i	1	min	θ_i	1	min
V_m	68,04	dcf	V_m	64,51	dcf
$V_{mi(std)}$	0,187	cuft	$V_{mi(std)}$	0,1789	cuft
V_S	15,99	ft/sec	V_S	15,99	ft/sec
V_{Si}	16,466	ft/sec	V_{Si}	16,466	ft/sec
T_m	541,2	R	T_m	541,7	R
T_{mi}	541,62	R	T_{mi}	542,41	R
T_S	558,48	R	T_S	558,48	R
T_{Si}	606,0	R	T_{Si}	606,0	R

Calculation

train=1		**train=2**	
PR	104,8 %	PR	105,9 %

Filter face velocity check

Equation used

$$FV_{max} = \frac{V_{mL}}{1} \times \frac{1}{F_A}$$

Nomenclature

FV_{max}	Maximum filter face velocity during the test run, m/min (ft/min)
V_{mL}	Largest 1 minute interval metered gas volume value recorded during the test run, dm^3 (dcf)
F_A	Filter area exposed to gas sample during train operation, m2 (ft^2)

Sample calculation

Data

V_{mL}	0,175	dcf
F_A	0,0116	ft^2

Calculation

FV_{max}	15,07	ft/min

Dual train precision

Equation used

$$\frac{Train\ 1 - average\ train\ 1\ and\ train\ 2}{average\ train\ 1\ and\ train\ 2} \times 100 \leq 7.5\%$$

Nomenclature

Dual train precision	Deviation between emission's train 1 and 2
Train 1	Total emission for train 1
Train 2	Total emission for train 2

Sample calculation

Data

Train 1	2,45 g
Train 2	2,19 g

Calculation

Dual train precision	5,68 %

Analyzer drift checks

Equation used

$$Drift = \frac{\Delta R}{span} \times 100$$

Nomenclature

Drift	The change in analyzer response to calibration gas over the duration of the test run
ΔR	The difference between the analyzer response at the end of the test run and the
Span	The upper limit of the instrument range, ppmv or %

Sample calculation

Data

ΔR	0,015 %
Span	5 %

Calculation

Drift	0,30 %

Calculated with CO concentration values.

APPENDIX 12: Volume calculations

FIREBOX WIDTH

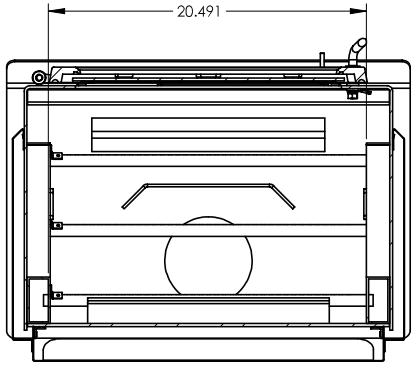

SECTION C-C
SCALE 1 : 8

FIREBOX VOLUME CALCULATION:

SECTION AREA= 1/2(9.755+11.577)x11.505=122.712 sq.in.
FIREBOX VOLUME=122.712 x 20.491=2514.5 cu.in.=1.455 cu.ft.

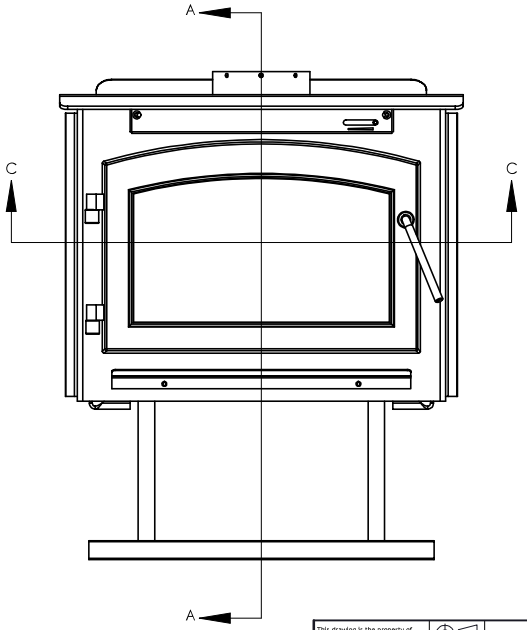

DIMENSIONS OF FIREBOX SECTION

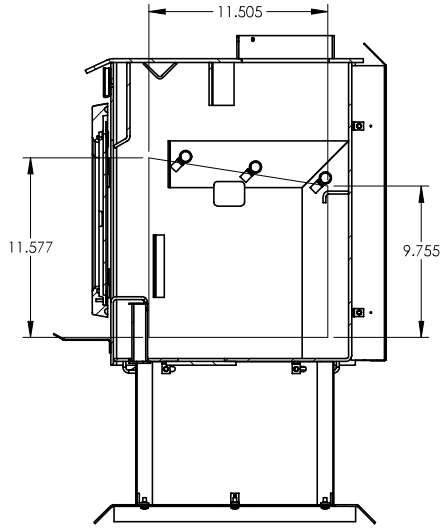

SECTION A-A
SCALE 1 : 8

This drawing is the property of Wolf Steel LTD. or AAC. It is not to be reproduced nor used in any manner without our consent. All rights are reserved.

DATE FORMAT MM/DD/YY

WOLF STEEL

UNLESS OTHERWISE NOTED OR DEPICTED ALL DIMENSIONS ARE OUTSIDE IN INCHES ALL SURFACES ARE CONSIDERED CLASS "D"

TOLERANCES:
DIMENSIONS ±0.031 RADIUS ±0.062
REFERENCE DIMENSIONS ±0.062 ANGLES ±2°

TITLE: ASSEMBLY, 2100-1				MODEL: 2100-1	DRAWING:	2100-1
MATERIAL:			174.732 LBS	THICKNESS:	ISSUE DATE:	UNRELEASED
FINISH:		PROJECT LEAD: P HODGES	CN#:	SCALE: 1:5	SHEET 2 OF 2	DRAWN BY: UNRELEASED
REVISION:	REV DATE:	REV NOTE:				CHECKED BY: UNRELEASED

APPENDIX 13: Operating instruction

Operating instruction for High burn rate Cord wood method ALT-125, ASTME3053

- Start the fire with approximately 4.2 lbs. of startup fuel, 2 lbs. of kindling.
- After one minute close the door.
- When left approximately 2.1 lbs. from the startup load, the high burn rate load can be inserted.
- The high bur rate load can be up to 15lbs. open the door, load the stove with high burn load.
- Close the door right after loading
- Optional fan is set at high position and operate with a thermodic located at the back of the firebox.

Operating instruction for Medium burn rate Cord wood method ALT-125, ASTME3053

- From the high burn rate coal bed, when 2 lbs. left, the load can be inserted in the firebox.
- open the door
- Insert the 17 lbs. load in the wood heater
- Close the door right after loading
- Keep the combustion air damper fully open for 14 minutes, then gradually close to air damper to the medium setting
- At 15 minutes close the combustion air damper to the medium setting.
- No fan for the medium setting.

Operating instruction for Low burn rate Cord wood method ALT-125, ASTME3053

- From the high burn rate coal bed, when 2.1 lbs. left, the load can be inserted in the firebox.
- open the door
- Insert the 17.3 lbs. load in the wood heater
- Close the door right after loading
- Keep the combustion air damper fully open for 13 minutes, then gradually close to air damper to the minimum setting
- At 15 minutes fully close the combustion air damper (lowest setting).
- Fan can be turned On after 60 min at the minimum setting.

APPENDIX 14: Drawing Air flow pattern

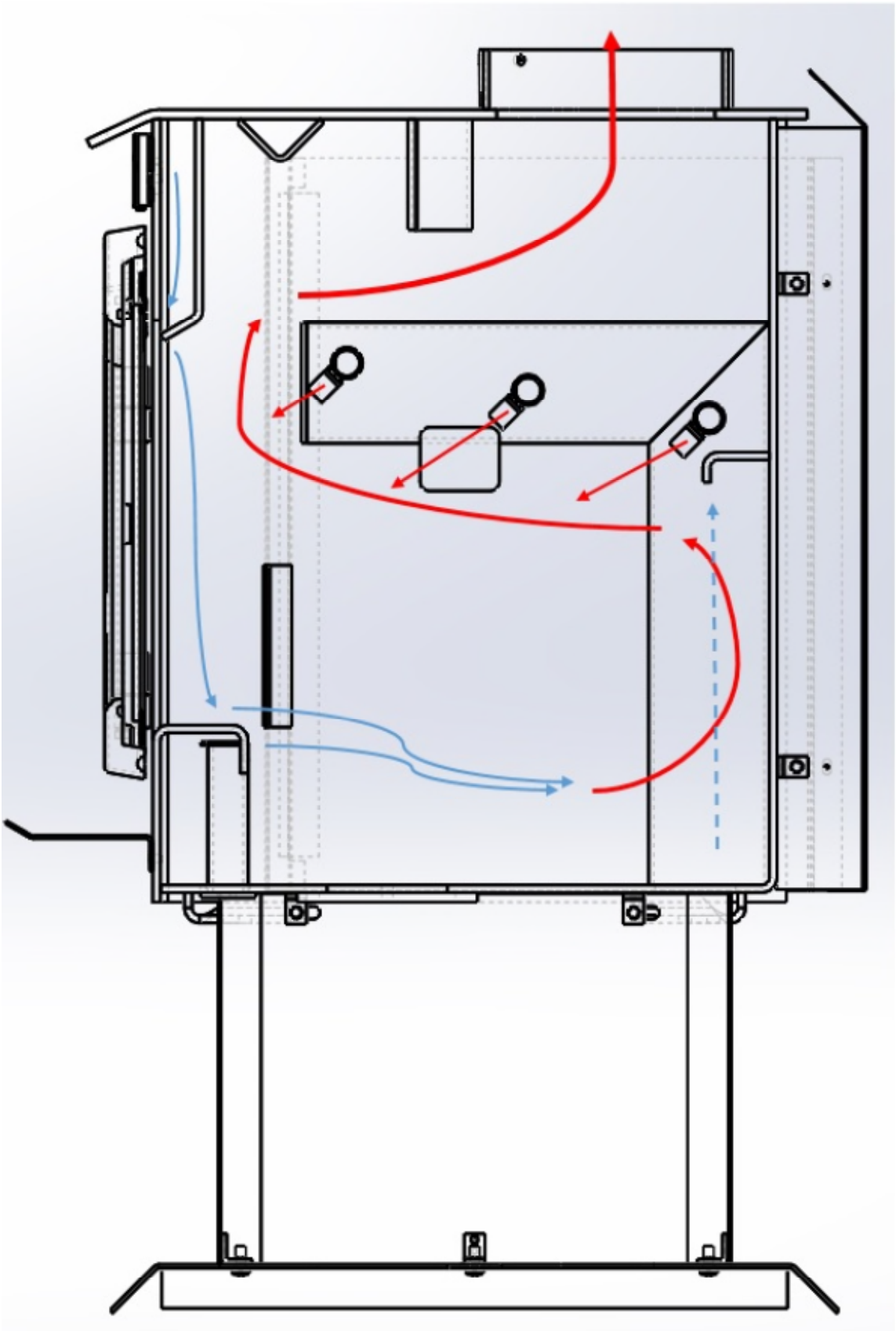

APPENDIX 15: Application for wood stove program

U.S. ENVIRONMENTAL PROTECTION AGENCY (EPA)
2015 Standards of Performance for New Residential Wood Heaters, New Residential Hydronic Heaters and Forced-Air Furnaces Application
40 CFR PART 60 SUBPARTS AAA AND QQQQ

Disclaimer: The statutory provisions and the EPA regulations described in this document contain legally binding requirements. This document is not a substitute for those provisions or regulations, nor is it a regulation itself. In the event of a discrepancy, please refer to 40 CFR PART 60 Subparts AAA AND QQQQ, Sections 60.533(b), 60.5475(b), and Appendix A–8. This document may be revised periodically without public notice. If you have additional questions, please contact Rafael Sanchez at 202-564-7028 or via email at sanchez.rafael@epa.gov.

Contents

Application for US EPA certification 2

Wood Burning Heaters 7

I. Test Method 28R for Certification and Auditing of Wood Heaters 7

A. *Summary Results – Adjustable Wood Burning Heaters* 7

B. Summary Results – Single Burn Rate Wood Burning Heaters ..... **Erreur ! Signet non défini.**

C. Summary Results – Pellet Heaters ..... **Erreur ! Signet non défini.**

Hydronic Heaters ..... **Erreur ! Signet non défini.**

II. Test Method 28WHH for Measurement of Particulate Emissions and Heating Efficiency of Wood-Fired Hydronic Heating Appliances **Erreur ! Signet non défini.**

Table 1A. Data Summary Part A ..... **Erreur ! Signet non défini.**

..... **Erreur ! Signet non défini.**

Table 1B. Data Summary Part B ..... **Erreur ! Signet non défini.**

Table 1C: Additional (Hangtag) Information ..... **Erreur ! Signet non défini.**

Table 2. Annual Weighting ..... **Erreur ! Signet non défini.**

III. Test Method 28WHH for Certification of Cord Wood-Fired Hydronic Heating Appliances With Partial Thermal Storage ... **Erreur ! Signet non défini.**

Table 2A. Data Summary Part A ..... **Erreur ! Signet non défini.**

Table 2B. Data Summary Part B ..... **Erreur ! Signet non défini.**

Table 3C. Data Summary Part D ..... **Erreur ! Signet non défini.**

Forced-Air Furnaces ..... **Erreur ! Signet non défini.**

IV. Forced-Air Furnaces ..... **Erreur ! Signet non défini.**

APPLICATION FOR A CERTIFICATE OF COMPLIANCE PURSUANT TO 40 CFR PART 60 SUBPARTS AAA AND QQQQ

2015 STANDARDS OF PERFORMANCE FOR NEW RESIDENTIAL WOOD HEATERS, NEW RESIDENTIAL HYDRONIC HEATERS AND FORCED-AIR FURNACES

GENERAL INFORMATION

Manufacturer's Name: Wolf Steel ltd

Heater Type (Circle One):	Adjustable Burn Rate Wood Heater	Pellet Stove	Single Burn Rate Heater	Hydronic Heater	Forced Air Furnace	Other:
Hydronic Heater Type (Circle One):	Traditional	Full Storage	Partial Storage	Indoor/Outdoor	Other:	
Forced-Air Furnace Type (Circle One):	Small (less than 65,000 BTU/hr heat output)		Large (greater than 65,000 BTU/hr heat output)		Other:	
Fuel Tested:	Crib	Pellet	Cordwood	Wood Chips	Other:	

Test Method(s): ALT-125 ; AMSTE3053 ; ASTME2515	**Catalyst: no**

Model Name and Design Number (The model name and design number must clearly distinguish one model from another. The name and design number cannot include the EPA symbol or logo or name or derivatives such as "EPA): Timberwolf 2100, Napoleon S15.

Physical Address (Street number and Address, not P.O. Box): 9 NAPLOEON ROAD	**Mailing Address: 9 NAPLOEON ROAD**

City: BARRIE	**State: ON**	**ZIP Code: L4M 0G8**
Phone: 705-721-1212	**Email: PHODGES@NAPOLEONPRODUCTS.COM**	**Website: WWW.NAPOLEONPRODUCTS.COM**

EPA Submission Date of 30 day Notice:

MANUFACTURER'S AUTHORIZED REPRESENTATIVE INFORMATION

Name: PAUL HODGES

Position/Title: ENGINEERING MANAGER – EARTH R&D

Address: 9 NAPLOEON ROAD

City: BARRIE	**State: ON**	**ZIP Code: L4M 0G8**
Phone: 705-721-1212	**E-mail:PHODGES@NAPOLEONPRODUCTS.COM**	**Website: WWW.NAPOLEONPRODUCTS.COM**

Remarks:

APPLICATION FOR A CERTIFICATE OF COMPLIANCE PURSUANT TO 40 CFR PART 60 SUBPARTS AAA AND QQQQ

2015 STANDARDS OF PERFORMANCE FOR NEW RESIDENTIAL WOOD HEATERS, NEW RESIDENTIAL HYDRONIC HEATERS AND FORCED-AIR FURNACES

EPA-APPROVED TEST LABORATORY		
Name of Test Laboratory: **Polytests Services inc.**		
Name of Person Authorized or Responsible for Conducting Compliance Test: Danick Power		
Position/Title: VP operation		
Address: 695-B Gaudette,		
City: St-Jean-sur-Richelieu	**State: Quebec, Canada**	**ZIP Code: J3B 7S7**
Phone: 450 741-3636	**Email: dpower@polytests.com**	**Website: www.polytests.com**
Remarks:		

EPA-Approved Third Party Certifier		
Name of Certifier Entity: Omni		
Name of Person Authorized or Responsible for Reviewing Test Report and/or Issuing Certification of Conformity: Ken Morgan		
Position/Title: Project Manager		
Address: 13327 NE Airport Way		
City: Portland	**State: OR**	**ZIP Code: 97230**
Phone: 503 643-3788	**Email:** **kmorgan@omni-test.com**	**Website:** **Omni-test.com**
Remarks:		

COMPLIANCE STATEMENTS AND ACKNOWLEDGEMENTS – SECTIONS 60.533(B) AND 60.5475(B)

INSTRUCTIONS: PLEASE READ THE BELOW STATEMENTS AND AFFIRMATIONS AND ADDRESS ACCORDINGLY.

FOR EMISSIONS DATA SUMMARY TABLES SEE ATTACHMENTS

1. Engineering Drawings Statement

Engineering drawings and specifications of components that may affect emissions (including specifications for each component listed in paragraphs (k)(2), (3) and (4) of 60.533(b) and 60.5475(b). Manufacturers may use assembly or design drawings that have been prepared for other purposes, but must designate on the drawings the dimensions of each component listed in paragraph (k) of this section. Manufacturers must identify tolerances of components listed in paragraph (k)(2) of 60.533(b) and 60.5475(b) that are different from those specified in that paragraph, and show that such tolerances cannot reasonably be anticipated to cause wood heaters in the model line to exceed the applicable emission limits. The drawings must identify how the emission-critical parts, such as air tubes and catalyst, can be readily inspected and replaced.

All components include dimensions and production tolerances which meet or exceed the prescribed requirements and facilitate inspection. Replacement procedures are clearly documented in service kits.

2. Firebox Statement Requirement

A statement whether the firebox or any firebox component (including the materials listed in paragraph (k)(3) of 60.533(b) and 60.5475(b) will be composed of material different from the material used for the firebox or firebox component in the wood heater on which certification testing was performed, a description of any such differences and demonstration that any such differences may not reasonably be anticipated to adversely affect emissions or efficiency.

No – the firbox and any firebox component will not be made of different materials than what was used in the certification testing.

3. CBI

Clear identification of any claimed confidential business information (CBI). Submit such information under separate cover to the EPA CBI Office; Attn: Residential Wood Heater Compliance Program Lead, 1200 Pennsylvania Ave., NW, Room 7138, MS:2227A, Washington, DC 20460. **Note that all emissions data, including all information necessary to determine emission rates in the format of the standard, cannot be claimed as CBI.**

CBI was sent to EPA Testing Laboratory Polytest INC.

4. Valid Certification Statement

All documentation pertaining to a valid certification test, including the complete test report and, for all test runs: Raw data sheets, laboratory technician notes, calculations and test results. Documentation must include the items specified in the applicable test methods. Documentation must include discussion of each test run and its appropriateness and validity, and must include detailed discussion of all anomalies, whether all burn rate categories were achieved, any data not used in the calculations and, for any test runs not completed, the data collected during the test run and the reason(s) that the test run was not completed and why. The burn rate for the low burn rate category must be no greater than the rate that an operator can achieve in home use and no greater than is advertised by the manufacturer or retailer. The test report must include a summary table that clearly presents the individual and overall emission rates, efficiencies and heat outputs. Submit the test report and all associated required information, according to the procedures for electronic reporting specified in § 60.537(f) and 60.5475(f).

Yes all requirements in the above section is covered as per the requirements in the test report.

5. Warranties

A copy of the warranties for the model line, which must include a statement that the warranties are void if the unit is used to burn materials for which the unit is not certified by the EPA and void if not operated according to the owner's manual.

All warranty data is included in the manual and includes the necessary statements as per this section.

6. Q/A Statement

A statement that the manufacturer will conduct a quality assurance program for the model line that satisfies the requirements of paragraph (m) of this section.

Yes, included with the report is Wolf Steel's SOP on quality assurance inspection program.

7. Laboratory Sealing of Unit

A statement describing how the tested unit was sealed by the laboratory after the completion of certification testing and asserting that such unit will be stored by the manufacturer in the sealed state until 5 years after the certification test.

The unit has been sealed at the testing facility by the technicians performing the test. There is metal banding encasing the unit preventing the door from being opened and modifications made. The unit is clearly permanently labeled as the EPA test unit.

8. Statements that the wood heaters manufactured under this certificate will be—

(i) Similar in all material respects that would affect emissions as defined in § 60.531 to the wood heater submitted for certification testing, and labeled as prescribed in § 60.536 and 60.5478.

(ii) Accompanied by an owner's manual that meets the requirements in § 60.536 and 60.5478. In addition, a copy of the owner's manual must be submitted to the Administrator and be available to the public on the manufacturer's web site.

Yes, the wood heater manufactured will be of similar material to the wood heater tested. Each unit will be accompanied by its owner's manual and will be available on the Timberwolf and Napoleon websites.

9. Third Party Certification Statement

A statement that the manufacturer has entered into contracts with an approved laboratory and an approved third-party certifier that satisfy the requirements of paragraph (f) of this section.

Yes, Wolf Steel has entered into a contract with Polytest as an approved EPA laboratory and Omni as a third party certifier.

10. Approved laboratory/third party Statement

A statement that the approved laboratory and approved third-party certifier are allowed to submit information on behalf of the manufacturer, including any claimed to be CBI.

Yes, both the approved laboratory and third party certifier have been given permission to submit information on behalf of Wolf Steel.

11. Manufacturer's Website Certification Test Reports Availability Statement

A statement that the manufacturer will place a copy of the certification test report and summary on the manufacturer's web site available to the public within 30 days after the Administrator issues a certificate of compliance.

We will place a copy of the certification test and summary on the Timberwolf and Napoleon websites within 30 days of the certificate.

12. Transferability Acknowledgement Statement

A statement of acknowledgment that the certificate of compliance cannot be transferred to another manufacturer or model line without written approval by the Administrator.

We acknowledge that the certificate of compliance cannot be transferred to another manufacturer or model line without notification and written approval by the administrator.

13. Statement about Selling Wood Heaters without an EPA Certificate

A statement acknowledging that it is unlawful to sell, distribute or offer to sell or distribute an affected wood heater without a valid certificate of compliance.

We acknowledge that we cannot sell, distribute or offer to sell the wood heater without a valid certificate of compliance.

Print Name and Title: PAUL HODGES, ENGINEERING MANAGER – HEARTH R&D	**Date: 28th March 2019.**

Signature of responsible representative of the manufacturer certifying the accuracy of the above statements:

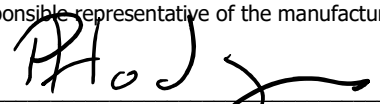

The authorized or responsible party whose signature is above is certifying that the manufacturer has complied with and will continue to comply with all requirements of the 2015 NSPS for compliance certification and that the manufacturer remains responsible for compliance regardless of any error by the test laboratory or third-party certifier.

Attachments

Instructions: Please complete the section applicable to your certification request. You may substitute your own data tables in lieu of the ones shown below provided that all the information is captured.

WOOD BURNING HEATERS

I. Test Method 28R for Certification and Auditing of Wood Heaters

A. *SUMMARY RESULTS – ADJUSTABLE WOOD BURNING HEATERS*

WEIGHTED AVERAGE SUMMARY

Model name / number	2100		
Usable Firebox volume	1,45		
Convection air Fan (no, Standard, option)	OPTION		
average for each test run category	L	M	H
burn rate kg/h DB	1,05	1,13	3,91
PM Emission rate - g/h	0,38	1,29	4,50
Co emission rate - g/h	63,03	66,75	21,53
Overall Efficiency - CSA B 415,1			
% HHV Basis	72,6%	70,7%	68,9%
% LHV Basis	78,1%	76,1%	74,1%
Heat output - Btu/hr	14582	15299	30042
Category weighting	0,4	0,4	0,2

WEIGHTED AVERAGE FINAL RESULTS

ASTM E 3053 Weighted averages			
PM Emission Rate - g/h	1,57		
CO Emission Rate g/h	56,2		
Overall Efficiency - CSA B415,1			
% HHV Basis	71,09%		
% LHV Basis	76,50%		
Heat output range - Btu/h	14 582	to	30042
Co Arithmetic average g/min	0,84		

UNITED STATES ENVIRONMENTAL PROTECTION AGENCY
RESEARCH TRIANGLE PARK, NC 27711

FEB 2 8 2018

OFFICE OF
AIR QUALITY PLANNING
AND STANDARDS

Mr. Justin White
Hearthstone QHPP, Inc.
#17 Stafford Ave.
Morrisville, VT 05661

Dear Mr. White,

I am writing in response to your letter dated January 12, 2018, regarding wood heaters manufactured by Hearthstone QHPP, Inc. (Hearthstone). This response, dated February 28, 2018, supercedes our previous response (dated February 26, 2018) to correct an inaccuracy regarding required changes to ASTM E3053-17.

You are requesting to use an alternative test method, using cord wood, as referenced in section 60.532(c) of 40 CFR part 60, Subpart AAA, Standards of Performance for New Residential Wood Heaters (Subpart AAA) to meet the 2020 cord wood alternative compliance option. The 2020 cord wood alternative compliance option states that each affected wood heater manufactured or sold at retail for use in the United States on or after May 15, 2020, must not discharge into the atmosphere any gases that contain particulate matter in excess of 2.5 g/hr. Compliance must be determined by a cord wood test method approved by the Administrator along with the procedures in 40 CFR 60.534. You have requested approval to use the procedures and specifications found in ASTM Method E3053-17, a cord wood test method titled, "Standard Test Method for Determining Particulate Matter Emissions from Wood Heaters using Cordwood Test Fuel," in conjunction with ASTM E2515-11 and Canadian Standards Administration (CSA) Method CSA-B415.1-10, which are specified in 40 CFR 60.534.

We understand that Hearthstone is also requesting that the alternative method proposed above be approved to apply broadly to all wood heaters manufactured by Hearthstone meeting the requirements of Subpart AAA, from the approval date of this request until such time that Subpart AAA is revised or replaced to require a different cord wood certification method, providing all requirements of section 60.533 of Subpart AAA are met.

With the caveats set forth below, we approve your alternative test method request for certifying wood heaters using ASTM E3053-17 in conjunction with section 60.534 of Subpart AAA to meet the 2020 cord wood compliance option until such time that Subpart AAA is revised or replaced to require a different cord wood certification method. We also approve application of this alternative method to all wood heaters manufactured by Hearthstone meeting the requirements of Subpart AAA.

As required in Subpart AAA, section 60.354(d), you or your approved test laboratory must also measure the first hour of particulate matter emissions for each test run using a separate filter in one of the two parallel sampling trains. These results must be reported separately and also included in the total particulate matter emissions per run. Also, as required by Subpart AAA, section 60.534(e), you must have your approved laboratory measure the efficiency, heat output, and carbon monoxide emissions of the tested wood heater using CSA-B415.1-10. For measurement of particulate matter emission concentrations, ASTM 2515-11 must be used.

The following change to ASTM E3053-17 must be followed:

1. Coal bed conditions prior to loading test fuel. The coal bed shall be a level plane without valleys or ridges for all test runs in the high, low, and medium burn rate categories.

The following changes to ASTM E2515-11 must be followed:

1. The filter temperature must be maintained between 80 and 90 degrees F during testing.

2. Filters must be weighed in pairs to reduce weighing error propagation; see ASTM 2515-11, Section 10.2.1 Analytical Procedure.

3. Sample filters must be Pall TX-40 or equivalent Teflon-coated glass fiber, and of 47 mm, 90 mm, 100 mm, or 110 mm in diameter.

4. Only one point is allowed outside the +/- 10 percent proportionality range per test run.

A copy of this letter must be included in each certification test report where this alternative test method is utilized.

It is reasonable that this alternative test method approval be broadly applicable to all wood heaters subject to the requirements of 40 CFR part 60, Subpart AAA. For this reason, we will post this letter as ALT-125 on our website at *http://www3.epa.gov/ttn/emc/approalt.html* for use by other interested parties. As noted earlier in this letter, this alternative method approval is valid until such time that Subpart AAA is revised or replaced to require a different cord wood certification method, and at such time, this alternative will be reconsidered and possibly withdrawn.

If you have additional questions regarding this approval, please contact Michael Toney of my staff at 919-541-5247 or toney.mike@epa.gov.

Sincerely,

Steffan M. Johnson, Group Leader
Measurement Technology Group

cc: Amanda Aldridge, EPA/OAQPS/OID
Adam Baumgart-Getz, EPA/OAQPS/OID
Rafael Sanchez, EPA/OECA
Michael Toney, EPA/OAQPS/AQAD