WESTINTRENDS

DESIGNED IN CALIFORNIA

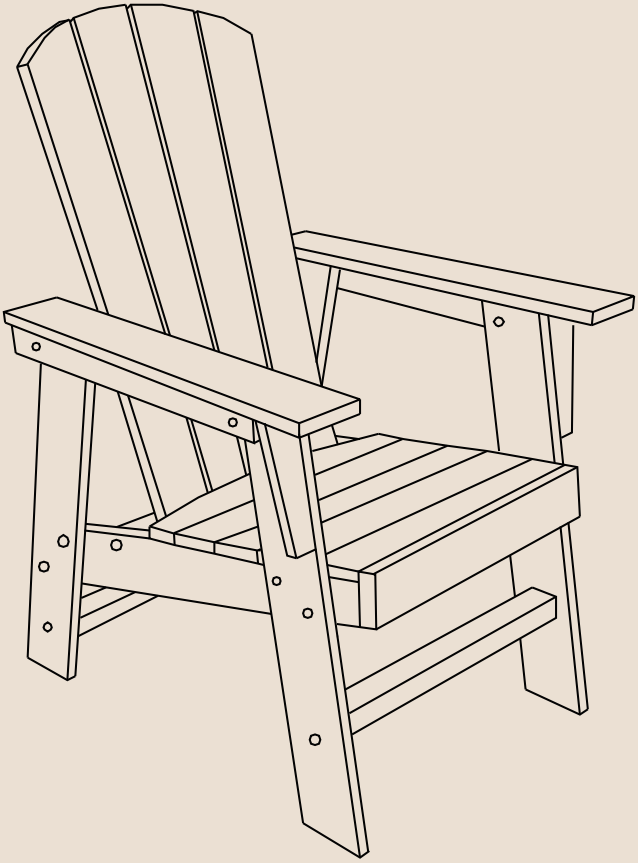

KIDS OUTDOOR POLY ADIRONDACK CHAIR

THANK YOU!

We appreciate you for choosing WestinTrends!

Thank you for letting WestinTrends continue to offer accessible luxury trends, inspired by everyone!

JOIN THE WESTINTRENDS COMMUNITY

Sign up here:

https://westintrends.com/welcome

QUESTIONS OR COMMENTS?

If you have questions reach out to cs@westintrends.com

FOLLOW, SHARE, & LEARN

PRODUCT REGISTRATION

https://westintrends.com/apps/product-registration

ACCESSIBILITY - COMMUNITY - VALUE - SUSTAINABILITY

NOTICE

Do not overtighten screws. (Insert all screws before tightening screws.)

- Be careful when assembly, avoid hurting the top surface.
- Clean the table with lukewarm water, mild detergent & soft cloth.
- Firmly secure all bolts before use, do not use any part of this item as a step ladder.
- Reconfirm that all bolts, screws, and nuts are secure every 90 days.
- Do not use or store this item in the proximity of open flame or flammable/combustible chemicals.
- Be aware that some parts are heavy and have sharp edges.
- Do not overtighten screws. (Insert all screws before tightening screws.)
- Please do not exceed the weight limitations of this item.

TOOLS REQUIRED

ALLEN WRENCH (PROVIDED)

WRENCH (PROVIDED)

LBS

CHAIR 300 LBS CAPACITY

1 PERSON ASSEMBLY

UP TO 20 MIN. ASSEMBLY

HARDWARE

1 SCREW M6 x 90mm

2 PCS

2 SCREW M6 x 55mm

6 PCS

3 BOLT M6 x 45mm

10 PCS

4 M6 NUT

10 PCS

PARTS

A CHAIR SEAT

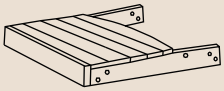

1 PC

B CHAIR BACKREST

1 PC

C RIGHT CHAIR ARM

1 PC

PARTS

D LEFT CHAIR ARM

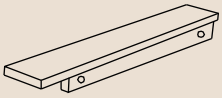

1 PC

E RIGHT CHAIR LEG

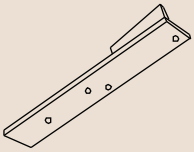

1 PC

F LEFT CHAIR LEG

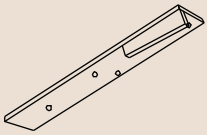

1 PC

G RIGHT REAR LEG

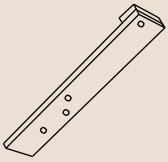

1 PC

H LEFT REAR LEG

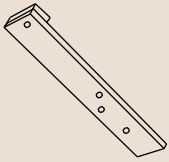

1 PC

I RAIL

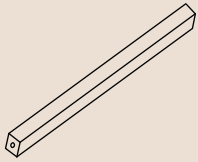

2 PCS

PRODUCT ASSEMBLY - OVERALL VIEW

Look at the overall view of this chair and learn the exact position of each part to be assembled.

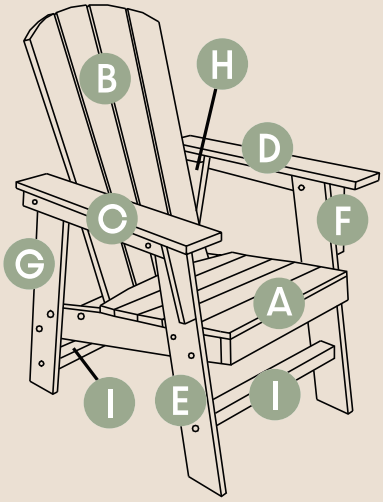

PRODUCT ASSEMBLY

1

Attach **Part F Left Chair Leg** to **Part A Chair Seat** with 2 sets of **Hardware #3 Bolt** and **Hardware #4 Nut**.

Do not tighten screws and bolts too much at this stage.

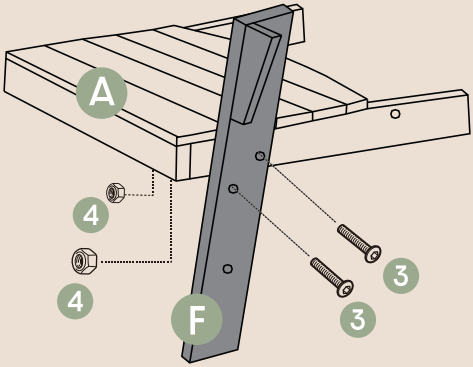

2

Attach **Part E Right Chair Leg** to the **Part A Chair Seat** with 2 sets of **Hardware #3 Bolt** and **Hardware #4 Nut**.

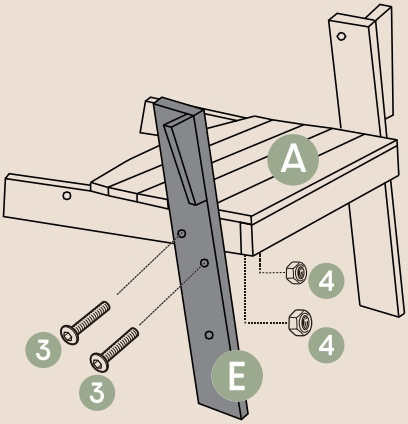

3

Attach **Part G Right Rear Leg** to **Part A Chair Seat** with 2 sets of **Hardware #3 Bolt** and **Hardware #4 Nut**.

Do the same of **Part H Left Rear Leg** to **Part A Chair Seat**.

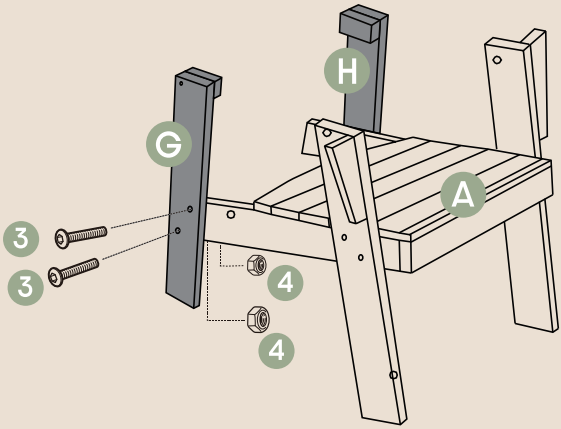

4

Attach **Part I Rail** to **Part E** and **Part F Chair Legs** with 2 pcs of **Hardware #2 Screw**.
Attach **Part I Rail** to **Part G** and **Part H Rear Legs** with 2 pcs of **Hardware #2 Screw**.

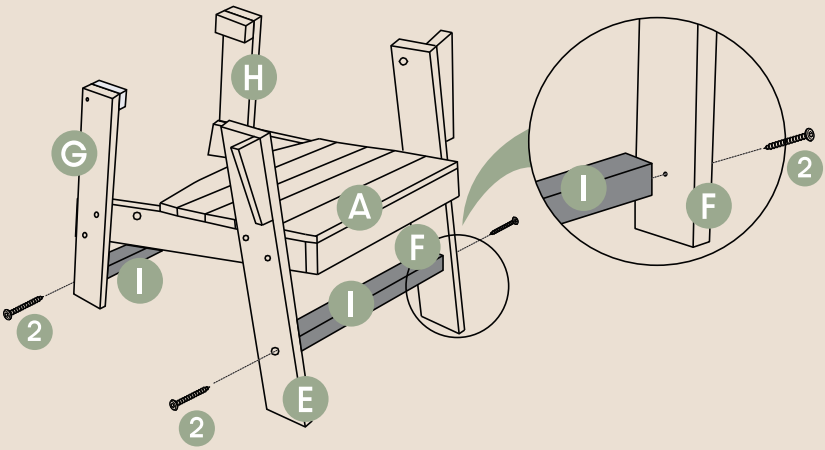

5

Attach **Part B Chair Backrest** to **Part A Chair Seat** with 2 pcs of **Hardware #2 Screw.**

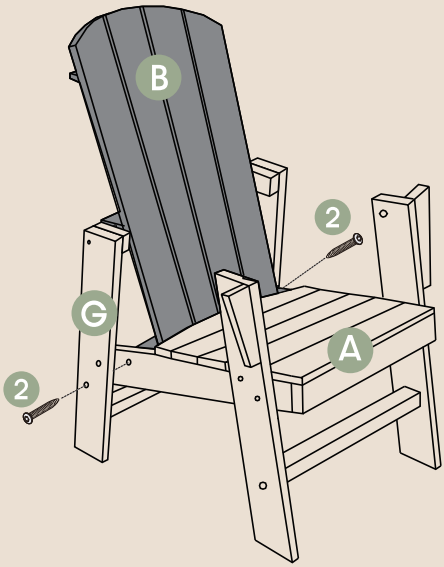

6

Place **Part C Right Chair Arm** onto **Part E Right Front Leg** and **Part G Right Rear Leg** and fix them with 1 pc of **Hardware #1 Screw**, 1 set of **Hardware #3 Bolt** and **Hardware #4 Nut**.

Do the same to attach another **Part D Left Chair Arm** to **Part F** and **H Left legs** with 1 pc of **Hardware #1 Screw**, 1 set of **Hardware #3 Bolt** and **Hardware #4 Nut.**

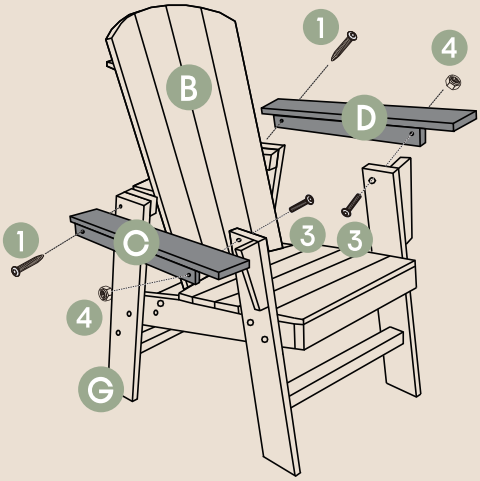

7 Tighten all the bolts and lock nuts as well as the screws again to ensure the steady of this chair.

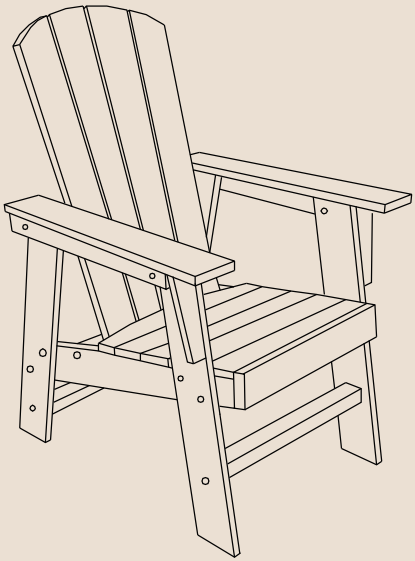

REGISTRATION & REFUND POLICY

https://westintrends.com/apps/product-registration

https://westintrends.com/policies/refund-policy

HAVING TROUBLE

- **Not sure how to assemble or missing pieces?**

Please contact our Customer Service Team for assistance at ***cs@westintrends.com***

Have Order #, Part # or SKU ready to speed up customer service!

CLEANING TIPS

REGULAR CLEAN: Use a mixture of warm water and mild soap. Gently scrub the surface with a soft bristle brush to remove any dirt or stains.

QUICK CLEAN: You can simply wipe down the HDPE furniture with a damp cloth. The material's resilience makes it resistant to most spills and stains, ensuring a hassle-free maintenance routine.

Regular cleaning not only preserves the aesthetic appeal of your furniture but also helps extend its lifespan.

Pressure washer can be used for seriously deep-cleaning - DO NOT exceed 1500 PSI - this will remove any debris and dirt.