Char-Broil®

PLATINUM TRU-INFRARED™

ASSEMBLY INSTRUCTIONS

Estimated Assembly Time: 45 minutes

Model R33CC1718

CE 2531 CS 0004

P/N 80027331

22 PAP

Tools Suggeted:

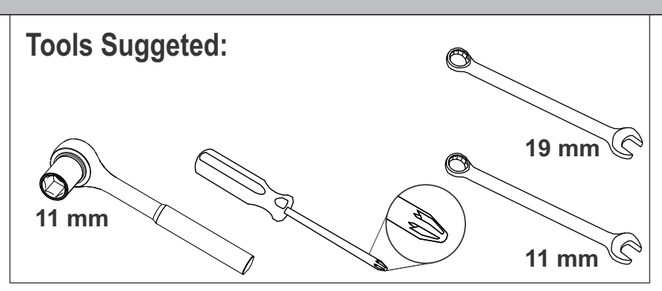

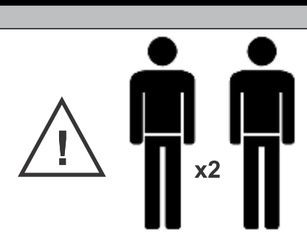

NOTE: Assemble your grill on a clean, level surface.

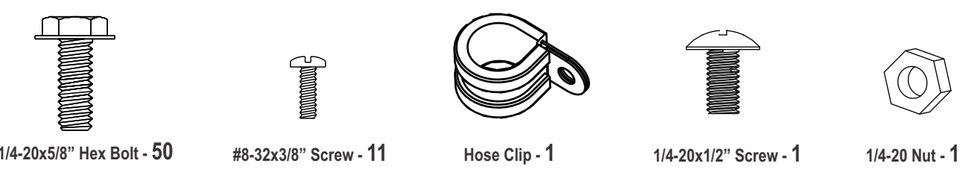

1/4-20x5/8" Hex Bolt - **50** | #8-32x3/8" Screw - **11** | Hose Clip - **1** | 1/4-20x1/2" Screw - **1** | 1/4-20 Nut - **1**

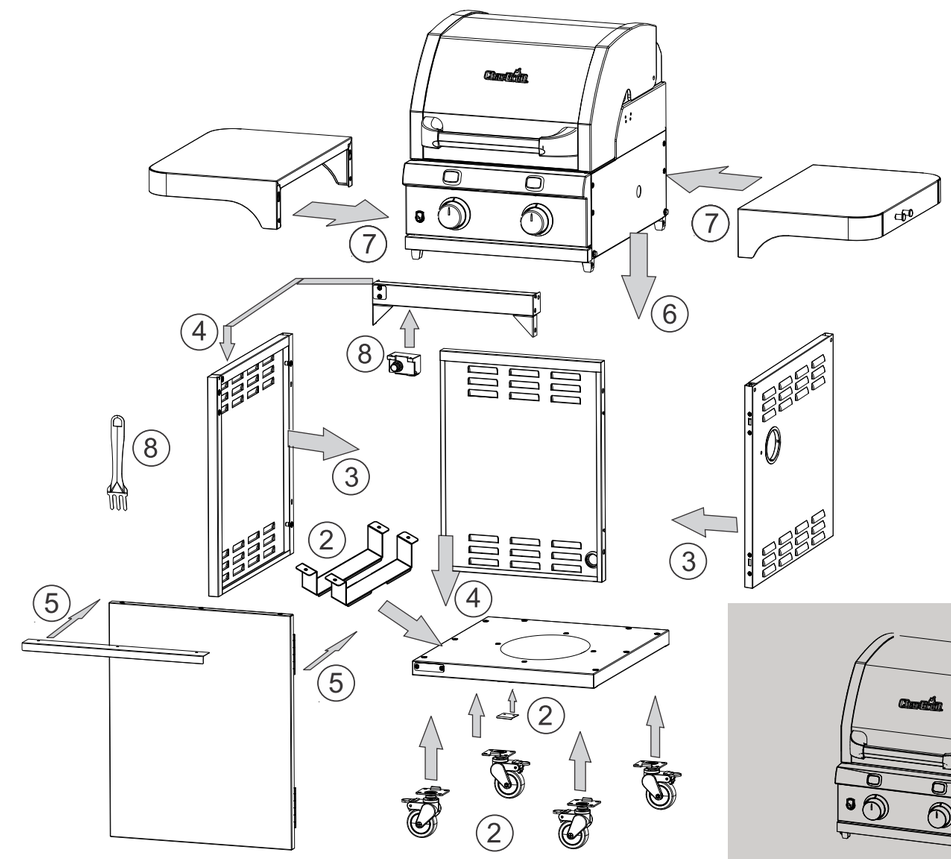

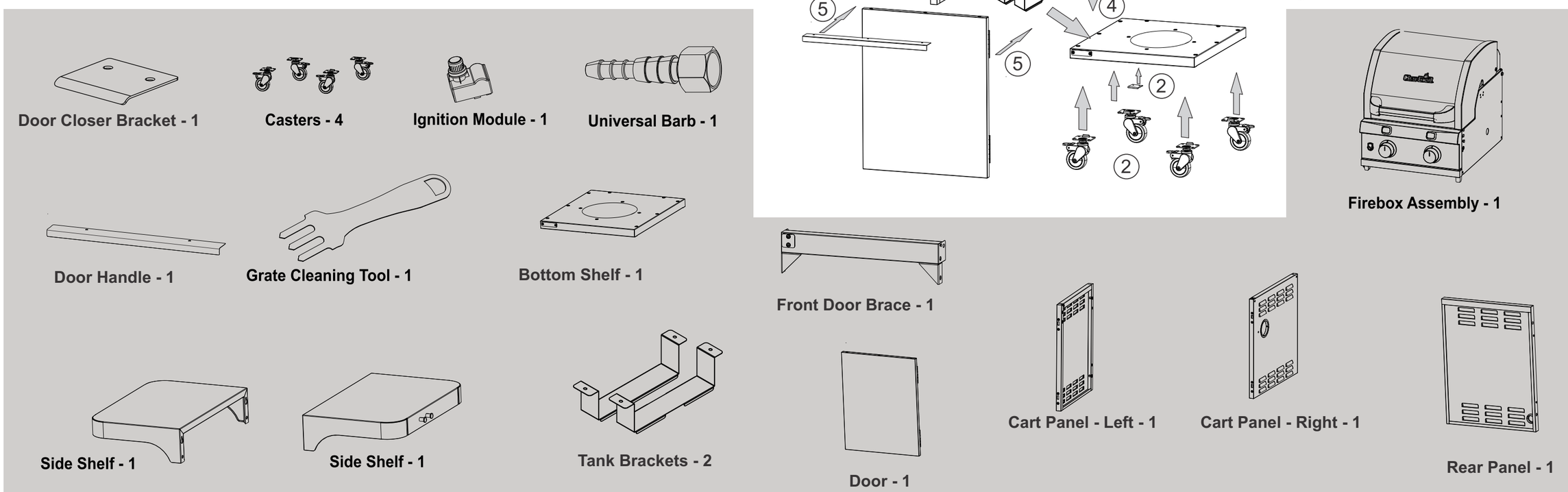

1

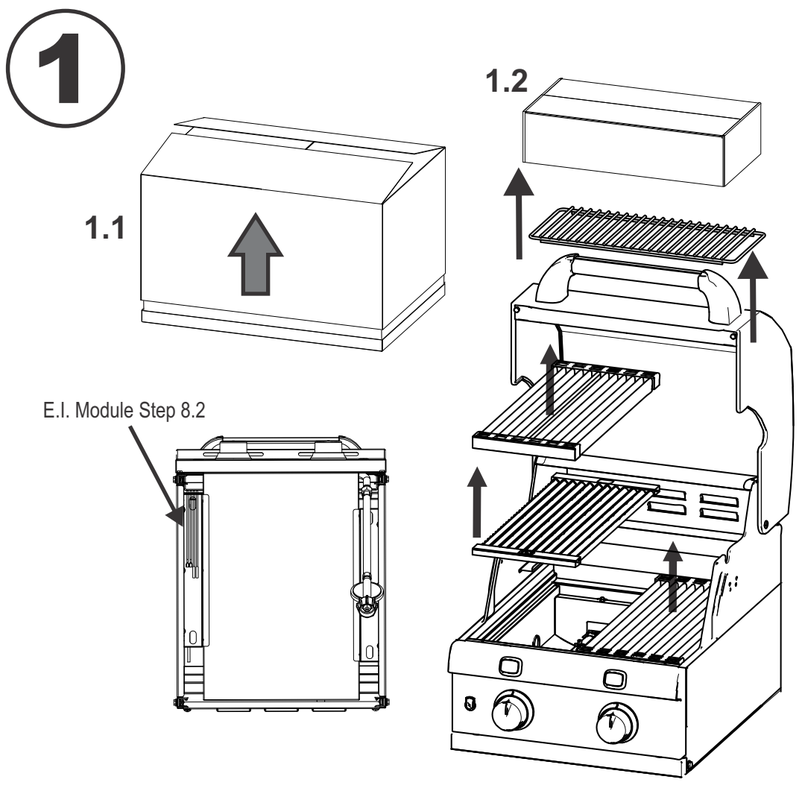

2

20 - 2 -

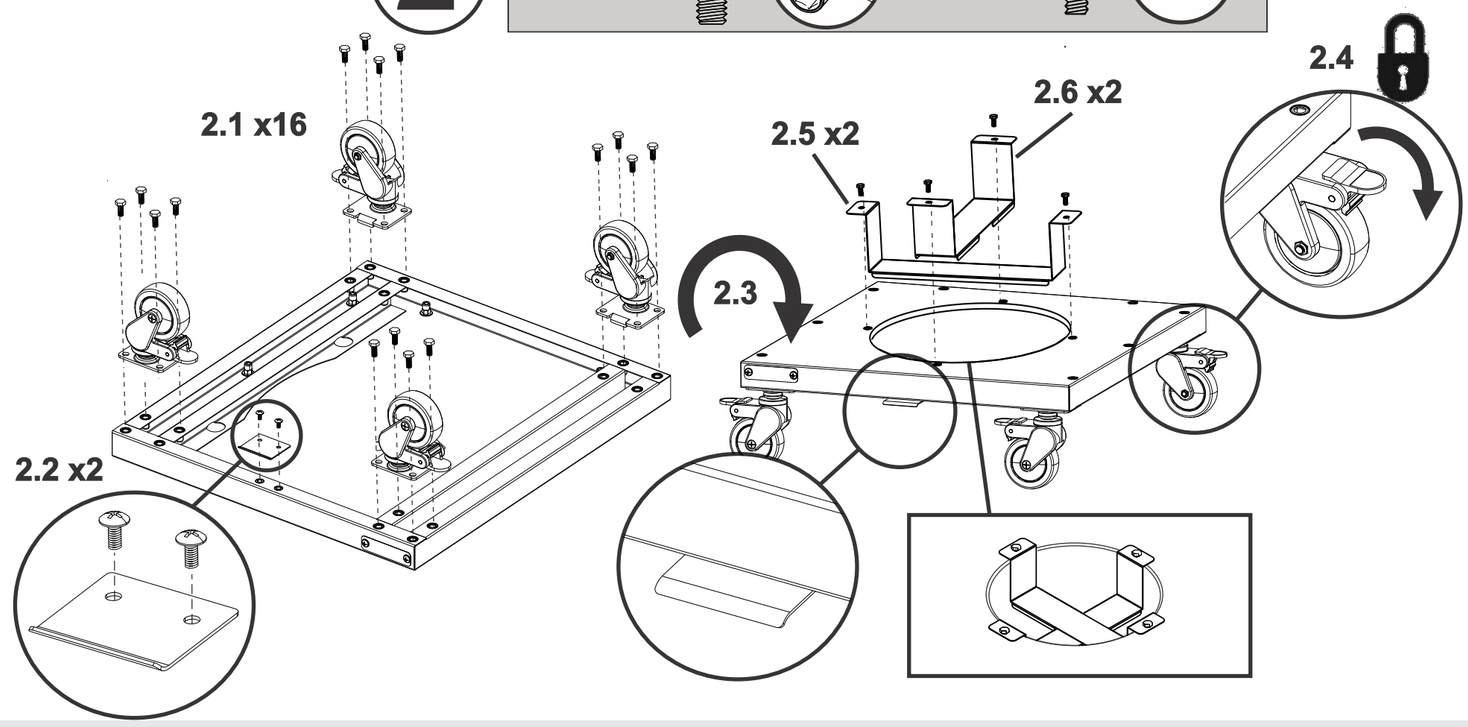

3

4 - **HAND TIGHTEN ONLY!**

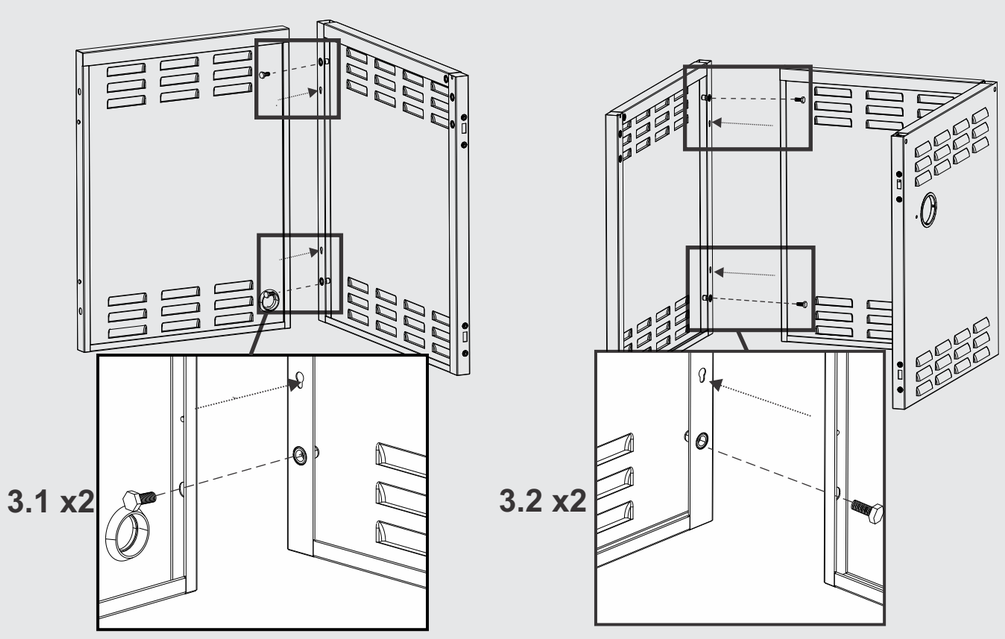

4

14 -

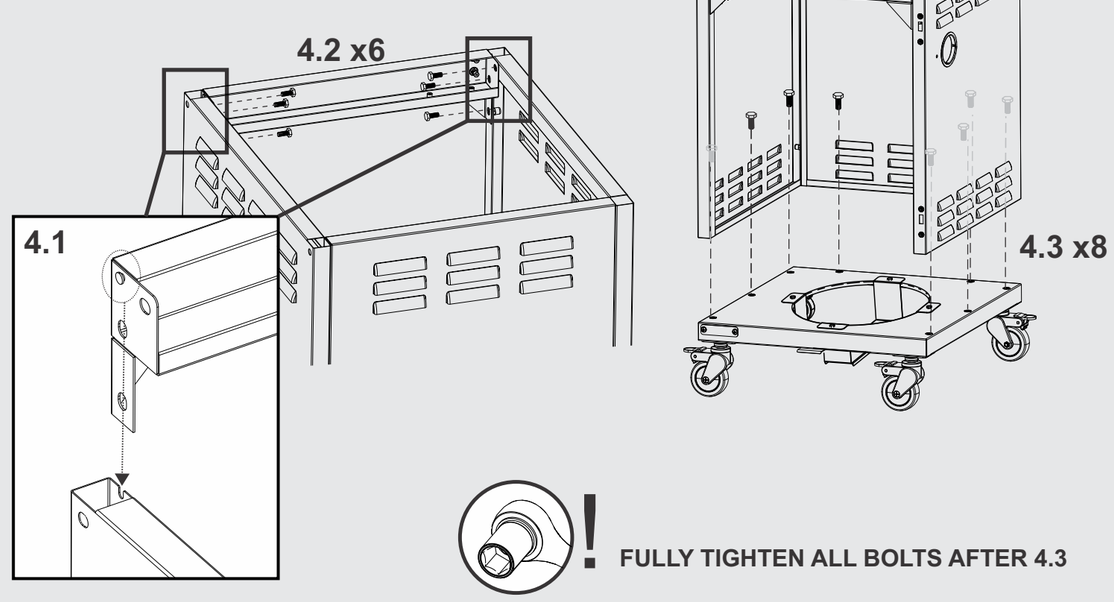

! **FULLY TIGHTEN ALL BOLTS AFTER 4.3**

5

7 -

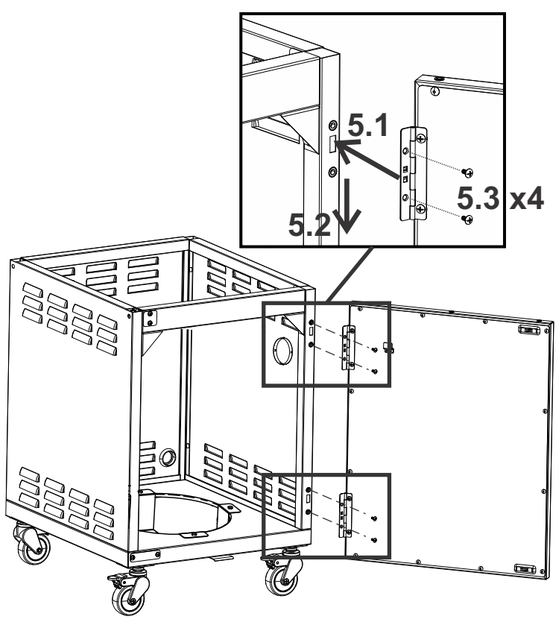

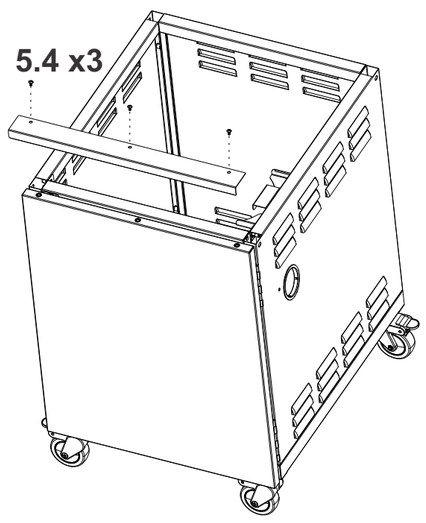

6

x2 4 -

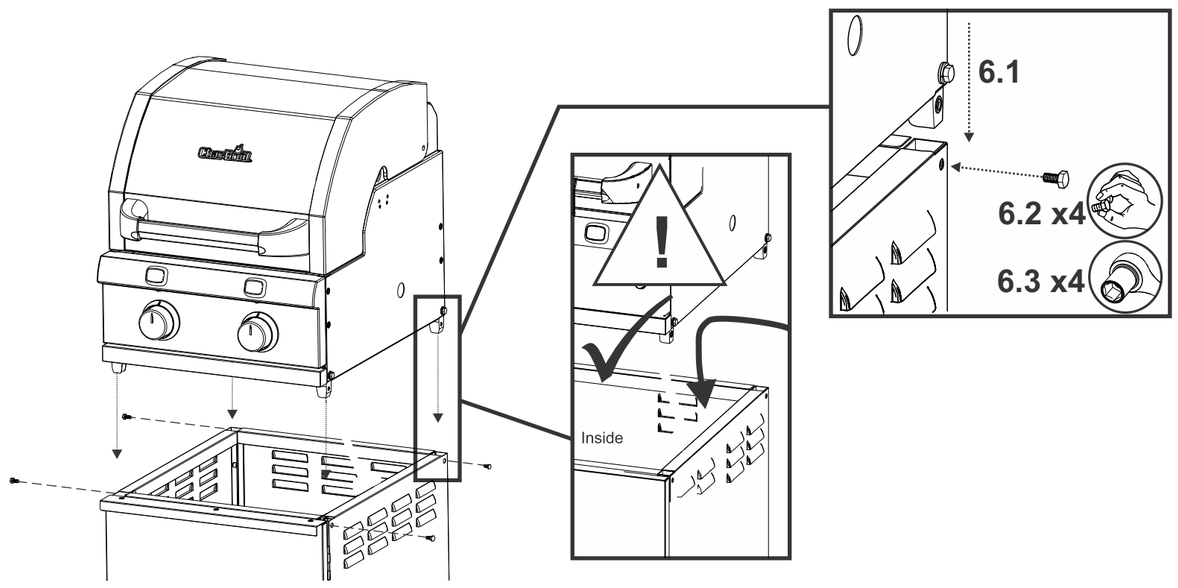

7

8 - 11 mm

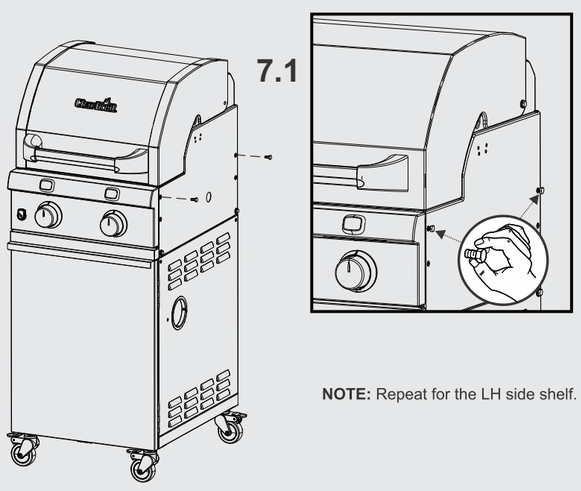

NOTE: Repeat for the LH side shelf.

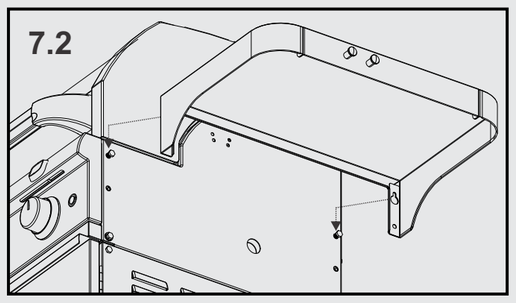

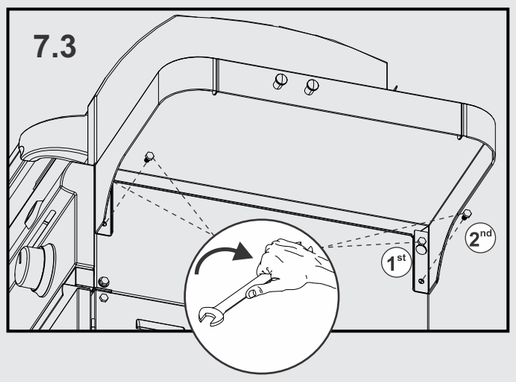

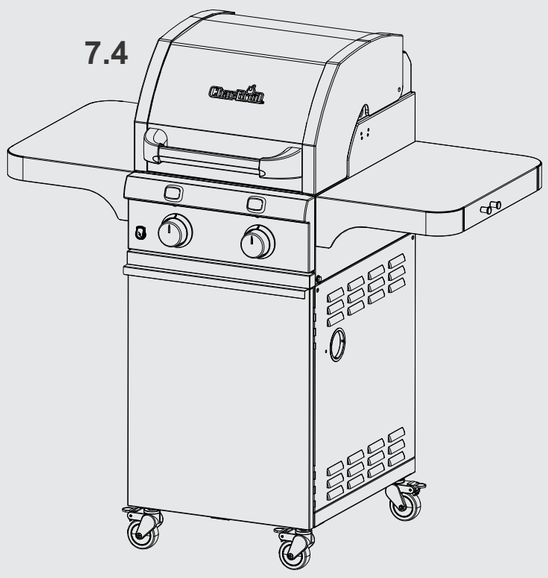

8

1 - 2 -

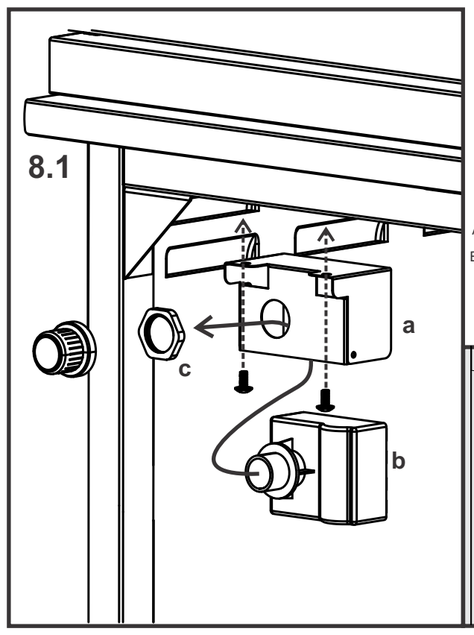

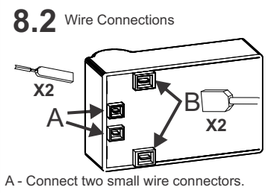

A - Connect two small wire connectors.

B - Connect 2 large wire connectors.

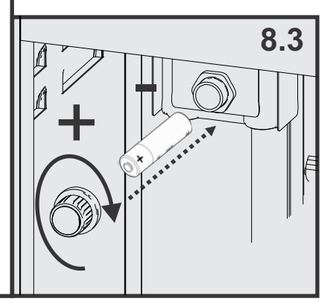

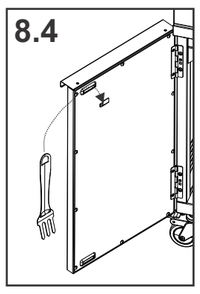

9

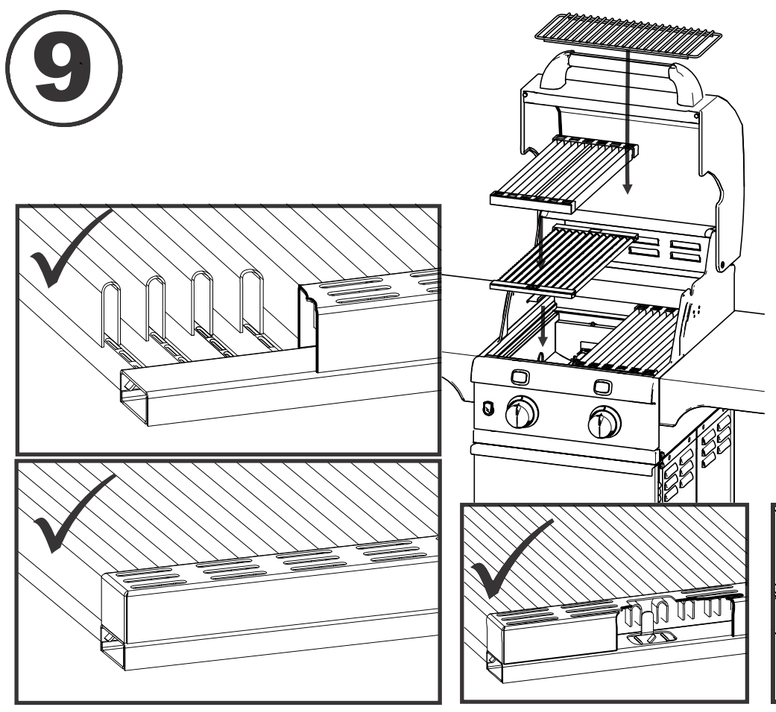

Before first use, please read all safety and operating instructions contained in your **Product Guide.**

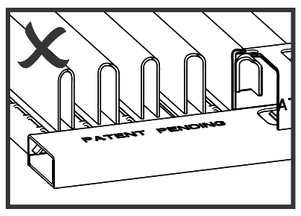

10
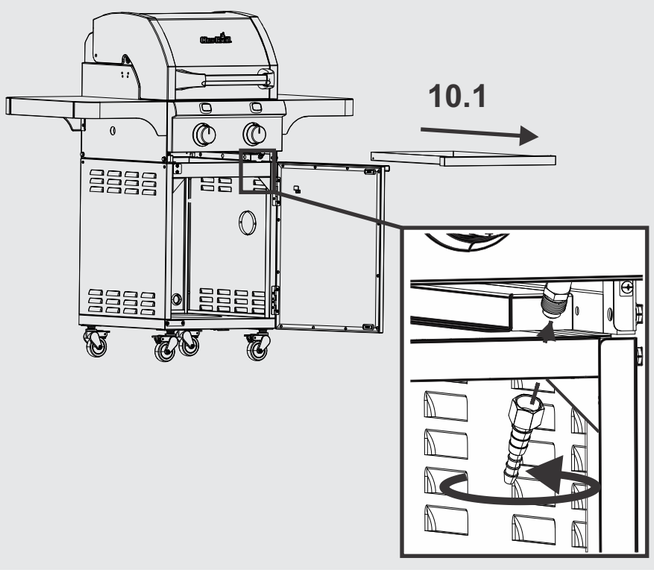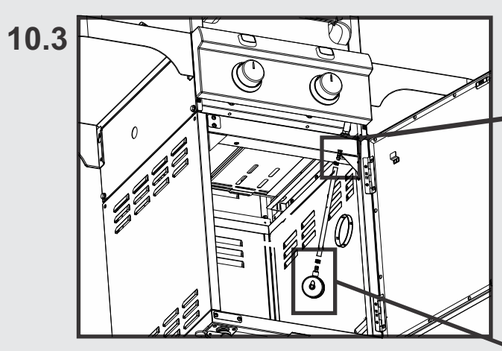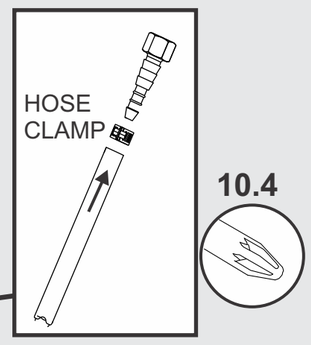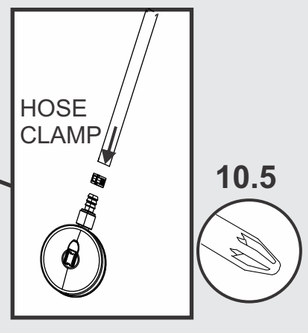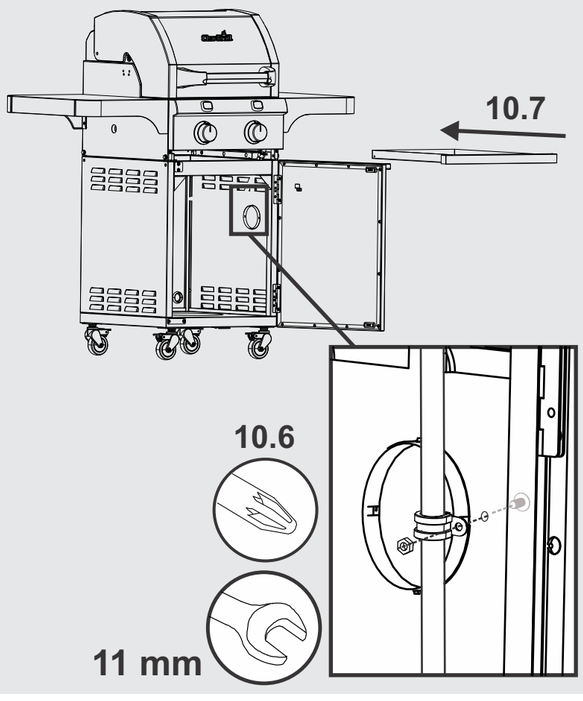
1 - 11 mm 19 mm