# LMS30MAB0,1,5,6,7,8

30" Console Sink with Acrylic Legs & Shelf

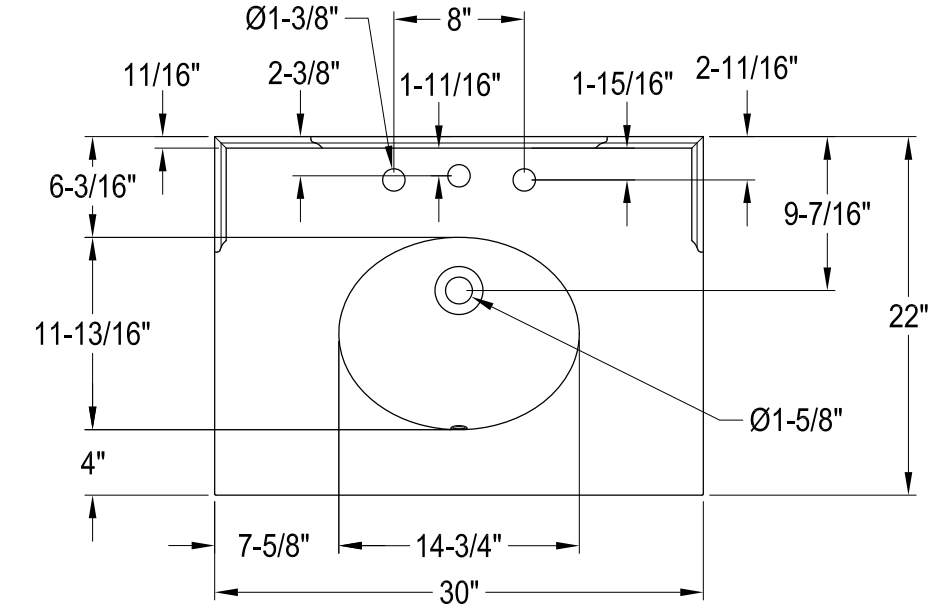

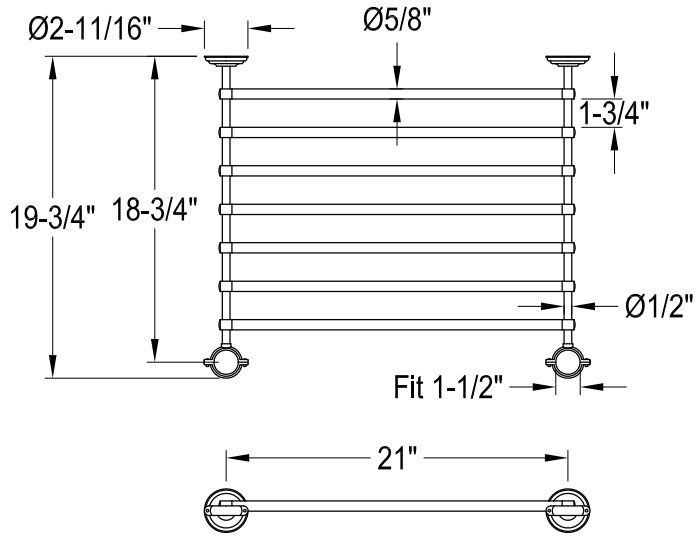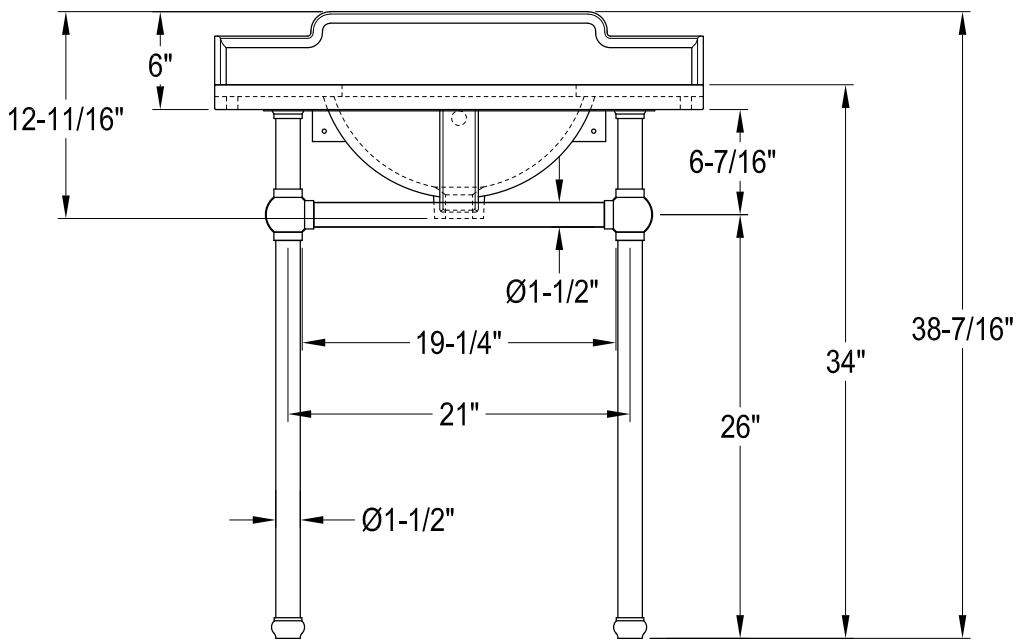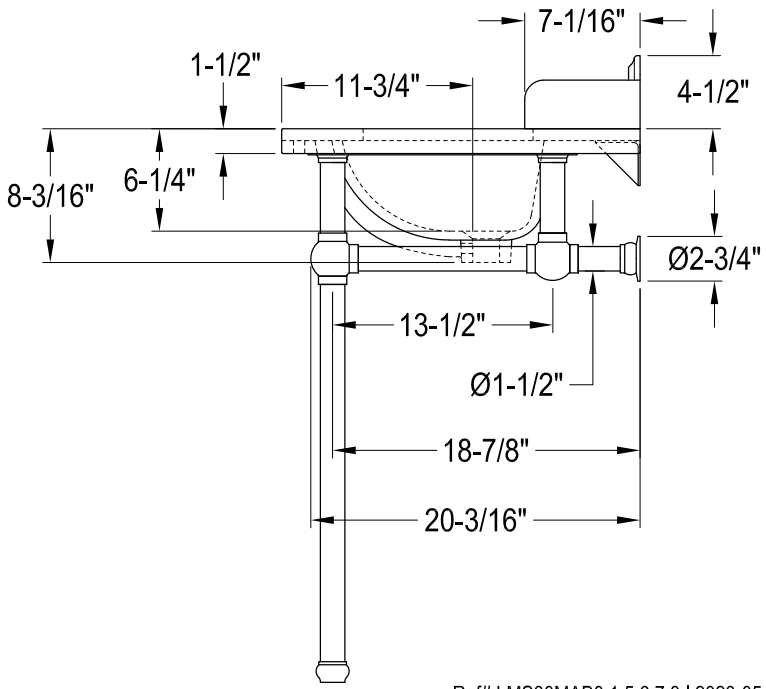
## VXHSB21180,1,5,6,7,8