KINGSTON

TO ORDER PARTS, CALL: 1-877-252-7277
www.kingstonbrass.com

VRTRO515224

51" Solid Surface White Stone Freestanding Tub with Drain

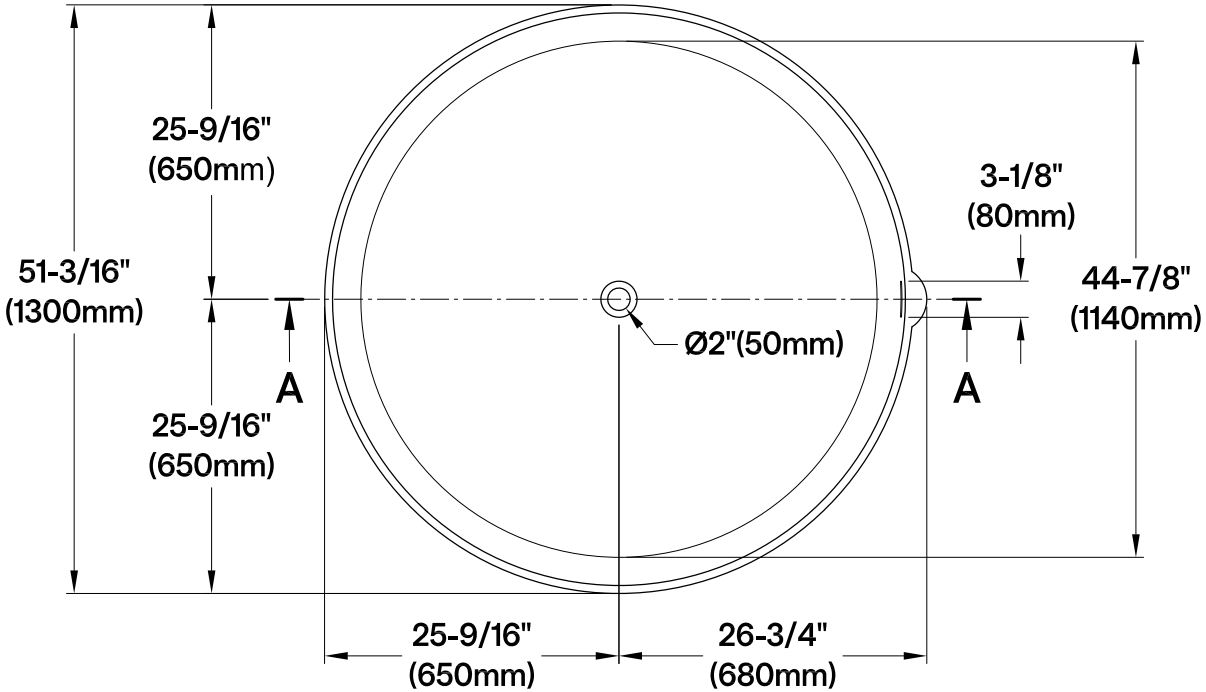

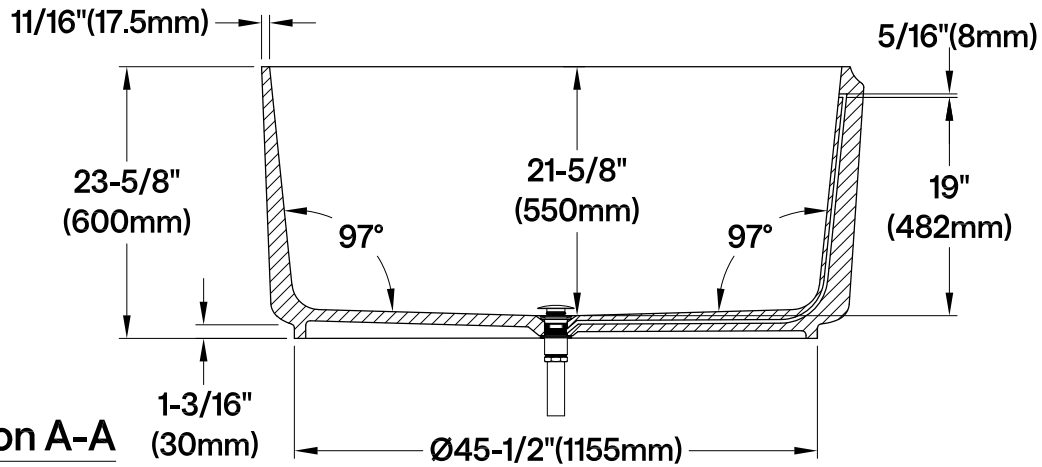

Section A-A

Drain Hole Size

Scale (2:1)

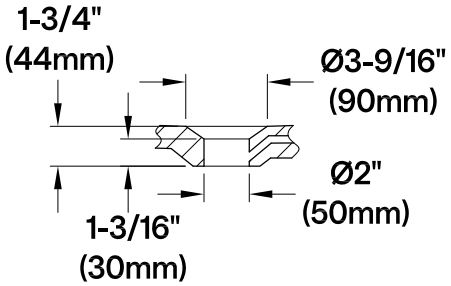

2025-11-A