AXOR

hansgrohe

**Locarno Select**
**HighArc Kitchen Faucet, 2-Spray Pull-Out with sBox, 1.75 GPM**
Finishes : **steel optic** Part no. : **04828800**

## Description

**Features**

- Swivel range 150°
- Aerated spray, needle spray
- Toggle spray diverter
- Select button provides convenient start/stop of the water flow at the sprayhead
- MagFit magnetic sprayhead docking
- Flow: 1.75 GPM (6.6 L/Min)
- Ceramic cartridge
- 1 ⅜" Mounting hole required

## Technology

## Product image
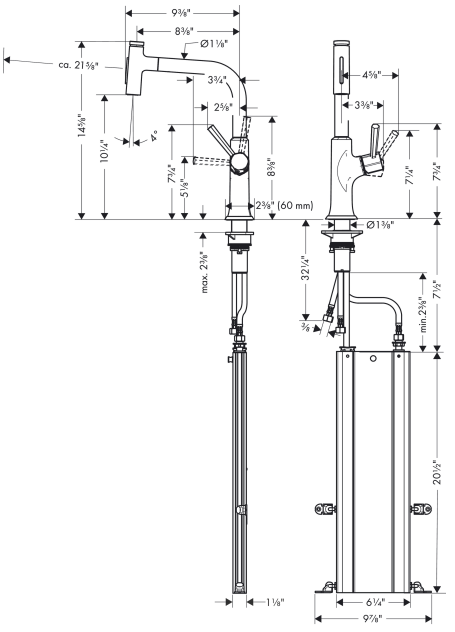
## Scale drawing