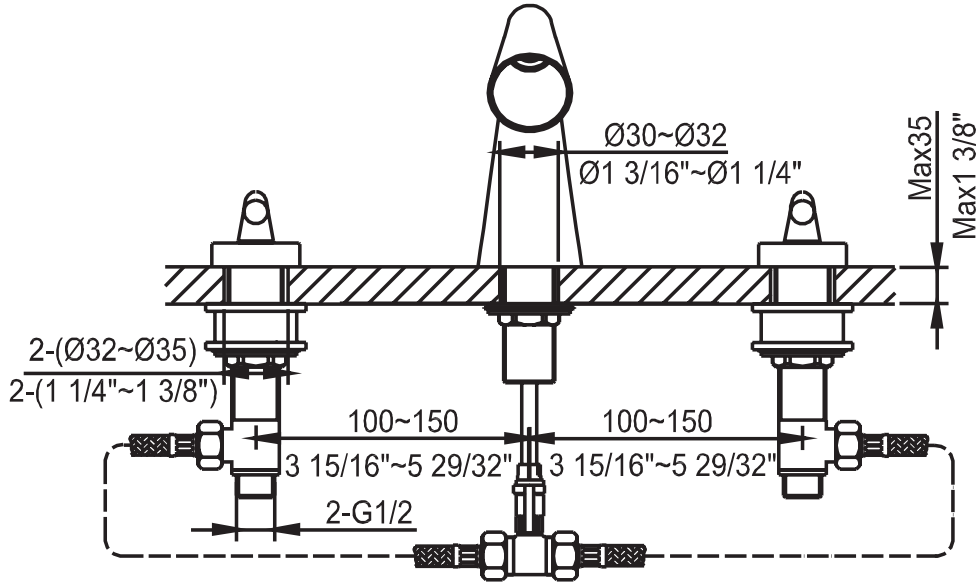
Ø30~Ø32
Ø1 3/16"~Ø1 1/4"
Max35
Max1 3/8"
2-(Ø32~Ø35)
2-(1 1/4"~1 3/8")
100~150
3 15/16"~5 29/32"
100~150
3 15/16"~5 29/32"
2-G1/2

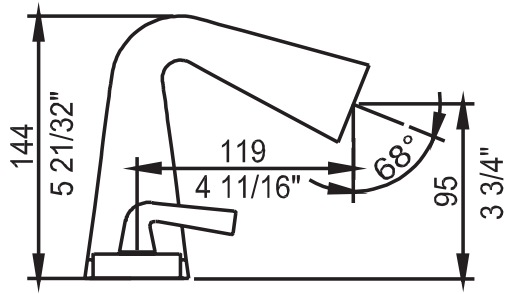
144
5 21/32"
119
4 11/16"
68°
95
3 3/4"