KINGSTON

TO ORDER PARTS, CALL: 1-877-252-7277
www.kingstonbrass.com

VTAM6032L21

60" Acrylic Alcove Tub with Left Hand Drain Hole

M10 x 60 (2 pcs)
M10 x 45 (2 pcs)

Drain Hole Size
(Scale 3:1)

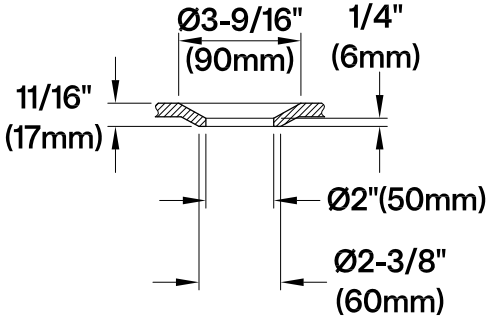

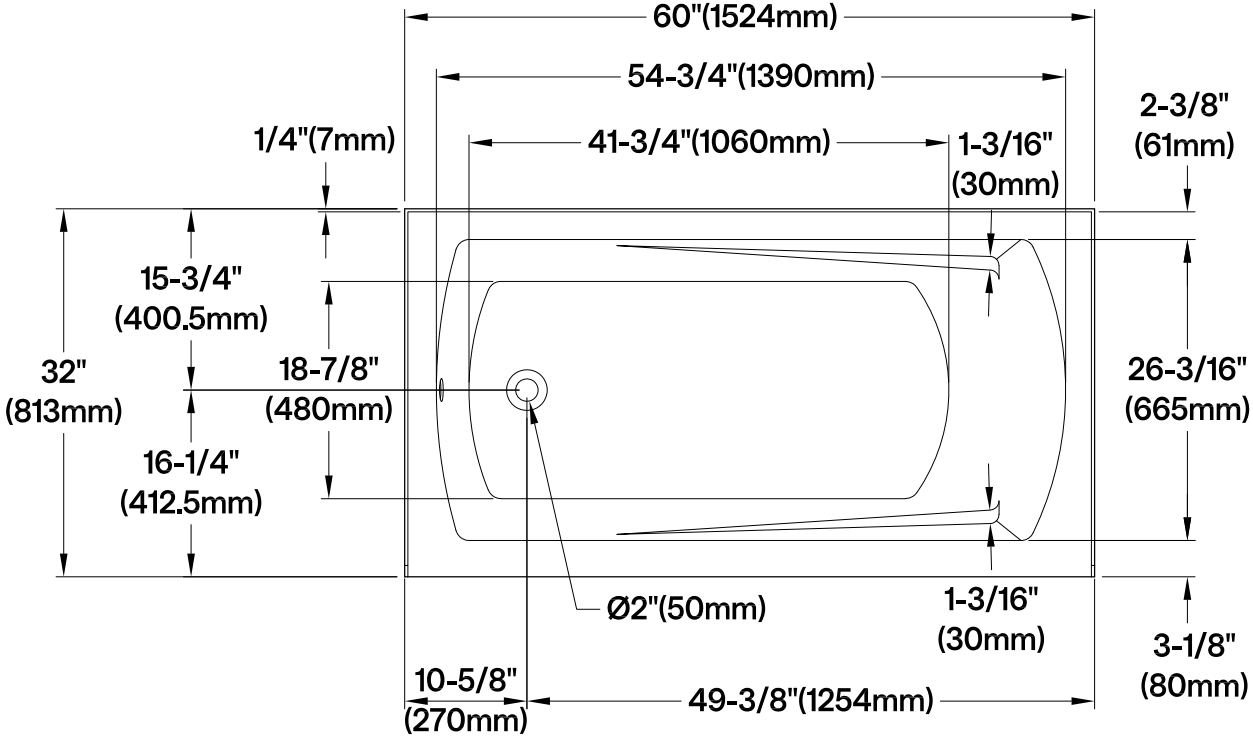

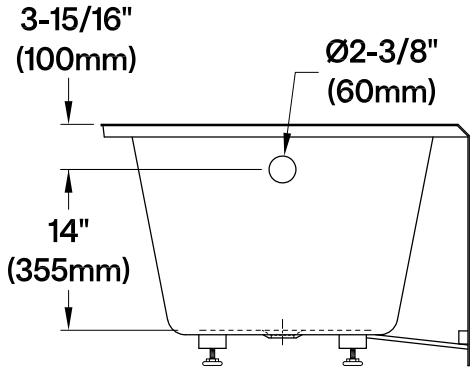

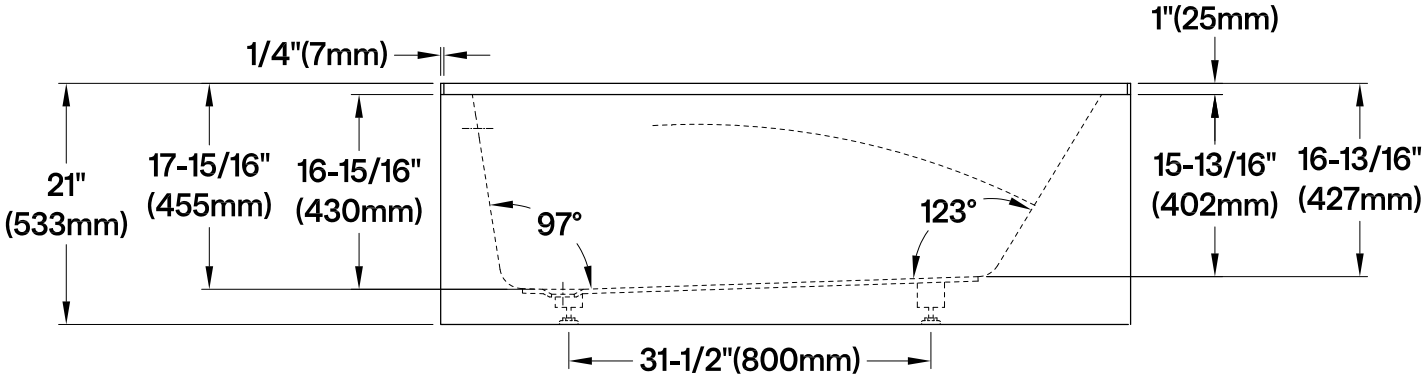

2025-07-A