Saramonic

Sound.Remarkable.

# UHF Wireless Microphone System
# 无线麦克风系统

# UwMic15

User Manual
用户手册

## Statement

Please read this manual carefully before using and strictly operate and store in accordance with the instructions. Please save it for your future reference.
If the user manual can not help you to solve certain problems, please ask your retailer for help or email us: **info@saramonic.com.**

## Cautions

1. Do not use the unit under water, don't expose it to rain. Please store it in a cool, dry place.
2. Please use and store it in normal temperature. Do not move it from overheated to supercooled condition frequently as well as keep away from heat sources such as heater and oven.
3. When using and storing, please pay attention to dust and moisture.
4. Be careful to violent collision.
5. To avoid acoustical feed-back, do not hold the microphone close to the loudspeakers.
6. For the best sound pick-up pattern do not hold your hand against the microphone head.
7. Remove the batteries from the battery compartment when the device is not used for a long time.

Contents

General Introduction ..... 2
Portable Receiver UwMic15-RX15 ..... 2
Introduction ..... 2
Product Structure ..... 2
Attaching Accessories ..... 4
LCD Display Operation Guide ..... 5
Body-pack Transmitter UwMic15-TX15 ..... 6
Introduction ..... 6
Product Structure ..... 7
Antenna ..... 7
Attaching Accessories ..... 8
LCD Display Operation Guide ..... 9
Hand-held Microphone UwMic15-SR-HM15 ..... 11
Introduction ..... 11
Product Structure ..... 11
Setup Guide ..... 12
Plug-on Transmitter UwMic15-SR-XLR15 ..... 13
Introduction ..... 13
Product Structure ..... 13
Attaching Accessories ..... 15
LCD Display Operation Guide ..... 16
Operation Guide ..... 18
Specification ..... 21
Transmitter TX15, SR-HM15, SR-XLR15 ..... 21
Receiver RX15 ..... 22
Packing List ..... 23

# General Introduction

The Saramonic UwMic15 UHF wireless microphone system is intended for portable wireless operation and can be used in several environments for applications such as DSLR video, field recording, broadcast TV, electronic news gathering (ENG), on-the-spot interviews, and more.

# Portable Receiver UwMic15-RX15

## Introduction

The Saramonic UwMic15-RX15 is a camera-mountable integrated wireless receiver. It features a wide switching RF bandwidth, an easy-to-read LCD display and infrared synchronization between transmitter and receiver.

## Product Structure

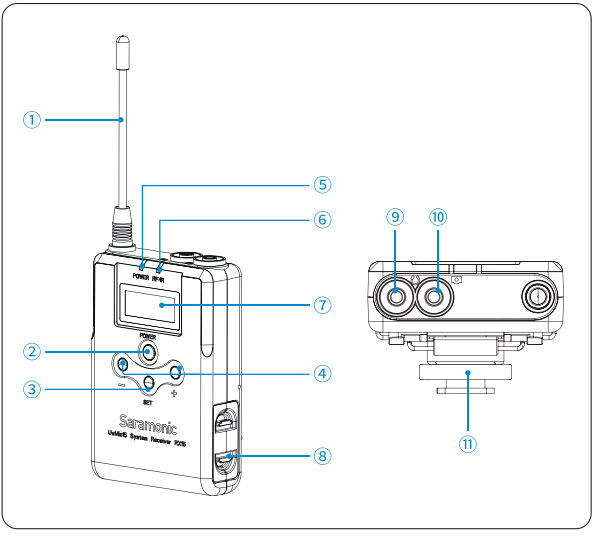


① **Antennas**

② **POWER button**
Long press to turn on or off the RX15.

③ **SET button**
Long press the SET button to enter the displayed menu. Then, short press the SET button to confirm your option or long press again to exit without saving.

④ **+ or - button**
Selects functions or values shown on the display.

⑤ **POWER indicator**
Indicates the battery level as follows:
Green light: Sufficient battery level.
Red light: Low battery level.

⑥ **RF indicator and infrared transmitter port**
The infrared transmitter port sends the set frequency to a transmitter.
RF indicator displays the RF input level as follows:
Green light: RF signal is strong.
Red light: RF signal is weak or disconnected.

⑦ **LCD display**
Display menus, please refer to "LCD Display Operation Guide" (page 5) for more details.

⑧ **Battery compartment**
Operates on two AA batteries (not included).

⑨ **PHONE jack**
Connect a headphone to monitor the audio output.

⑩ **OUTPUT jack**
Connect the RX15 to a video camera, camcorder, mixer or amplifier with the supplied output cable.

⑪ **Standard cold shoe**

## Attaching Accessories

**1** Connect the supplied cable to the output jack.

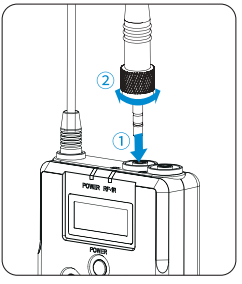


① Plug the supplied cable into the OUTPUT jack.

② For a secure connection, turn to lock the connector.

**2** Attach a belt clip. Please Refer to "Attaching Accessories" (page 8).

**3** Attach the shoe mount adapter.

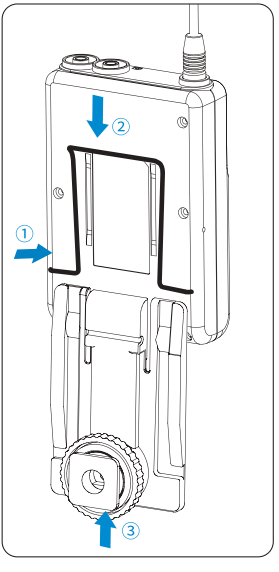


① Please attach the belt clip upside-down before attaching the shoe mount adapter.

② Push the bottom of the belt clip to make some space between the belt clip and the receiver.

③ Align the belt clip with the two vertical grooves on the shoe mount adapter and insert the adapter in the direction of the arrow.

④ Push the shoe mount adapter in fully until the belt clip fits into the horizontal groove on the adapter holds.

## LCD Display Operation Guide

1

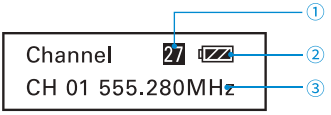


**Home screen**
If no operation is performed for 20 seconds on the other screens, the display will automatically return to the home screen.

① Volume indicator

② Battery level indicator
Displays the battery level. Please replace both batteries immediately when the indicator starts flashing.

③ Channel and frequency
Indicate the current channel and frequency.

2

**Set output volume**
Set the volume of output audio within the range 0 to 30. The setting is retained even after the power is turned off. Default is 27.

3

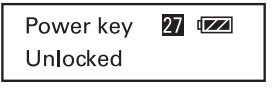


**Power key**
Long press the SET button to unlocked or locked the power key. Lock the power key to prevent the receiver being turned off unwittingly while using.

Unlocked: Long press the power key to turn the receiver on or off (System default).

Locked: The receiver will not be turned off even after pressing the power key.

**Note:** If the batteries are removed and reinserted while the power key is set to Locked, the lock state of the power key will not be changed. You can turn on the receiver by long pressing the power button.

4

IR 27
Match with TX

**Infrared matching function**

Match the receiver and transmitter via infrared. Details of operation, please refer to "Match the channel of receiver and transmitter" (page 11).

5

Backlight 27
Delay 10s

**Set backlight**

Set the backgroud LED light to ON or Delay 60 /30 /10 seconds or OFF. Default is "Delay 10s."

6

Restore 27
Restore default

**Restore settings**

Confirm it then the parameters of RX15 are restored to their factory default settings.

7

Version 27
V1.1 2016-06-28

**Version of the UwMic-RX15**

8

SN 27
UWMRX15160600001

**Serial Number**

# Body-pack Transmitter UwMic15-TX15

## Introduction

This transmitter is a compact transmitter that employs a crystal-controlled PLL synthesizer. It is equipped with a muting function and a locking-type microphone input connector.

## Product Structure

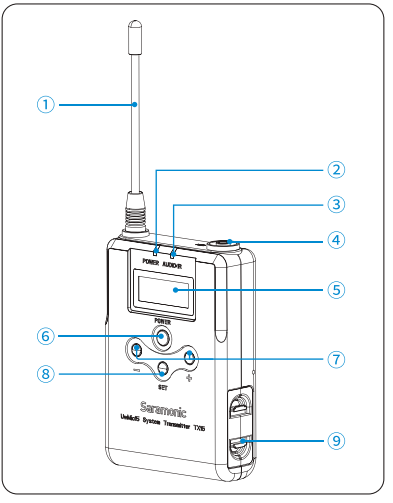


## Antenna

① **POWER indicator**
Indicates the battery level as follows:
Solid Green: Sufficient battery level.
Solid Red: Battery is getting low.

② **AUDIO indicator / IR (infrared detector)**
AUDIO indicator: Indicates the audio input.
IR (infrared detector): Gets the frequency from the receiver.
Solid Green: Audio input level is appropriate.
Flashing Red: Audio is muted (i.e., disabled).
For details on setting the mute function, please refer to "Set Mute key" (page 10).

③ **Audio input connector (Locking type)**
Connect to the supplied lavalier microphone.

⑤ **LCD display**
Display menus, please refer to "LCD Display Operation Guide" (page 9) for more details.

① **Power / Mute button**

| Function | Operation |
|---|---|
| Power ON | Press button for one second or longer |
| Power OFF | Press button until it turns off |
| Mute ON | Short press button |
| Mute OFF | |

② **+ or – button**
Selects functions or values shown on the display.

③ **SET button**
Long press the SET button to enter the displayed menu. Then, short press the SET button to confirm your option or long press again to exit without saving.

④ **Battery compartment**
Accepts two AA batteries (alkaline, nickel metal hydride, or lithium batteries).

## Attaching Accessories

**1** Attach a belt clip.

Insert one end of the belt clip into one of two holes on either side of the transmitter, and then insert the other end into the hole on the other side.

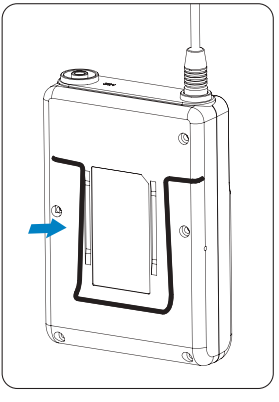

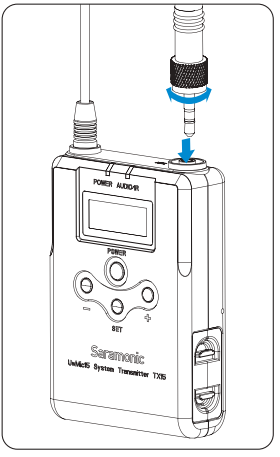


**2** Connect the mcirophone. For a secure connection, turn to lock the connector.

> **Note:** Please turn off the transmitter before attaching or removing the microphone.

## LCD Display Operation Guide

**1**

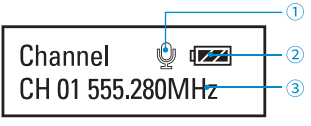


**Home screen**

If no operatlon is performed for 20 seconds on the other screens, the display will automatically return to the home screen.

① Mute indicator

Mute OFF  Mute ON

② Battery level indicator

Displays the battery level. Please replace both batteries immediately when the indicator starts flashing.

③ Channel group indicator

Indicates the channel group.

**Set the microphone drive power supply (+48V)**

When set to ON, 48V phantom power is supplied to the connected microphone and the "+48V" indicator lights up. Default is "+48V OFF."

**Note:** Please DO NOT turn on the phantom power when using with microphones that do not operate on phantom power, mixing boards or any unbalanced devices, because it may cause damage to both transmitter and audio device.

Power Key
Unlocked

Menu display section. Displays various functions. Press the + or - button to switch functions.

**Set Power key**

Select Unlocked or Locked.

Set "Locked" to lock the power button to prevent the unit being turned off or muted unwittingly while using. Default is "Unlocked."

Mute Key
Enable

**Set Mute key**

If you want to mute the audio, please select "Enable" first and then short press the power button. Default is "Enable."

IR
Match with RX

**IR Match**

Set to match with the receiver. The screen will display “Matching” when in process. After successful matching, it will indicate “Sync finished.”

Backlight
ON

**Set Backlight**

Select ON, OFF or Delay 10 / 30 /60 seconds.

Default is “Delay 10s.”

Restore
Restore default

**Restore default setting**

Version
V1.4 Rel. 676001A

**Version of the UwMic15-SR-XLR15**

SN
UWMTX15000000000

**Serial Number**

# Hand-held Microphone UwMic15-SR-HM15

## Introduction

The Saramonic SR-HM15 is a handheld wireless UHF microphone transmitter features a compact metallic body, an easy-to-read LCD display, a RF power switch and a PLL synthesizer. The broadcast quality microphone will capture crystal clear and rich sound. It has a built-in antenna, a muting function and power lock function. The channel of SR-HM15 is synced up with the receiver via infrared.

## Product Structure

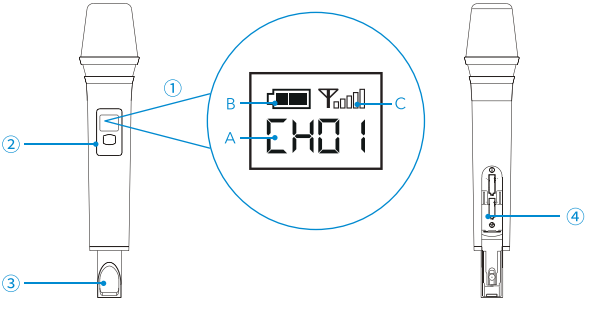


**① LCD screen**

A. Channel number. (This LCD display indicates it is operating on channel 16 of group A.)
B. Battery level icon.
C. MUTE. Audio is not muted.

② **Power / Mute button**
Power: Long press to turn on/off the SR-HM15.
Mute: Short press the button while transmitting, the audio will be muted. Press it again to restore the audio output.

**Note:** In muting, the audio signal is not output but an RF signal is still transmitted.

③ **Antenna**

④ **Battery compartment**
Operates on two AA batteries (not included).
You could use alkaline, lithium or nickel metal hydride batteries.

## Setup Guide

① Install the batteries. Refer to "UwMic15-SR-HM15" (page 18).

② (Option) Set the lock switch to ON or OFF.

③ (Option) Set the RF power to HIGH or LOW. The transmit power level varies depending on the model.

④ Press the power button to turn on the UwMic15-RX15.

⑤ Turn on the receiver UwMic15-RX15 and sync with the transmitter UwMic15-SR-HM15. Details of operation, please refer to "For UwMic15-SR-HM15" (page 19).

⑥ When sync successfully, the screen of UwMic15-SR-HM15 will show the group and channel same as the receiver.

⑦ Close the grip in the direction of the arrows.

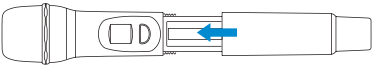

⑧ Now it is ready to use.

# Plug-on Transmitter UwMic15-SR-XLR15

## Introduction

The Saramonic SR-XLR15 is a compact XLR plug-on type transmitter features a wide switching RF bandwidth, an easy-to-read LCD display, +48V phantom power and mute function. It is suitable for portable wireless operation and can be used in a wide range of applications such as DSLR video, broadcast TV, ENG and more.

## Product Structure

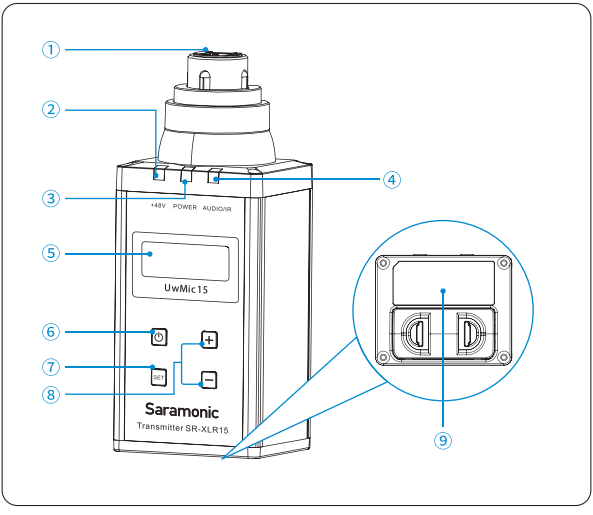


① **XLR audio input jack**
Connects to an XLR microphone or audio devices with line output.

② **+48V power indicator**
Lights up when the +48V phantom power is on.

③ **POWER indicator**
Indicates the battery level as follows:
Solid Green: Sufficient battery level.
Solid Red: Low battery.

④ **AUDIO indicator / IR (infrared detector)**
AUDIO indicator: Indicates the audio input level.
IR (infrared detector): Gets the frequency from the receiver.
Solid Green: Audio input level is appropriate.
Flashing Red: Audio is muted (i.e., disabled). For details on setting the mute function, please refer to "Set Mute key" (page 16).

⑤ **LCD screen**
Displays menus, please refer to "LCD Display Operation Guide" (page 16) for more details.

⑥ **Power / Mute button**
Turns the power or mute function to on or off.

| Function | Operation |
|---|---|
| Power ON | Press the button for one second or longer |
| Power OFF | Press the button until it turns off |
| Mute ON | Short press the button |
| Mute OFF | |

⑦ **SET button**
Long press the SET button to enter the displayed menu. Then short press the SET button to confirm your option or long press again to exit without saving.

⑧ **+ or – button**
Selects functions or values shown on the display.

⑨ **Battery Compartment**
Operates on two AA batteries (alkaline, nickel metal hydride, or lithium batteries). For details on how to insert batteries, please refer to "Install the batteries" (page 18).

## Attaching Accessories

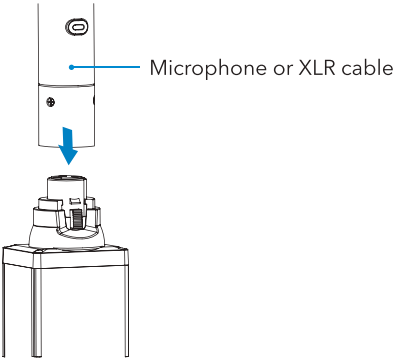


**1** Attach a microphone or XLR cable.

Push the microphone or cable connector into the XLR audio input jack of the SR-XLR15 until it clicks into place.

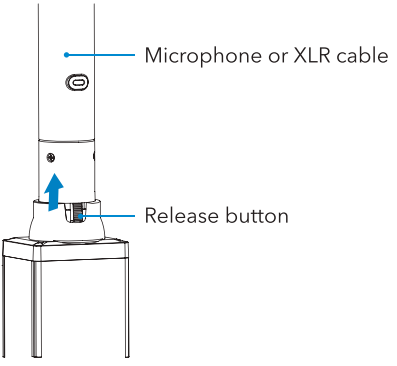


**2** Disconnect a microphone or XLR cable.
Press the release button and pull the microphone or XLR cable out carefully in the direction of arrow.

**Note:** Please turn off the transmitter before attaching or removing the microphone.

## LCD Display Operation Guide

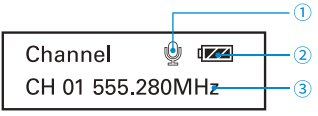


**Home screen**
If no operatlon is performed for 20 seconds on the other screens, the display will automatically return to the home screen.

① Mute indicator
Mute OFF Mute ON

② Battery level indicator
Displays the battery level. Please replace both batteries immediately when the indicator starts flashing.

③ Channel group indicator
Indicates the channel group.

**Set Power key**
Select Unlocked or Locked.
Set "Locked" to lock the power button to prevent the unit being turned off or muted unwittingly while using. Default is "Unlocked."

**Set Mute key**
If you want to mute the audio, please select “Enable” first and then short press the power button. Default is “Enable.”

**IR Match**
Set to match with the receiver. The screen will display “Matching” when in process. After successful matching, it will indicate “Sync finished.”

Backlight
Delay 10s

**Set Backlight**
Select ON, OFF or Delay 10 / 30 /60 seconds.
Default is “Delay 10s.”

Restore
Restore default

**Restore default setting**

Version
V1.1 2016-06-28

**Version of the UwMic15-TX-XLR15**

SN
UWMTX15160600001

**Serial Number**

# Operation Guide

## 1 Install the batteries

① UwMic15-RX15 and UwMic15-TX15. Batteries can be inserted in the plug-on transmitter UwMic15-SR-XLR15 in the same manner.

- Long press the Power key to turn the unit off.
- Slide the two catches inward and pull out the battery compartment.
- Insert two AA size batteries according to the polarity indicators and close the compartment. Please be sure the battery compartment is locked securely.

② UwMic15-SR-HM15

- Long press the power button to turn the power off.

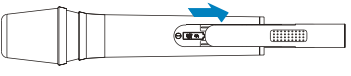

- Slide the battery compartment cover in the direction of the arrow, and completely pull it out.
- Insert two new AA batteries into the battery compartment with ⊕ and ⊖ polarities in the correct orientation.
- Close the battery cover, after inserting battery.

**Note:**

① Please remove the batteries from the battery compartment when the device is not used for a long time.

② Please always use sets of the same type of battery.

③ Replacing the batteries during operation may generate noise. Please make sure that the unit is turned off before replacing batteries.

## 2 Connect the receiver to the mic jack of a camera, camcorder or mixer with the supplied cable.

**3 Turn on the receiver by long pressing the power button.**

**4 Match the channel of receiver and transmitter**

① Using the auto scan function

**For the TX15 and SR-XLR15**

- Turn on the transmitter by long pressing the power button.
- Use the + or – button to display the “Match with TX” menu on receiver.

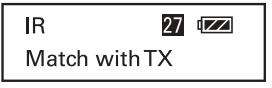


- Use the + or – button to display the "Match with RX" menu on transmitter.

- Both long press the SET button to select the menu and short press it to confirm.
- Place the infrared transmitter port on the receiver near the infrared detector on the transmitter.
- If "Sync finished!" displayed on the LCD screen of the receiver, the frequency for use on the transmitter is set.
- After matching successfully, press the SET button of receiver to return to the previous menu.

**For SR-HM15**

- Turn on the transmitter by long pressing the power button.
- Use the + or – button to display the “Match with TX” menu on receiver.

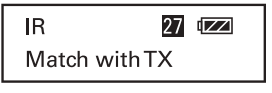


- Quick press the SET button twice, enter the matching pattern on the transmitter:

A: Short press to ajust the channel number
B: Quick press the SET button twice again, then exit with saving.

- Place the infrared transmitter port on the receive near the infrared detector on the transmitter.
- If "Sync finished!" displayed on the LCD screen, the frequency for use on the transmitter is set.

- After matching successfully, press the SET button of receiver to return to the previous menu.

**Note:**
① After 20 seconds have elapsed, the display returns to the home screen without saving.
② Some noise may occur when power is turned on, you could turn down the audio input level of devices connected to the receiver accordingly.

② Manually setting the transmitter channel. (Only available on the UwMic15-TX15 and UwMic15-SR-XLR15)

- Turn on the transmitter by long pressing the power button.
- Use the + or – button to display the channel setting menu on the transmitter.

Channel
CH 01 555.280MHz

- Long press the SET button to select the menu.

Use the + or – button to select the same channel as the receiver and confirm it by short press again to exit without saving.

**5 Attach the accessories you need for the receiver and transmitter. Refer to "Attaching Accessories" (page4 and page8).**

**6 You are ready to record.**

# Specification

## Transmitter TX15, SR-HM15, SR-XLR15

| | |
|---|---|
| Channel Number | 16 |
| Oscillator type | PLL synthesizer |
| Carrier frequencies | 555MHz - 579MHz |
| Reference deviation | ±5 kHz (–60 dBV, 1 kHz input) |
| Signal to noise ratio | 70 dB or more |
| Spur suppression | -60dB |
| Voice delay | 10 ms |
| Antenna | 1/4λ wire antenna |
| Audio input connector | TX15: 3.5mm mini jack |
| | HM15: None |
| | XLR15: XLR-3-11C type (female) |
| Reference audio input level | –60 dBV (MIC input, 0 dB attenuation) |
| Distortion | 0.5% or less |
| Weight | TX15: Approx. 68g (excluding batteries) |
| | HM15: Approx. 225g (excluding batteries) |
| | XLR15: Approx. 150g (excluding batteries) |
| Battery | Two AA size batteries |
| Dimensions | TX15: 180 x 64 X 23 mm |
| | HM15: 245.0 x 47.5 x 47.5 mm |
| | XLR15: 105.5 x 43 x 34.7 mm |
| Operating temperature | 0°C to 50°C |
| Storage temperature | –20°C to +55°C |

## Receiver RX15

| | |
|---|---|
| Channel number | 16 |
| Oscillator type | PLL synthesizer |
| Audio output connector | 3.5mm mini jack |
| Antenna | 1/4λ wire antenna |
| Audio output level | –60 dBV |
| Headphone output level | 30mW (16 Ω) |
| Receive frequencies | 555MHz - 579MHz |
| Receive sensitivity | -95dBm |
| Signal to noise ratio | 70 dB or more |
| Voice delay | 10 ms |
| Reference deviation | ±5 kHz(–60 dBV, 1 kHz input) |
| Frequency response | 40 Hz to 18 kHz (+/-3dB) |
| Distortion | 0.5% or less |
| Spur suppression | -60dB |
| Weight | Approx. 73g (excluding batteries) |
| Battery | Two AA size batteries |
| Dimensions | 180 × 64× 49 mm |
| Operating temperature | 0 °C to 50 °C |
| Storage temperature | –20 °C to +55°C |

# Packing List

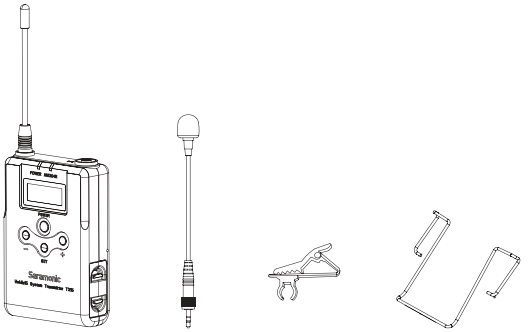


**TX15**

- Body-pack transmitter: TX15
- Omni-directional lavalier microphone
- Microphone holder clip
- Wind screen
- Belt clip

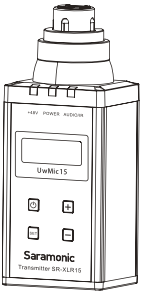


**SR-XLR15**

- Plug-on transmitter: SR-XLR15

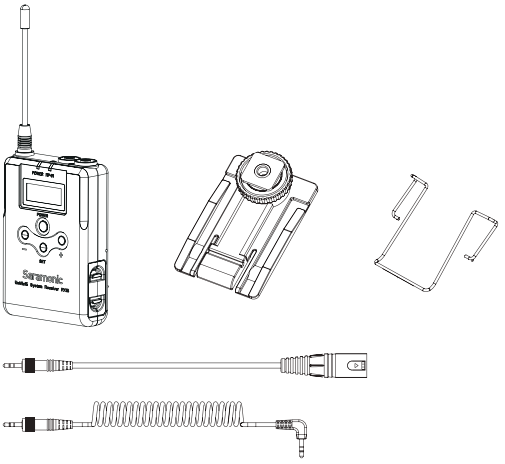


**RX15**

- Portable receiver: RX15
- Shoe mount adapter
- Belt clip
- XLR to 3.5mm locking-type plug audio output cable
- 3.5mm locking-type plug audio cable

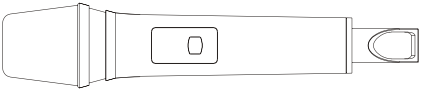

**SR-HM15**

- Hand-held microphone: SR-HM15

**Warranty card**
**User manual**

For better recording experience, the app-lication **SmartRecorder** is recommended.

为获得更好的录制体验，推荐使用枫笛 Saramonic 自主研发应用软件 **SmartRecorder**。

Download on the App Store

GET IT ON Google Play

Please follow our WeChat account for more details.

扫描二维码关注枫笛Saramonic微信公众号。

www.saramonic.com

Saramonic is a trademark registered and owned by Shenzhen DSQN Investment CO., LTD.
COPYRIGHT 2011-2021 SARAMONIC INTERNATIONAL ( A brand of DSQN )

Room 2009, Shenzhou Bairuida Bldg, Banxuegang Road, Bantian Street, Longgang District, Shenzhen, China 518129 Tel: 400-613-1096 Email: info@saramonic.com

**深圳市大盛青牛投资有限公司**

广东省深圳市龙岗区坂雪岗大道百瑞达大厦A栋2009室

全国服务热线：400-613-1096

中国制造 Made in China