KINGSTON

TO ORDER PARTS, CALL: 1-877-252-7277
www.kingstonbrass.com

VTPN543419T

54" Acrylic Anti-Skid Drop-In Tub

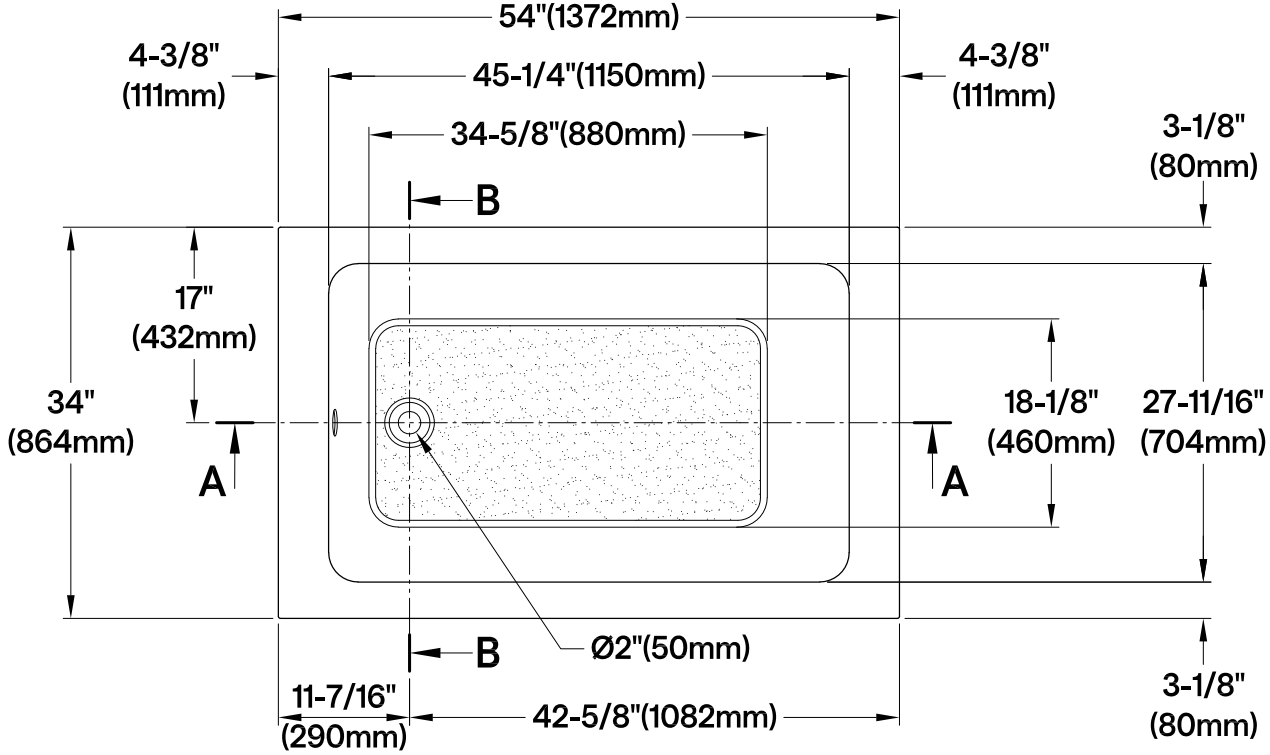

Drain Hole Size
(Scale 3:1)

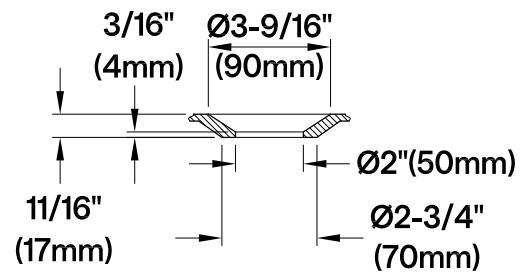

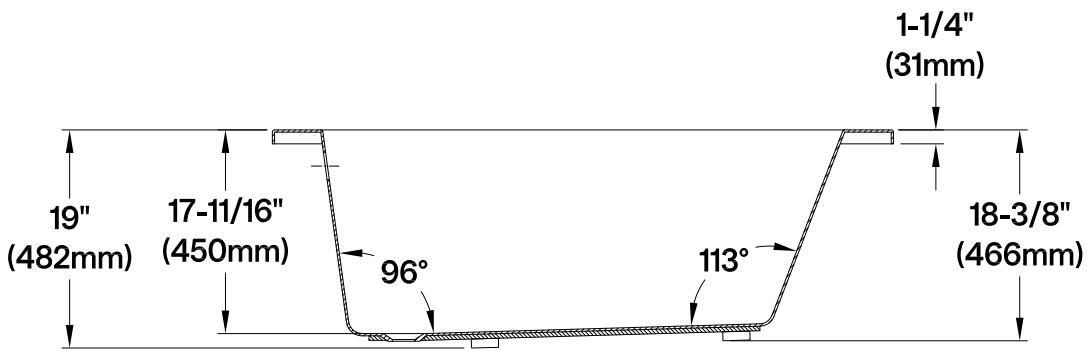

Section A-A

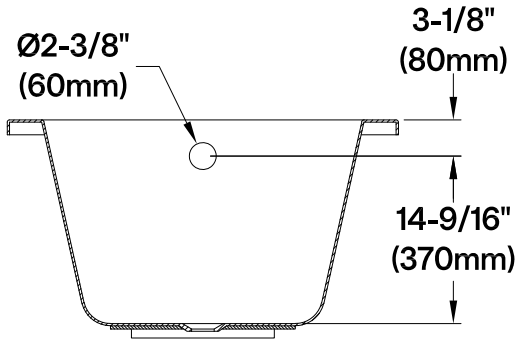

Section B-B

2025-08-A