SHIMANO

SIENNA

SN2500HGFG

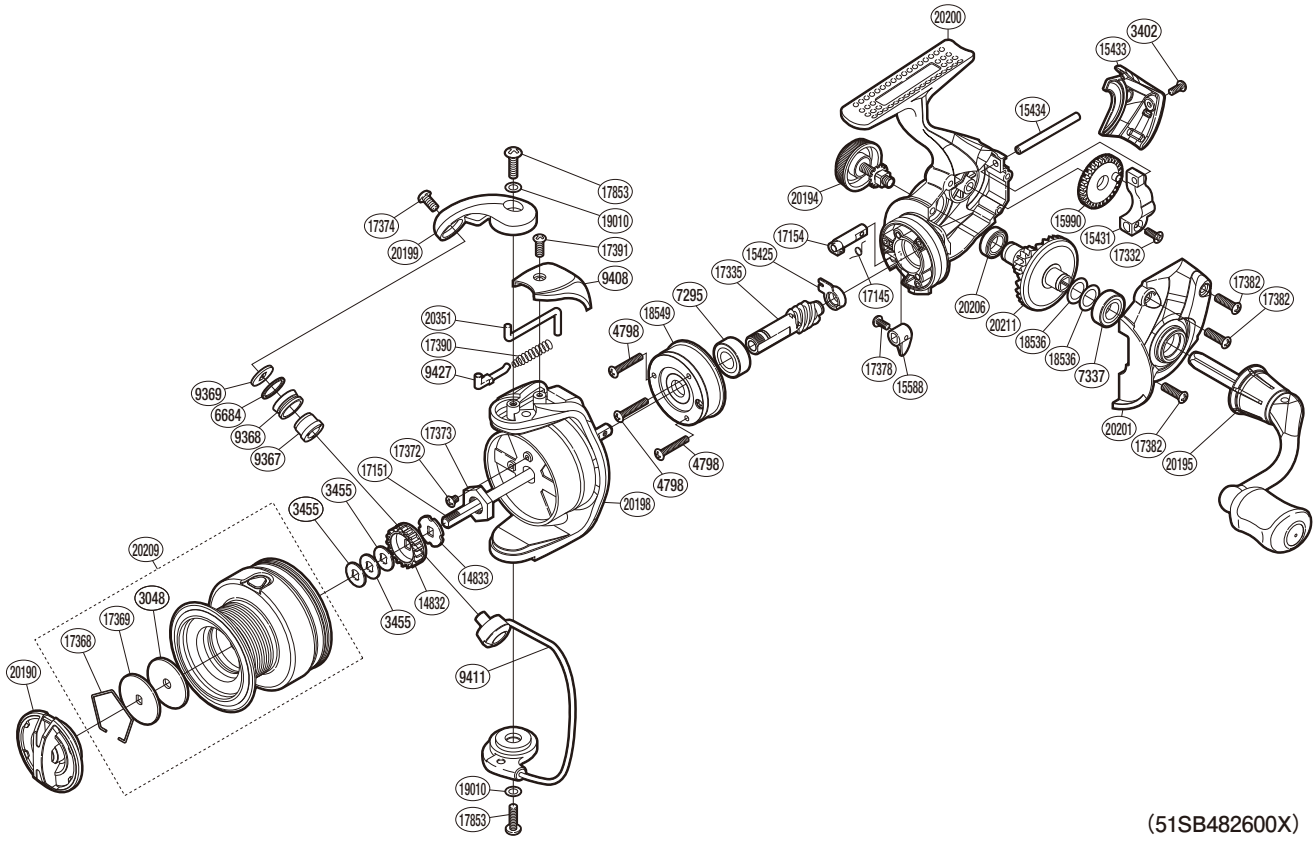

(51SB482600X)

#	Part No.	Description	#	Part No.	Description	#	Part No.	Description
3048	1031C	Drag Washer	15433	10NKK	Rear Protector	17391	10LFK	Screw
3402	103ND	Screw	15434	1035A	Oscillating Guide	17853	10LFH	Screw
3455	10BXN	Spool Washer	15588	10AP0	Anti-reverse Lever	18536	1003B	Washer
4798	103C6	Screw	15990	10G9N	Oscillating Gear	18549	1003H	Roller Clutch Assembly
6684	10KFD	Line Roller Spacer	17145	105B4	Anti-reverse Cam Spring	19010	100MF	Washer
7295	107FC	Ball Bearing	17151	103NT	Main Shaft	20190	101K3	Drag Knob
7337	107AR	Ball Bearing	17154	1053S	Anti-reverse Cam	20194	1026B	Handle Screw Cap
9367	10PFE	Line Roller Bushing	17332	10R1P	Screw	20195	1026A	Handle Assembly
9368	10JLF	Line Roller	17335	10R2T	Pinion Gear	20198	1026D	Rotor
9369	10PFP	Line Roller Washer	17368	10MZM	Drag Washers Retainer	20199	101K1	Bail Arm
9408	10DD9	Bail Spring Cover	17369	10N23	Key Washer	20200	10266	Body
9411	10Q9J	Bail Assembly	17372	10LCE	Screw	20201	101K4	Side Cover
9427	105LT	Bail Spring Guide	17373	10817	Rotor Nut	20206	10SNQ	Ball Bearing
14832	103MU	Spool Support A	17374	10K90	Screw	20209	1026E	Spool Assembly
14833	10J04	Spool Support B	17378	10L1R	Screw	20211	10RTS	Drive Gear
15425	1074K	Pinion Gear Bushing	17382	10L6J	Screw	20351	10SUD	Bail Trip Lever
15431	10G7D	Oscillating Slider	17390	10FVC	Bail Spring			

Please note that the number of adjusting washers may not be the same as shown in the exploded views.
(Adjustment will vary with each individual product.)

(230823)_002