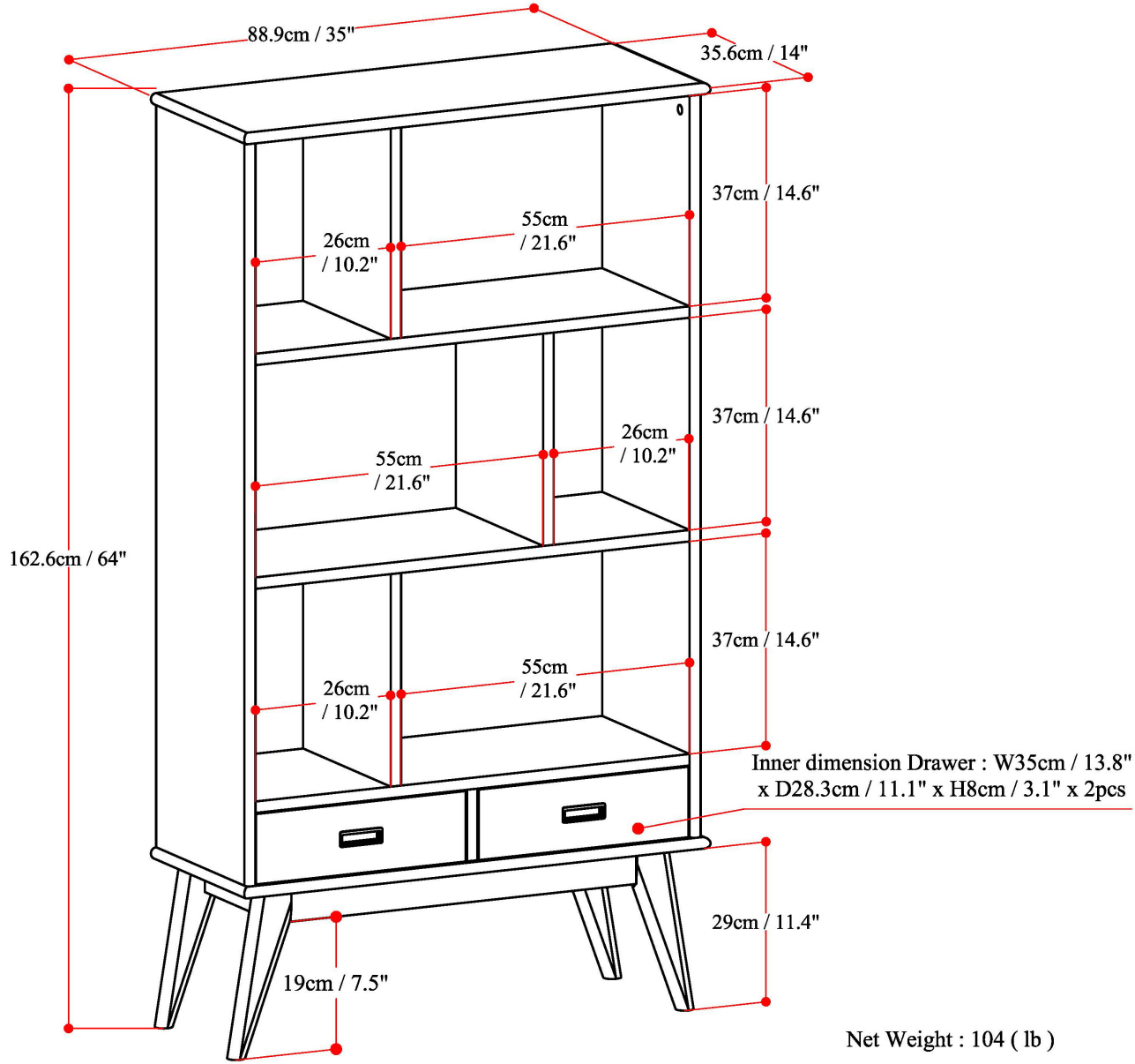

Net Weight : 104 (lb)