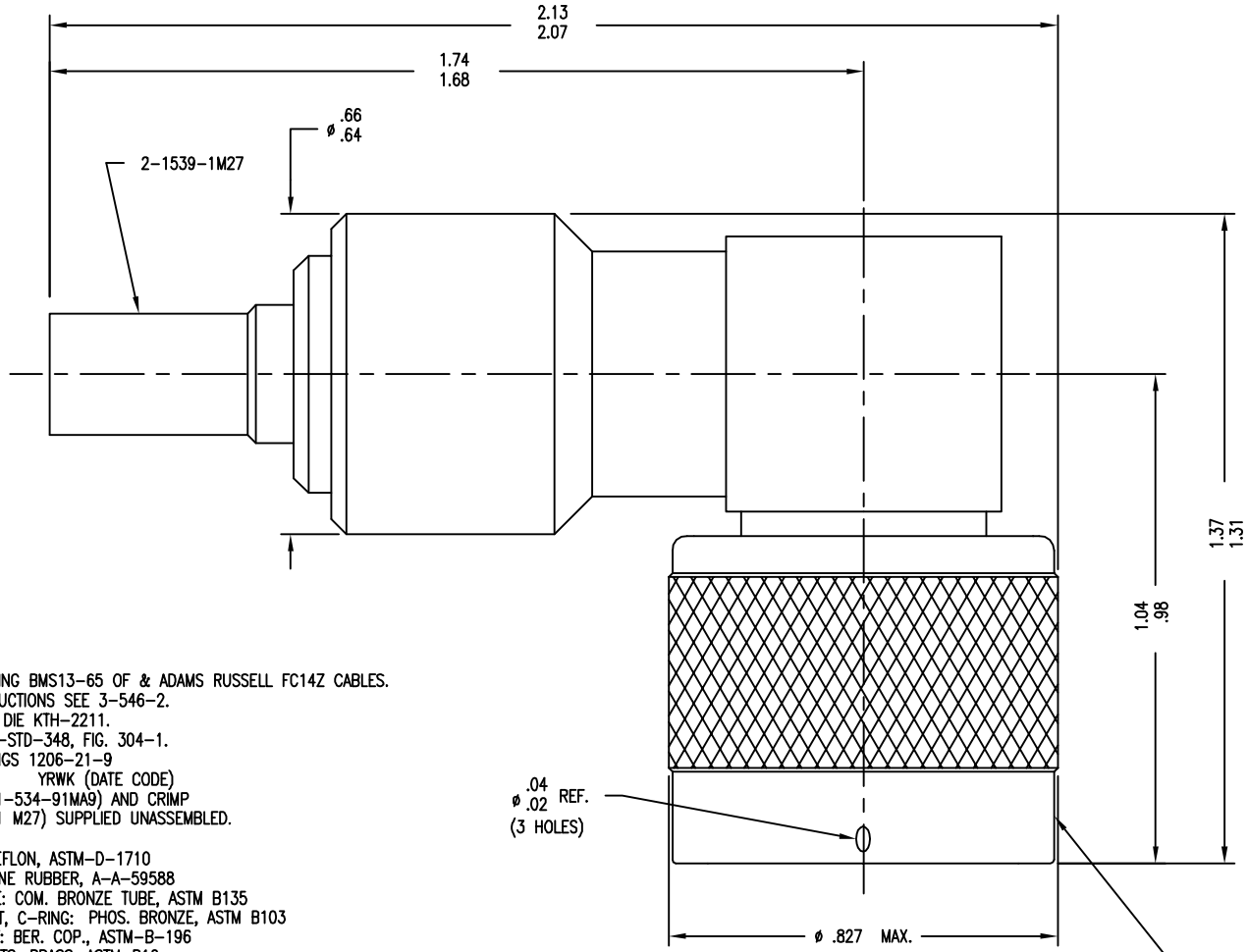

NOTES:
1. FOR USE WITH BOEING BMS13-65 OF & ADAMS RUSSELL FC14Z CABLES.
2. FOR CABLING INSTRUCTIONS SEE 3-546-2.
3. FOR CRIMPING USE DIE KTH-2211.
4. INTERFACE PER MIL-STD-348, FIG. 304-1.
5. MARK PACKAGE: KINGS 1206-21-9
   YRWK (DATE CODE)
6. CENTER CONTACT (1-534-91MA9) AND CRIMP SLEEVE (2-1539-1 M27) SUPPLIED UNASSEMBLED.
7. MATERIALS:
   INSULATORS: TEFLON, ASTM-D-1710
   GASKET: SILICONE RUBBER, A-A-59588
   K-GRIP SLEEVE: COM. BRONZE TUBE, ASTM B135
   OUTER CONTACT, C-RING: PHOS. BRONZE, ASTM B103
   CRIMP CONTACT: BER. COP., ASTM-B-196
   ALL OTHER PARTS: BRASS, ASTM-B16
8. FINISHES:
   CONTACTS: .000050 MIN GOLD PLATE, PER ASTM-B-488 OVER .000050 MIN NICKEL PER AMS-QQ-N-290 (RoHS)
   OUTER CONTACT: .000200 MIN SILVER PER ASTM-B-700 OVER .000020 MIN COPPER PER ASTM B734 (RoHS)
   ALL OTHER METAL PARTS: .000050 MIN NICKEL PER AMS-QQ-N-290 OVER .000050 MIN COPPER PER ASTM B734 (RoHS)
9. ELECTRICAL CHARACTERISTICS:
   NOMINAL IMPEDANCE: 50 OHMS
   VOLTAGE RATING: 1000 VRMS
   FREQUENCY RANGE: DC TO 11 GHz
10. WEIGHT: 76.7 GRAMS

1206-21-9

REVISIONS

ISSUE	CHANGES
0	ER 34034 KH 08/06/92
1	CN 34086 E MJB 08/19/92
2	CN 374337 A VLS 09/09/98
3	CN 38324 E TML 06/19/01
4	CN 39510 C DRK 06/28/06
F	REVISED PER DMF304 & ER34270 CY 09/02/11
G	REVISED PER ER35177 CY 09/28/11

CUSTOMER SALES DRAWING

THIS DRAWING, THE DESIGNS AND IDEAS EMBODIED IN THE DEVICE TO WHICH IT RELATES, AND THE METHOD OF PRODUCING THE DEVICE, ARE THE PROPERTY OF WINCHESTER ELECTRONICS CORPORATION AND SHALL NOT BE EMPLOYED, COPIED, OR DISCLOSED TO ANYONE, IN ANY MANNER WITHOUT THE CONSENT OF WINCHESTER ELECTRONICS CORPORATION.

SCALE 4:1

APPROX SURFACE AREA

WAS: E-17521

CAGE CODE: 91836

REF: BOEING

PLUG, ANGLE, N

DRAWN	JCA	DATE	07/15/92
DESIGN	JT	DATE	07/17/92
APPR.		DATE	

KINGS by WINCHESTER ELECTRONICS

Winchester Electronics
62 Barnes Industrial
Road North
Wallingford, CT 06492

B SIZE

1206-21-9