SHIMANO

STELLA S A-RB

STL-SW18000HG

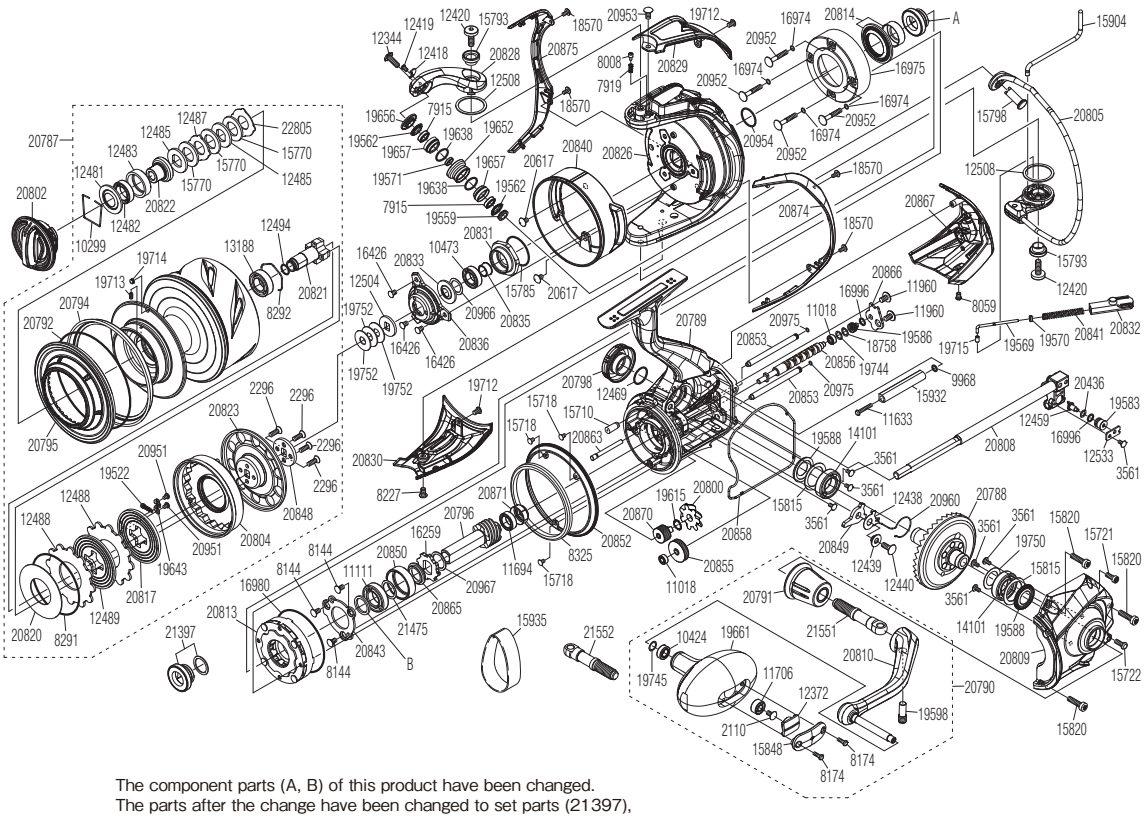

The component parts (A, B) of this product have been changed.
The parts after the change have been changed to set parts (21397),
and the parts before the change have been discontinued.
If you need the A or B parts, order them as a set part (21397) and replace the entire set.
If you need to replace it for maintenance etc., it is recommended that you leave it at the store.
Please note that the number of adjusting washers may not always be the same as shown in the exploded views.
(51SF24X182X) Please note that your actions take full responsibility when you take it apart.

#	Part No.	Description	#	Part No.	Description	#	Part No.	Description
2110	103E9	Screw	16259	107ZQ	Ratchet	20826	10128	Rotor
2296	10MLB	Screw	16426	103LB	Screw	20828	1012L	Bail Arm
3561	10MT4	Screw	16974	10LAD	O Ring	20829	1012A	Bail Spring Cover
7915	104W1	Ball Bearing	16975	10MHD	Clutch Water Proof Cover	20830	1012G	Bail Hold Support Guard
7919	1077Q	Click Spring	16980	10MLR	Clutch Cover Water Proof	20831	10SEP	Rotor Nut
8008	10CH8	Click Pin	16996	10TNF	O Ring	20832	10SEN	Bail Spring Guide B
8059	10L9D	Screw	18570	10MT2	Screw	20833	10SFJ	Bearing Water Proof
8144	10ML2	Screw	18758	10TK0	Washer	20835	10SR4	Spacer
8174	103NM	Screw	19522	10E90	Drag Click Assembly	20836	10RBZ	Retainer
8227	10CYT	Screw	19559	1014N	Collar	20840	10125	Rotor Brim
8291	108WD	O Ring	19562	1016K	Line Roller Seal	20841	10SEV	Bail Spring
8292	10LWM	Bearing Retainer	19569	1016J	Bail Spring Guide A	20843	10SFC	Bearing Retainer
8325	104AZ	Friction Ring	19570	10DUU	Spring Guide A Support Collar	20848	10SQJ	Spool Support B
9968	108W9	O Ring	19571	1014P	Collar	20849	10SQW	Stopper
10299	10B6K	Retainer	19583	10164	Collar	20850	10SR8	Bearing Housing
10424	105BN	Ball Bearing	19586	1015D	Bushing	20852	1012P	Body Flange Ring
10473	104PS	Ball Bearing	19588	1015Q	Bearing Water Proof	20853	10SQL	Oscillating Guide
11018	10PDA	Ball Bearing	19598	10E85	Screw	20855	10SEQ	Idle Gear
11111	104PV	Ball Bearing	19615	10160	Washer	20856	10SR3	Worm Shaft
11633	10LSC	Screw	19638	1015S	O Ring	20858	10SR7	Body Seal
11694	10583	Ball Bearing	19643	1017R	Spring Holder	20863	10SQN	Idle Gear Shaft
11706	10KX1	Ball Bearing	19652	1015F	Line Roller	20865	10SRD	Pinion Gear Collar
11960	103H6	Screw	19656	10161	Line Roller Plate	20866	10SF9	Worm Shaft Retainer
12344	10K46	Screw	19657	1015A	Bushing	20867	1012J	Rear Protector
12372	10B97	Handle Knob Seal	19661	10RDQ	Handle Knob	20870	10SF8	Idle Gear (Small)
12418	107LE	Retainer	19712	10DN7	Screw	20871	10SF4	Bushing
12419	107LF	Screw	19713	10PVL	Set Screw	20874	10129	Rotor Guard A
12420	10Q86	Screw	19714	10EAG	Spool Ring Pin	20875	10121	Rotor Guard B
12438	102VH	Stopper Cover	19715	10R2F	Bail Spring Guide A Bush	20951	10SC7	Screw
12439	10J3U	Collar	19744	100XZ	Washer	20952	10RP7	Screw
12440	103HM	Screw	19745	104FH	Washer	20953	10SCS	Screw
12459	106V5	Oscillating Pawl	19750	101DP	Washer	20954	1027V	O Ring
12469	108WP	O Ring	19752	101DM	Spool Washer A	20960	100SL	Stopper Spring
12481	10LQZ	Waterproof Sheet	20436	100CW	Washer	20966	10HU1	Washer
12482	10KX7	Ball Bearing	20617	10E8M	Screw	20967	10GD6	Washer
12483	10LWS	Bearing Bushing	20787	10SFU	Spool Assembly	20975	10B0V	O Ring
12485	10BA1	Key Washer	20788	10SFH	Drive Gear Assembly	21397	10U05	Roller Clutch Inner Assembly
12487	10BEB	Eared Washer	20789	10DT8	Body Assembly	21475	10T1K	Washer
12488	10C18	Drag Washer B	20790	10SFV	Handle Assembly	21551	10RFY	Handle Shaft
12489	10BS6	Drag Disk A	20791	10DT9	Handle Shaft Cover Assembly	22805	1461Z	Eared Washer
12494	108WQ	O Ring	20792	10SQX	O Ring			
12504	10J3W	Spool Support A	20794	10SEZ	Spool Ring	A	10669	Roller Clutch Inner
12508	10J7H	Washer	20795	10RMT	Collar	B	10SEY	Washer
12533	10H7S	Oscillating Pawl Cover	20796	10SFA	Pinion Gear			
13188	10BGD	Ball Bearing	20798	10SFB	Handle Screw Cap			
14101	104PW	Ball Bearing	20800	10SQM	Idle Gear (Large)			
15710	10AYR	Body Flange Seal	20802	10SRT	Drag Knob Assembly			
15718	1055G	Screw	20804	1012Z	Drag Cover Assembly			
15721	10A6N	Screw	20805	10DTC	Bail Assembly			
15722	10A6P	Screw	20808	1012V	Main Shaft Assembly			
15770	10344	Drag Washer A	20809	1012W	Side Cover Assembly			
15785	10CG0	Nut Water Proof	20810	10DTD	Handle Shank Assembly			
15793	10K7M	Collar	20813	10SRU	Roller Clutch Assembly			
15798	10Q3F	Line Roller Support	20814	1012Y	Roller Clutch Waterproof Assembly			
15815	10BGG	Washer	20817	10SFD	Drag Disk B			
15820	10PVN	Screw	20820	10SET	Drag Washer C			
15848	108T1	Handle Knob ID Plate	20821	10SQZ	Bearing Bushing			
15904	106KJ	Bail Trip Lever	20822	1011U	Bearing Support	15935	109UX	Belt (L) (accessory)
15932	10AYM	Collar	20823	10SR1	Heat Sink	21552	10RFH	Handle Shaft (Right) (accessory)