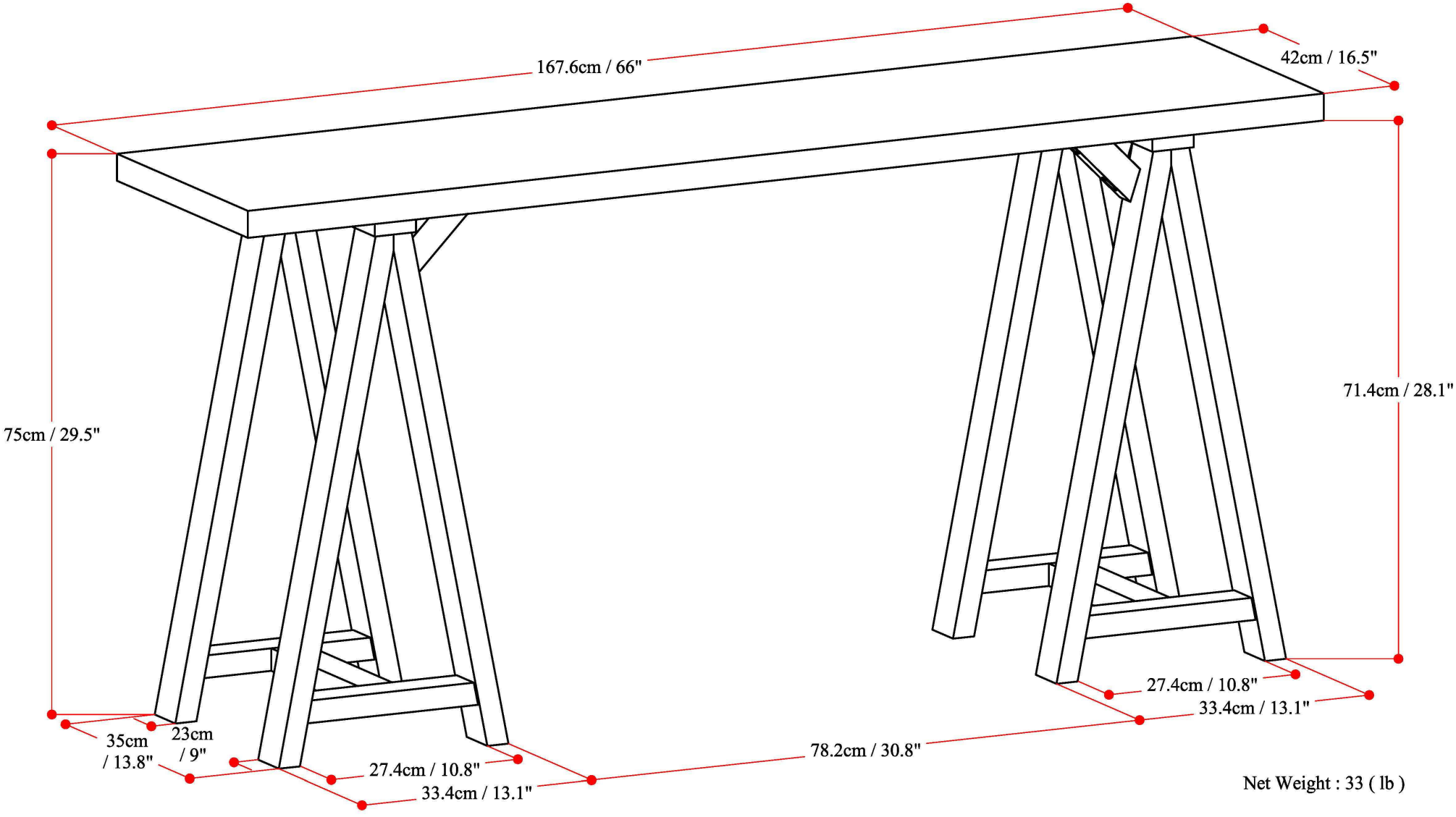

Net Weight : 33 (lb)