SHIMANO

Bantam

22BTMXR

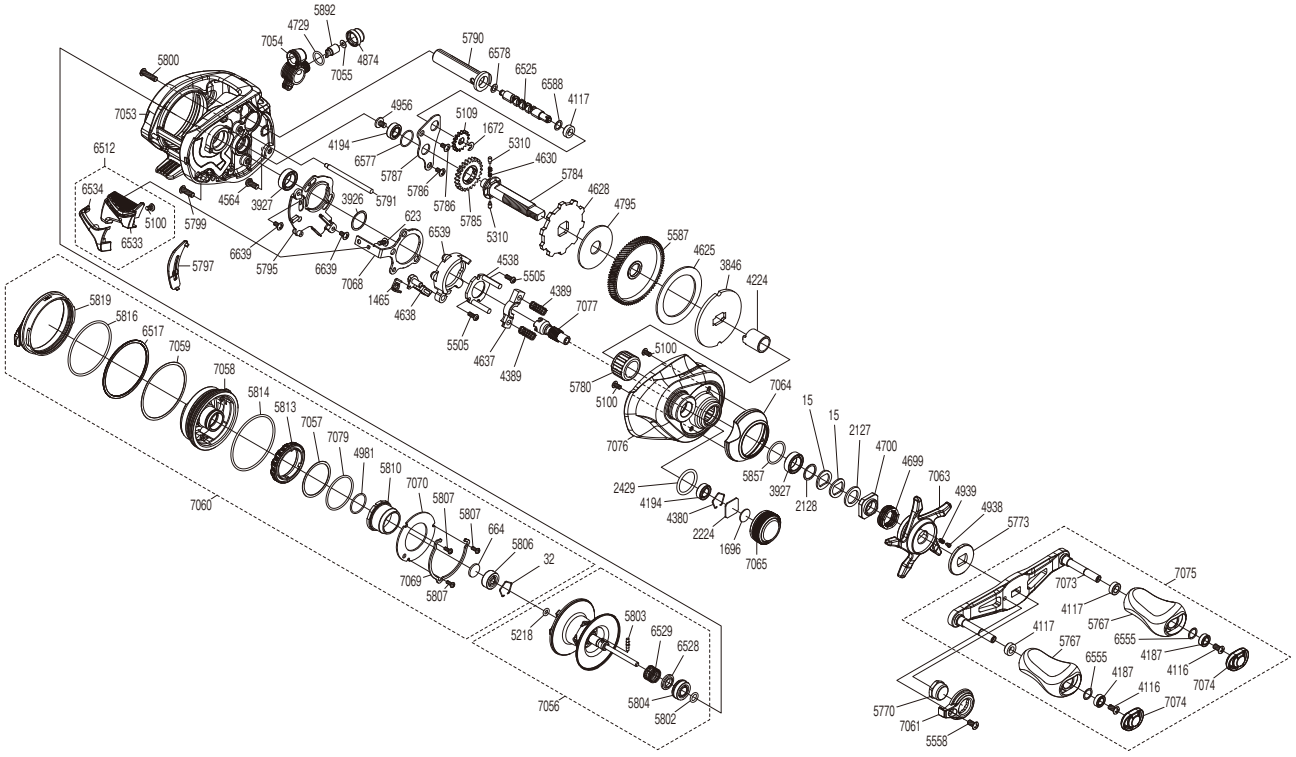

(51RL505A40X)

#	Part No.	Description	#	Part No.	Description	#	Part No.	Description
0015	10D60	Drag Spring Washer	4981	10LA8	O Ring	6525	10EET	Worm Shaft
0032	10GEW	Bearing Retainer	5100	1055J	Screw	6528	10SWZ	Bushing
0623	103C0	Screw	5109	10FNX	Idle Gear	6529	10SJF	Bearing Pressure Spring
0664	1057S	Spacer B	5218	10EZ7	O Ring	6533	10RLD	Clutch Button
1465	10N1Z	Clutch Pawl Spring	5310	10HJG	Idle Gear Pin	6534	10RNZ	Clutch Button Cover
1672	105NC	E Lock	5505	10LVJ	Screw	6539	10SX6	Clutch Cam
1696	10896	Cast Control Spacer	5558	10R1Q	Screw	6555	104FH	Washer
2127	10J1N	Star Drag Spacer	5587	1021M	Drive Gear	6577	10SZ4	O Ring
2128	105PW	Bearing Washer	5767	10SSM	Handle Knob	6578	10GFG	Washer
2224	1085F	Cast Control Spacer	5770	1007H	Handle Nut	6588	100T8	Washer
2429	108WK	O Ring	5773	1007F	Star Drag Click Plate	6639	100BD	Screw
3846	10D3N	Pressure Plate	5780	1005E	Roller Clutch Bearing	7053	101PY	Frame Assembly
3926	10G8C	Washer	5784	10059	Drive Shaft	7054	101PW	Line Guide Pawl Holder Assembly
3927	10EX8	Ball Bearing	5785	10057	Idle Gear	7055	10T9Y	Washer
4116	103E9	Screw	5786	10MT4	Screw	7056	101PX	Spool Assembly(With Bearing)
4117	10PXY	Bushing	5787	1005S	Drive Shaft Retainer	7057	10T9R	Washer
4187	104VX	Ball Bearing	5790	1005Z	Level Wind Guard	7058	101PV	Dial Case Assembly
4194	105BP	Ball Bearing	5791	1006J	Level Wind Guide	7059	10E72	Washer
4224	10BN3	Roller Clutch Inner Tube	5795	1001J	Clutch Guard	7060	10E70	Left Side Plate Assembly
4380	1057X	Retainer	5797	1000Z	Clutch Bar Guide	7061	10S80	Handle Nut Plate
4389	104BU	Yoke Spring	5799	101GQ	Screw	7063	100PT	Star Drag
4538	10F42	Clutch Cam Retainer	5800	103LN	Screw	7064	100PU	Clutch Button Attachment
4564	10LZD	Screw	5802	10TNF	O Ring	7065	10TA3	Cast Control Cap
4625	106XT	Drag Washer	5803	10MD0	Spool Clutch Pin	7068	10T9H	Clutch Plate
4628	10D6Y	Anti-Reverse Ratchet	5804	1005D	Ball Bearing	7069	10TUC	Cam Lever Retainer
4630	10JDX	Idle Gear Spring	5806	10S37	Ball Bearing	7070	10RDM	Br Dial Retainer Plate
4637	1046T	Yoke	5807	1026U	Screw	7073	10E11	Handle Shank Assembly
4638	105ZU	Clutch Pawl	5810	10TB6	Brake Pipe Gear Assembly	7074	1005A	Handle Knob Seal
4699	10A71	Star Drag Spring	5813	1000Y	Br Dial	7075	10E12	Handle Assembly
4700	10A0B	Star Drag Nut	5814	108WZ	O Ring	7076	10TRT	Right Side Plate
4729	108WQ	O Ring	5816	1006P	O Ring	7077	10TAN	Pinion Gear
4795	10CJ1	Drag Washer	5819	10013	Left Side Plate Cam Lever	7079	10CG0	O Ring
4874	10FJB	Pawl Cap	5857	1027V	O Ring			
4938	10B27	Click Pin	5892	10211	Line Guide Pawl			
4939	10988	Click Spring	6512	100J3	Clutch Button Assembly			
4956	10PVT	Screw	6517	10SKT	Washer	4692	10LQ0	B-100 Oil (Accessory)

Please note that the number of adjusting washers may not be the same as shown in the exploded views.
(Adjustment will vary with each individual product.)

(230904)_004