REV	DESCRIPTION	BY DATE	APPD
A	EWR07-ER5158	RDG 11/12/07	WPM 11/13/07

NOTES: UNLESS OTHERWISE SPECIFIED

1. FOR GENERAL SERIES SPECIFICATIONS, SEE SD10-0000.

2. MATERIAL SPECIFICATIONS:
   SHELL: STEEL PER ASTM A568
   INSULATOR: HIGH TEMP THERMOPLASTIC (MUST WITHSTAND 250°C FOR 90 SECONDS)
   BRACKETS: STEEL PER ASTM A568
   BOARDLOCKS: PHOSPHOR BRONZE PER ASTM B139
   CLINCHNUTS: BRASS PER ASTM B16
   SEE CONTACT SALES DRAWING FOR CONTACT SPECIFICATION

3. FINISH SPECIFICATIONS:
   SHELL: TIN PLATED PER ASTM B545 (RoHS COMPLIANT)
   INSULATOR: BLACK
   BRACKETS: TIN PLATED PER ASTM A545 (RoHS COMPLIANT)
   BOARDLOCKS / CLINCHNUTS: TIN PLATED PER ASTM B545 (RoHS COMPLIANT)
   SEE CONTACT SALES DRAWING FOR CONTACT SPECIFICATION

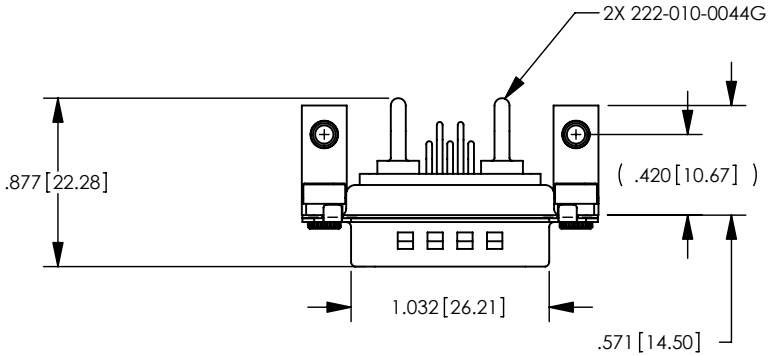

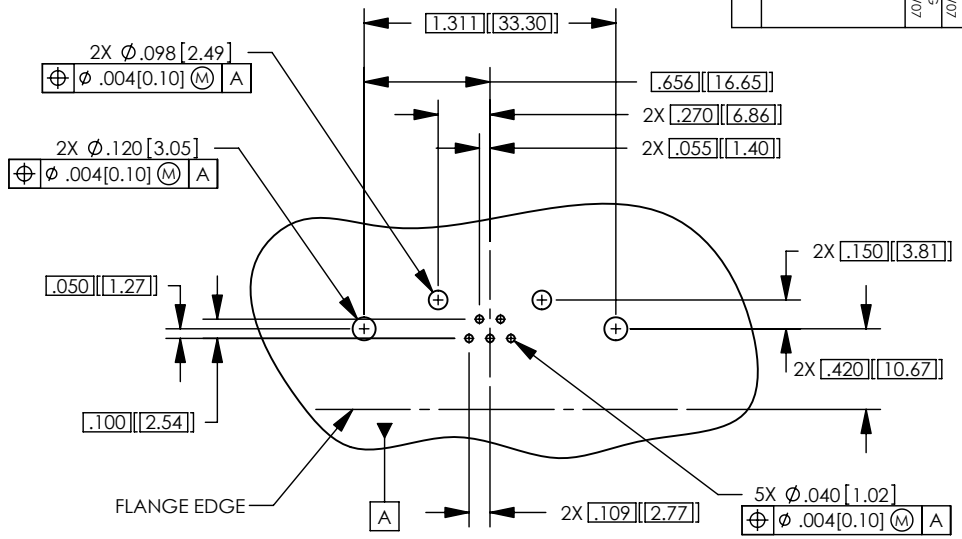

RECOMMENDED HOLE LAYOUT
FOOTPRINT COMPONENT SIDE
PCB THICKNESS: .094 MAX.

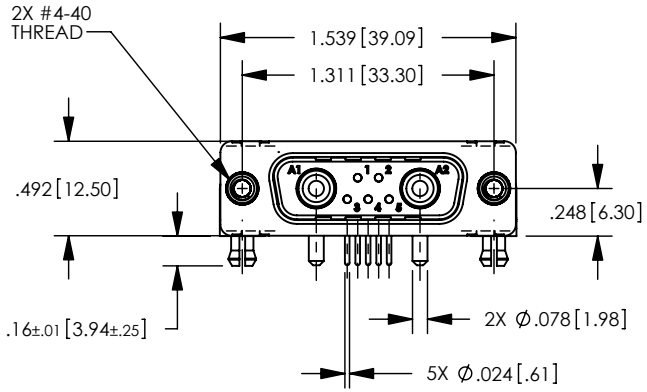

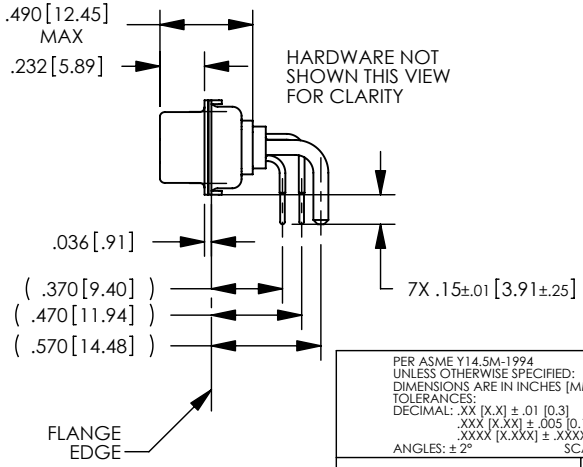

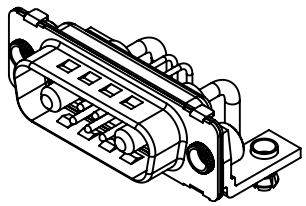

CATALOG P/N: RM7W2P-1016

PER ASME Y14.5M-1994
UNLESS OTHERWISE SPECIFIED:
DIMENSIONS ARE IN INCHES [MM]
TOLERANCES:
DECIMAL: .XX [X.X] ± .01 [0.3]
.XXX [X.XX] ± .005 [0.13]
.XXXX [X.XXX] ± .XXXX
ANGLES: ± 2° SCALE: X:X

CUSTOMER DRAWING

DRAWN	DATE	APPROVED	DATE
RDG	11/12/07	WPM	11/12/07
APPROVED	DATE	APPROVED	DATE
JC	11/12/07	XXX	XX/XX/XX

WinchesterElectronics
Winchester Electronics Corporation
62 Barnes Industrial Road North
Wallingford, Connecticut 06492

7W2P RIGHT ANGLE D-SUB (RoHS)

A | SDRM7W2P-1016 | SHT 1 OF 1 | REV A