KINGSTON

TO ORDER PARTS, CALL: 1-877-252-7277
www.kingstonbrass.com

VTPN672817

67" Acrylic Drop-In Tub

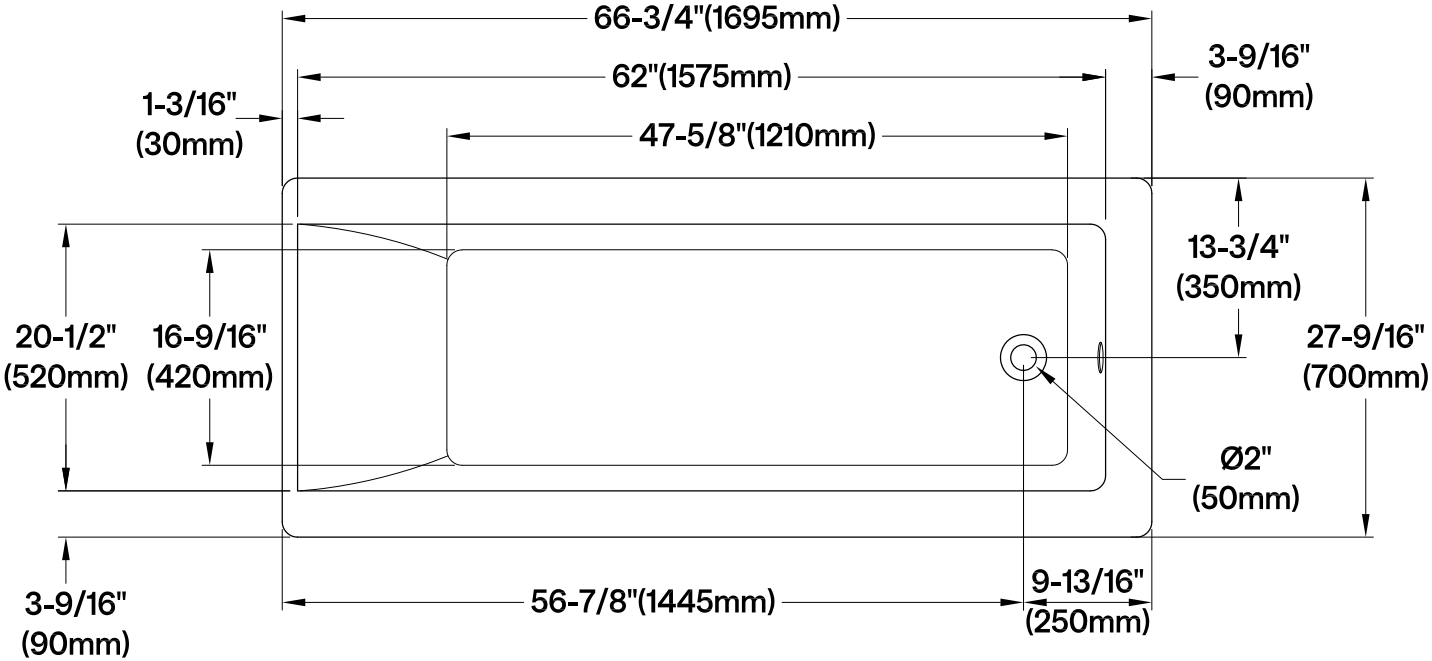

Drain Hole Size
(Scale 3:1)

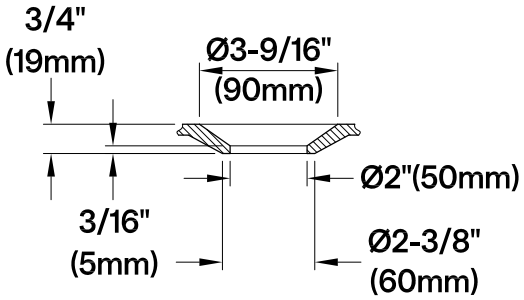

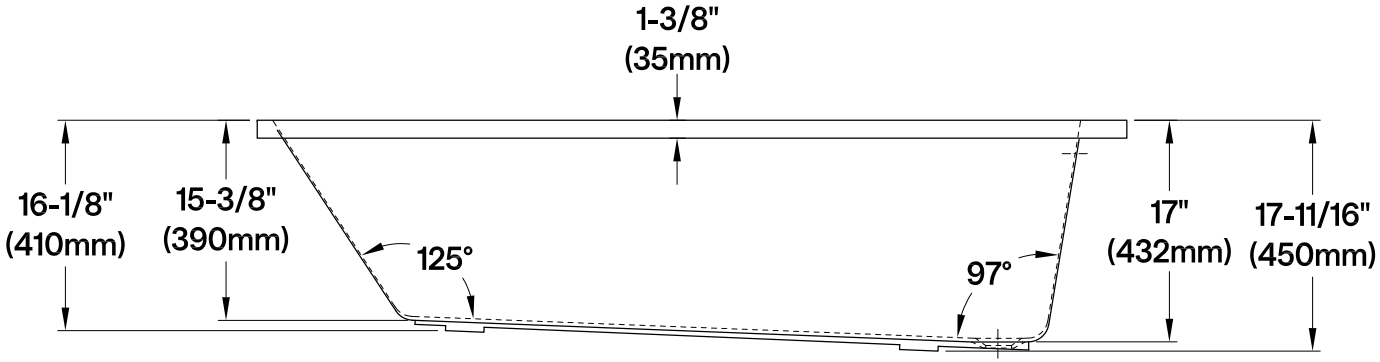

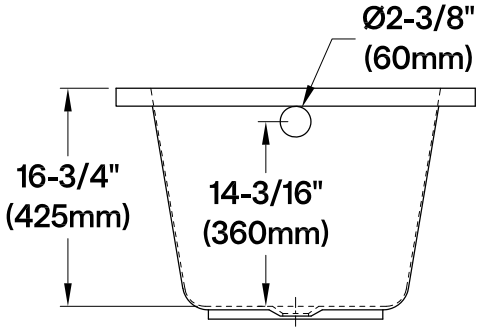

2025-09-B