Metropol
4-Hole Roman Tub Set Trim with Lever Handles and 1.75 GPM Handshower
Finishes : **matte black** Part no. : **32557671**

Description

Features

- Flow: 6.0 GPM (22.7 L/Min)
- 90° ceramic valves
- Integrated double backflow prevention
- MASS/Massachusetts
- DOE/FTC
- TECQ/Texas Registered
- CEC/California/Watersaving
- WaterSense/IAPMO/7286/Showers

Technology

Quick Clean

Compliance

WaterSense Meets EPA Criteria Certified by IAPMO R&T

UPC C ®

Product image
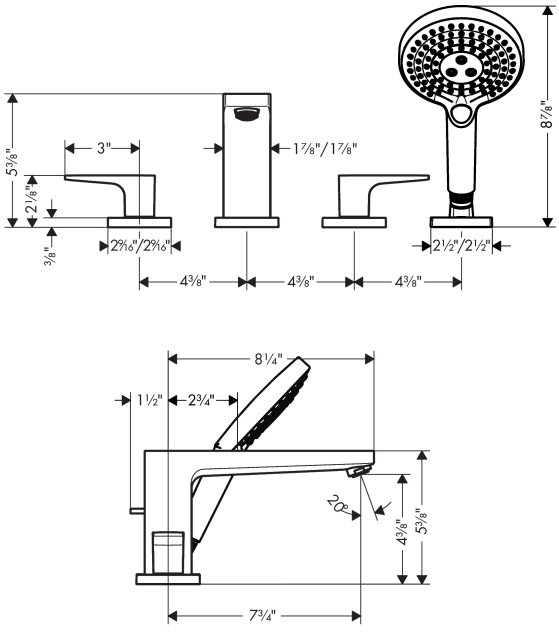
Scale drawing