KINGSTON

TO ORDER PARTS, CALL: 1-877-252-7277
www.kingstonbrass.com

VTAP6031R21C

60" Acrylic Anti-Skid Alcove Tub with Right Hand Drain Hole

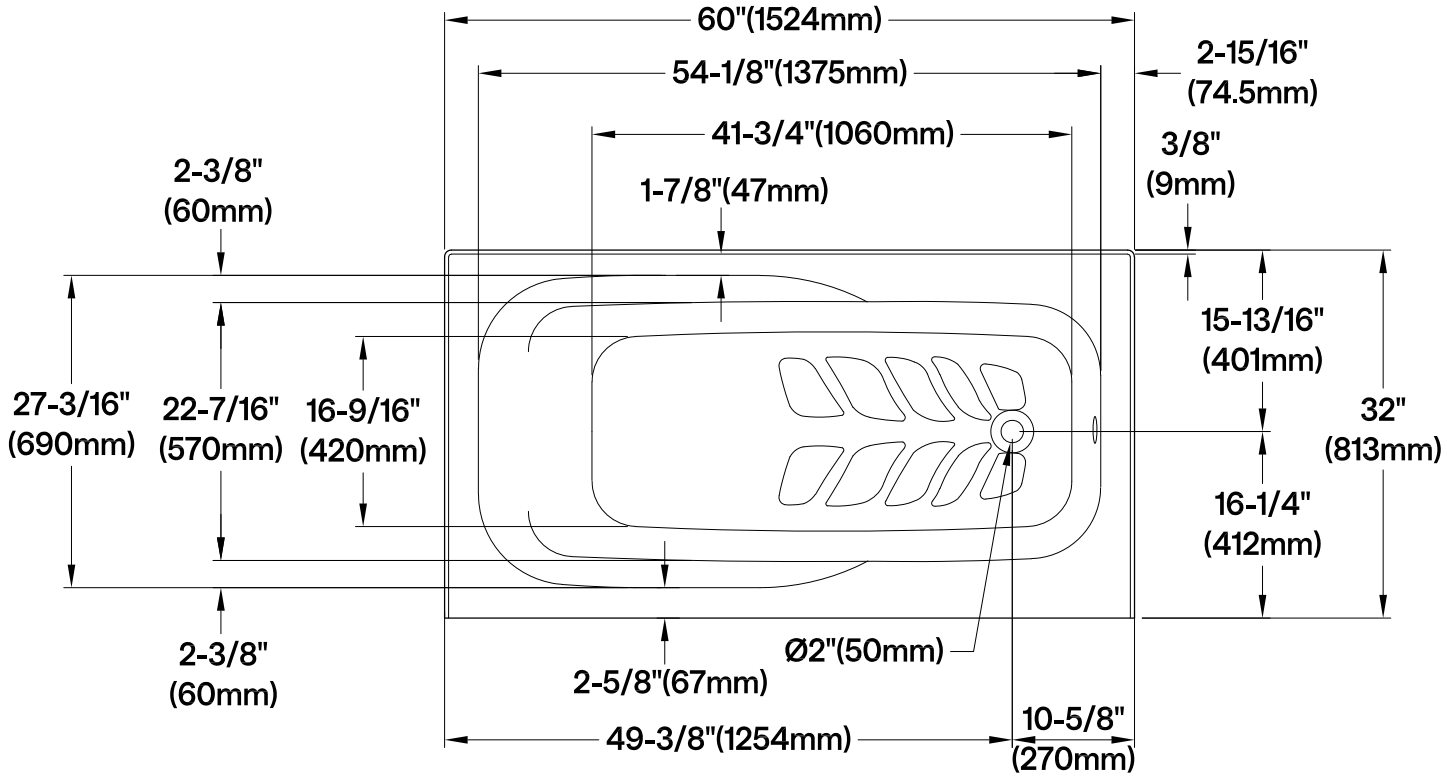

M10 x 60 (2 pcs)
M10 x 45 (2 pcs)

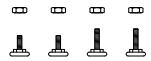

Drain Hole Size
(Scale 3:1)

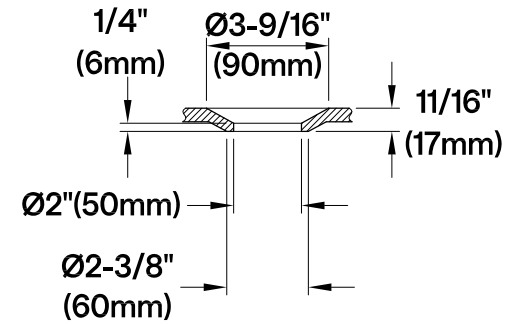

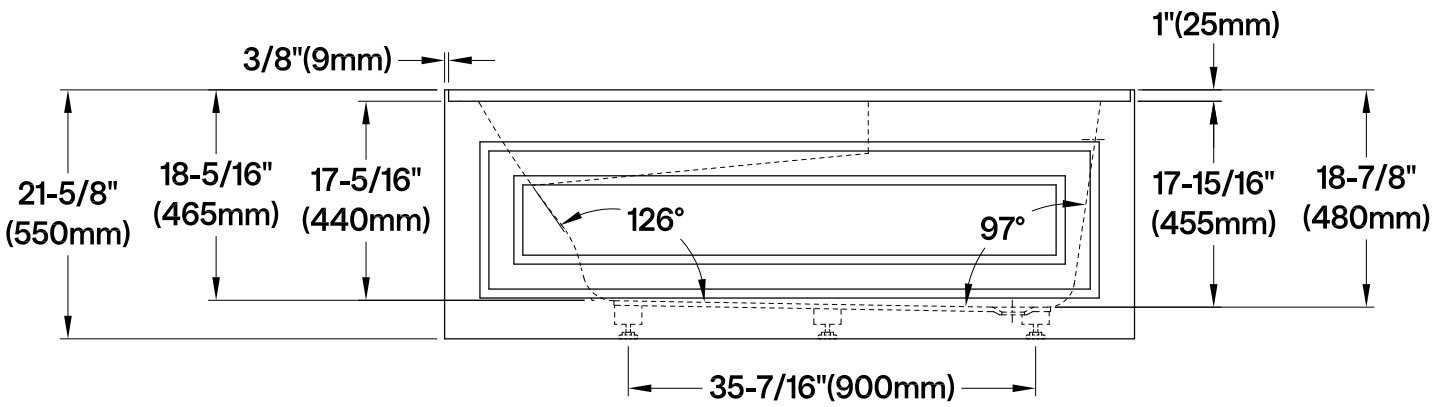

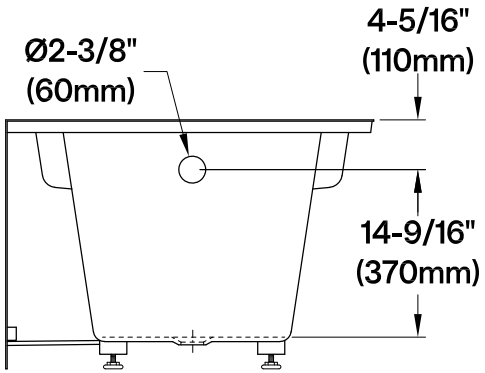

2025-07-A