# SHIMANO

## SPHEROS

## SP-SW6000HG

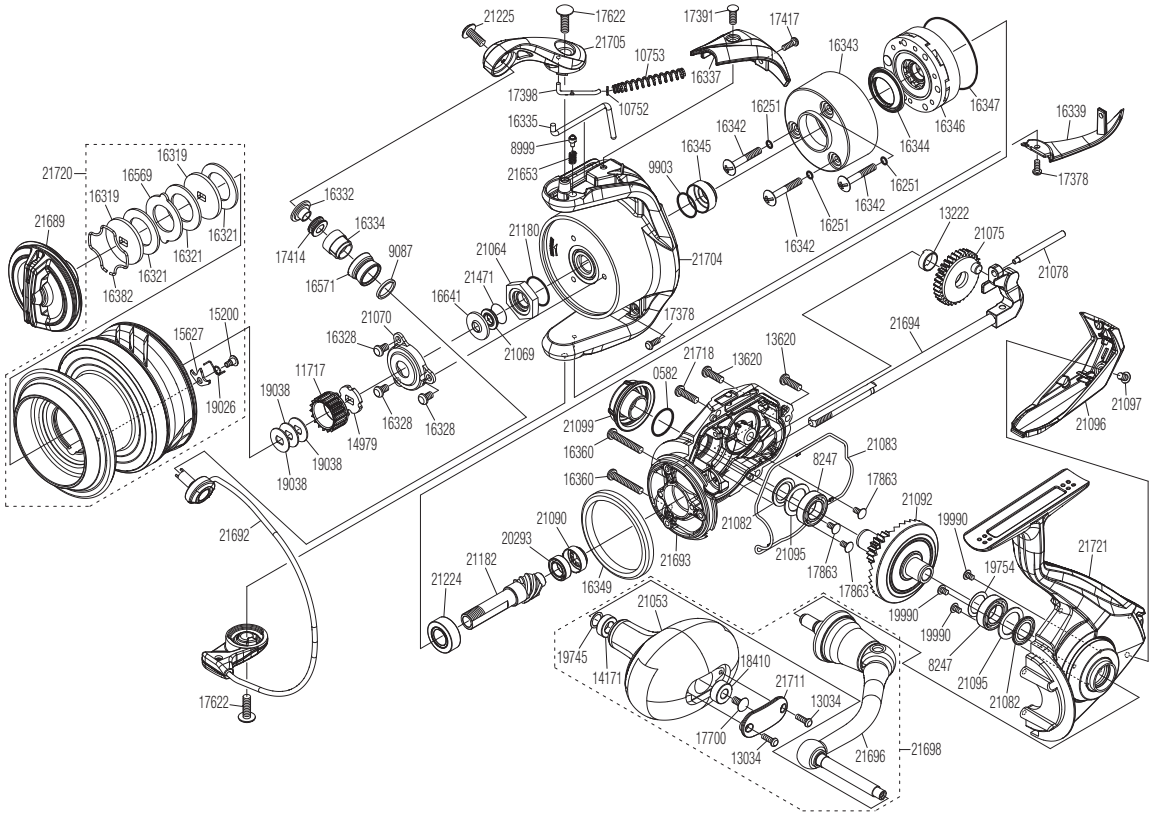


Please note that the number of adjusting washers may not always be the same as shown in the exploded views.

(51SF53M063X) Please note that your actions take full responsibility when you take it apart.

| # | Part No. | Description | # | Part No. | Description | # | Part No. | Description |
|---|---|---|---|---|---|---|---|---|
| 0582 | 108WH | O Ring | 16569 | 102ZB | Eared Washer | 21182 | 10TGR | Pinion Gear |
| 8247 | 104PR | Ball Bearing | 16571 | 10KY0 | Line Roller | 21224 | 10E7A | Ball Bearing |
| 8999 | 10HEA | Click Pin | 16641 | 107F7 | Bearing Water Proof | 21225 | 1008N | Screw |
| 9087 | 10KFE | Spacer | 17378 | 10L1R | Screw | 21471 | 100G6 | O Ring |
| 9903 | 108WA | O Ring | 17391 | 10LFK | Screw | 21653 | 10HEL | Click Spring |
| 10752 | 10TYE | Spring Guide A Support Collar | 17398 | 105LU | Bail Spring Guide A | 21689 | 10SKN | Drag Knob Assembly |
| 10753 | 10FVD | Bail Spring | 17414 | 10TN7 | Collar | 21692 | 10TKL | Bail Assembly |
| 11717 | 10Q03 | Spool Support A | 17417 | 10L1T | Screw | 21693 | 10TL7 | Body Assembly |
| 13034 | 103NJ | Screw | 17622 | 10LLK | Screw | 21694 | 10SYY | Main Shaft Assembly |
| 13222 | 10JYG | Bushing | 17700 | 10LFA | Screw | 21696 | 10TL5 | Handle Shank Assembly |
| 13620 | 10L6D | Screw | 17863 | 10LCS | Screw | 21698 | 10SWU | Handle Assembly |
| 14171 | 104UJ | Bushing | 18410 | 10EU0 | Bushing | 21704 | 10SK6 | Rotor |
| 14979 | 10J03 | Spool Support B | 19026 | 100QY | Drag Click Spring | 21705 | 10SWN | Bail Arm |
| 15200 | 10A6G | Screw | 19038 | 100SV | Spool Washer | 21711 | 10SVU | Handle Knob ID Plate |
| 15627 | 1038E | Drag Click | 19745 | 104FH | Washer | 21718 | 1011G | Screw |
| 16251 | 108WW | O Ring | 19754 | 10DKJ | Washer | 21720 | 10SWR | Spool Assembly |
| 16319 | 10BC8 | Key Washer | 19990 | 1055H | Screw | 21721 | 10TL8 | Side Cover Assembly |
| 16321 | 10347 | Drag Washer | 20293 | 10K5Y | Ball Bearing | | | |
| 16328 | 10LSM | Screw | 21053 | 10R8C | Handle Knob Assembly | | | |
| 16332 | 107X4 | Washer | 21064 | 100X4 | Rotor Nut | | | |
| 16334 | 107RN | Bushing | 21069 | 10TG8 | Spacer | | | |
| 16335 | 106KM | Bail Trip Lever | 21070 | 10TGE | Rotor Nut Lock Plate | | | |
| 16337 | 1087Y | Bail Spring Cover | 21075 | 10TG7 | Oscillating Gear | | | |
| 16339 | 10MNB | Bail Hold Support Guard | 21078 | 10TG9 | Oscillating Guide | | | |
| 16342 | 10A6S | Screw | 21082 | 10TGJ | Bearing Water Proof | | | |
| 16343 | 10MH9 | Clutch Water Proof Cover | 21083 | 10TGH | Body Seal | | | |
| 16344 | 10MH1 | Roller Clutch Water Proof | 21090 | 100XM | Bushing | | | |
| 16345 | 10K7R | Rotor Ring | 21092 | 100XS | Drive Gear Assembly | | | |
| 16346 | 10QPE | Roller Clutch Assembly | 21095 | 10BGF | Washer | | | |
| 16347 | 10H4F | O Ring | 21096 | 10244 | Rear Protector | | | |
| 16349 | 104G7 | Friction Ring | 21097 | 10LHR | Screw | | | |
| 16360 | 10LZ7 | Screw | 21099 | 101HW | Handle Screw Cap | | | |
| 16382 | 10B8P | Retainer | 21180 | 10EZB | O Ring | | | |