# SHIMANO

## TALICA

# TAC-8

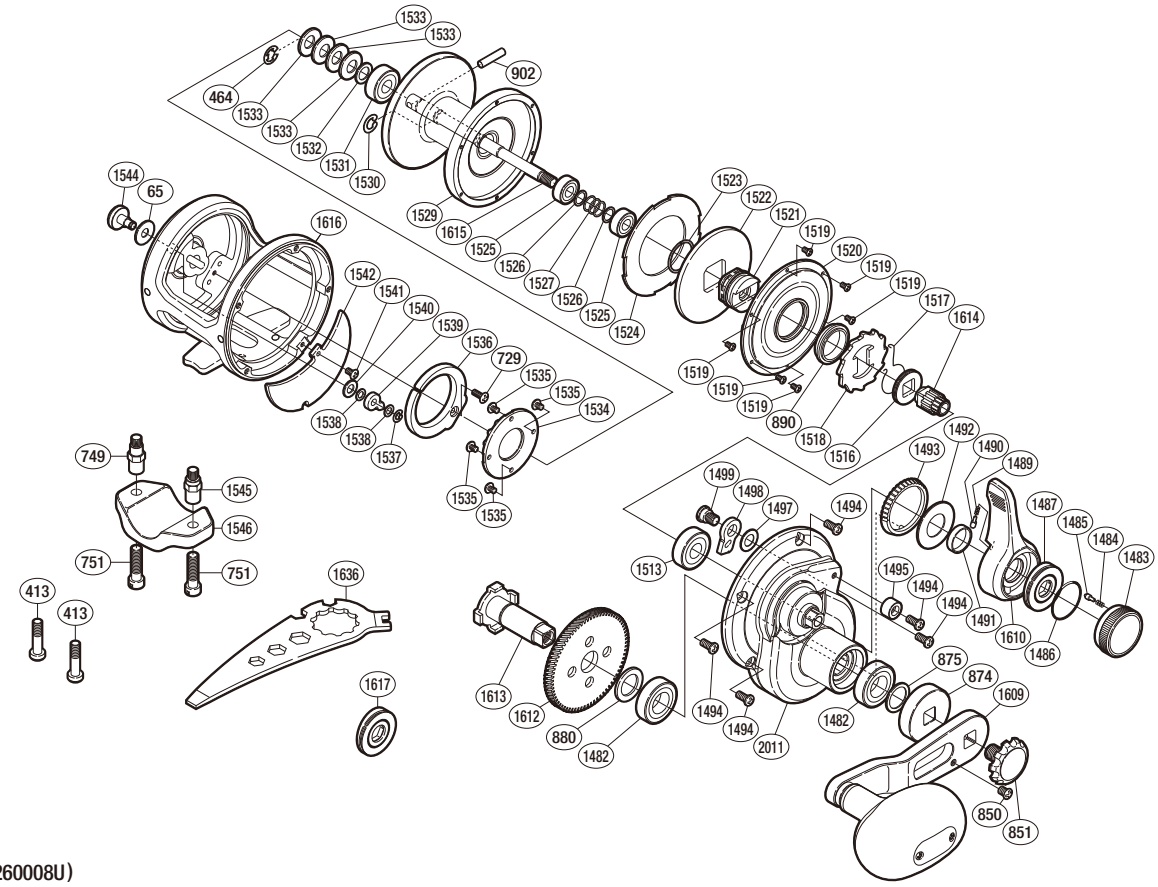


(51RJ260008U)

| # | Part No. | Description | # | Part No. | Description | # | Part No. | Description |
|---|---|---|---|---|---|---|---|---|
| 0065 | 104H2 | Spacer | 1498 | 10PKK | Anti-Reverse Pawl | 1538 | 10HV2 | Washer |
| 0464 | 105RY | E Lock | 1499 | 10PE4 | Anti-Reverse Pawl Pin | 1539 | 10GQV | Click Pawl |
| 0729 | 103E9 | Screw | 1513 | 104VJ | Ball Bearing | 1540 | 10G88 | Spacer |
| 0850 | 10MC5 | Screw | 1516 | 10CDJ | Anti-Reverse Pawl Spring Holder | 1541 | 10LVE | Screw |
| 0851 | 106XM | Handle Bolt | 1517 | 10CDH | Anti-Reverse Pawl Spring | 1542 | 105WP | Set Plate |
| 0874 | 107QY | Gear Shaft Shield | 1518 | 10DAK | Anti-Reverse Ratchet | 1544 | 104GW | Click Button |
| 0875 | 10J1C | Washer | 1519 | 10PRS | Screw | 1609 | 102VJ | Handle |
| 0880 | 10J1B | Washer | 1520 | 104R0 | Cooling Shield | 1610 | 108BA | Drag Control Lever |
| 0890 | 10EW9 | Waterproof Ring | 1521 | 10AC0 | Pinion Guard | 1612 | 10QKC | Drive Gear |
| 0902 | 10MCU | Cross Pin | 1522 | 10G4E | Drag Plate | 1613 | 10A2T | Drive Shaft |
| 1482 | 104PW | Ball Bearing | 1523 | 10EVW | Seal Lock | 1614 | 10A4F | Pinion Gear |
| 1483 | 108F8 | Pre-Program Dial | 1524 | 10G3T | Drag Washer | 1615 | 10EZZ | Spool Shaft |
| 1484 | 10K07 | Click Spring | 1525 | 105CA | Ball Bearing | 1616 | 10KBD | One-Piece Frame |
| 1485 | 10JX6 | Click Pin | 1526 | 10HV5 | Washer | 2011 | 109FY | Right Side Plate |
| 1486 | 108WE | O Ring | 1527 | 1060F | Pressure Release Spring | | | |
| 1487 | 10CC9 | Lever Shaft Body | 1529 | 10GYQ | Spool | 0413 | 10A7C | Rod Clamp Bolt (Accessory) |
| 1489 | 10C3X | Lever Click Shoe | 1530 | 13JYP | C Lock | 0749 | 10JC8 | Rod Clamp Nut (Accessory) |
| 1490 | 10C3V | Lever Click | 1531 | 108PJ | Ball Bearing | 0751 | 10JBV | Rod Clamp Bolt (Accessory) |
| 1491 | 108DQ | Lever Thrust Ring | 1532 | 10G8H | Washer | 1545 | 10JCC | Rod Clamp Nut (Accessory) |
| 1492 | 10G89 | Washer | 1533 | 10528 | Coned Disc Spring | 1546 | 10AS3 | Rod Clamp (Accessory) |
| 1493 | 10F6A | Lever Click Gear | 1534 | 104F3 | Click Gear | | | |
| 1494 | 10K05 | Screw | 1535 | 10MPC | Screw | 1636 | 10MJ7 | Wrench (Accessory) |
| 1495 | 10CAB | Bolt Shield | 1536 | 1046F | Click Spring | | | |
| 1497 | 10GA1 | Washer | 1537 | 105S1 | C Lock | 1617 | 10C62 | Lever Shaft Body (Sfs) (Accessory) |

Please note that the number of adjusting washers may not be the same as shown in the exploded views.
(Adjustment will vary with each individual product.)