KidKraft
MADE FOR MAKE BELIEVE™

F29015E

NEWPORT PLAYSET

MISSING SOMETHING? CALL US OR GO ONLINE

OBSTACLE FREE SAFETY ZONE - 26' 2" (7.93m) x 23' 2" (7.06m) area requires Protective Surfacing. See page 4.

MAXIMUM VERTICAL FALL HEIGHT - 6' (1.8 m).

CAPACITY - 9 Users Maximum, Ages 3 to 10; Weight Limit 110 lbs. (50 kg) per child.

RESIDENTAL HOME USE ONLY. Not intended for public areas such as multi-unit residences, schools, churches, nurseries, day cares or parks.

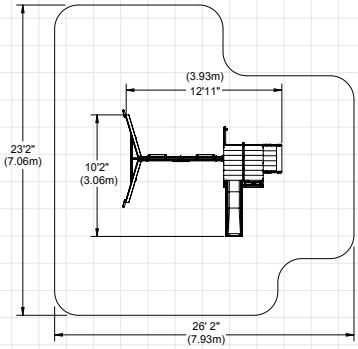

INSTALLATION AND OPERATING INSTRUCTIONS

FOR 24/7 ONLINE PARTS REPLACEMENT

parts.kidkraft.com

KidKraft, Inc.
4630 Olin Road
Dallas, Texas 75244
USA

customerservice@kidkraft.com

1.800.933.0771
972.385.0100

parts.kidkraft.eu

KidKraft Netherlands BV
Olympisch Stadion 8
1076 DE Amsterdam
The Netherlands

europecustomerservice@kidkraft.com

+31 20 305 8620
M-F from 09:00 to 17:30 (GMT+1)

9409015E Rev 03/17/2023

TWO-PERSON ASSEMBLY

ASSEMBLY TIME 4 - 8 HOURS

WARNING. ONLY FOR OUTDOOR DOMESTIC USE

⚠ WARNING

To reduce the risk of serious injury or death, please read and follow these instructions. Keep and refer to instructions as needed and pass along to any future owners of this item.

Congratulations on purchasing a KidKraft product!

Our items are made of high-quality, durable Cunninghamia Lanceolata wood from the cypress family.

Lumber from these trees are known for their light weight and excellent strength. The porosity of this wood allows the moisture to absorb and evaporate in the fibers, resisting rot and bugs.

Engineered for great play, our products also go through extensive testing for safety.

Plus, our team has developed a series of proprietary methods for a simpler, more organized assembly. Less build time and more play time is our motto!

However, during assembly if you have any questions or concerns, please reach out. Our Customer Service can help with missing parts, instructions or maintenance.

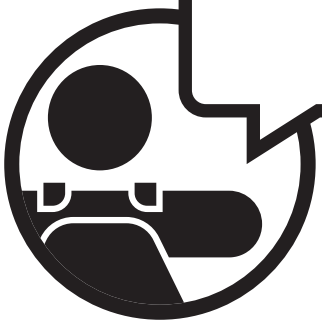

Warnings and Safe Play Instructions

CONTINUOUS ADULT SUPERVISION REQUIRED. Most serious injuries and deaths on playground equipment have occurred while children were unsupervised! Our products are designed to meet mandatory and voluntary safety standards. Complying with all warnings and recommendations in these instructions will reduce the risk of serious or fatal injury to children using this play system. Go over the warnings and safe play instructions regularly with your children and make certain that they understand and follow them. Remember on-site adult supervision is required for children of all ages.

WARNING

SERIOUS HEAD INJURY HAZARD
Installation over concrete, asphalt, dirt, grass, carpet and other hard surface creates a risk of serious injury or death from falls to the ground. Install and maintain shock absorbing material under and around play-set as recommended on page 3 of these instructions.

COLLISION HAZARD
Place play-set on level ground at least 2m from any obstruction such as a garage or house, fences, poles, trees, sidewalks, walls, landscape timbers, rocks, pavement, planters, garden borders, overhanging branches, laundry lines, and electrical wires. (See OBSTACLE FREE SAFETY ZONE on cover)

CHOKING HAZARD/SHARP EDGES & POINTS
Adult assembly required. This product contains small parts and parts with sharp edges and points. Keep parts away from children until fully assembled.

WARNING LABEL
Owners shall be responsible for maintaining the legibility of the warning labels.

STRANGULATION HAZARD
- NEVER allow children to play with ropes, clotheslines, pet leashes, cables, chains or cord-like items when using this play-set or to attach these items to play-set.
- NEVER allow children to wear loose fitting clothing, ponchos, hoods, scarves, capes, necklaces, items with draw-strings, cords or ties when using this play-set.
- NEVER allow children to wear bike or sport helmets when using this play-set.

Failure to prohibit these items, even helmets with chin straps, increases the risk of serious injury and death to children from entanglement and strangulation.

TIP OVER HAZARD
Choose a level location for the equipment. This can reduce the likelihood of the play set tipping over and loose-fill surfacing materials washing away during heavy rains.

DO NOT allow children to play on the play-set until the assembly is complete and the unit is properly anchored.

Never add extra length to chain or rope. The chains or ropes provided are the maximum length designed for the swinging element(s).

WARNING – Safe Play Instructions

- ✓ Observe capacity limitations of your play-set. See front cover.
- ✓ Dress children with well fitting and full foot enclosing footwear.
- ✓ Teach children to sit with their full weight in the center of the swing seat to prevent erratic swing motion or falling off.
- ✓ Check for splintered, broken or cracked wood; missing, loose, or sharp edged hardware. Replace, tighten and or sand smooth as required prior to playing.
- ✓ Verify that suspended climbing ropes, rope ladders, chain or cable are secured at both ends and cannot be looped back on itself as to create an entanglement hazard.
- ✓ On sunny and or hot days, check the slide and other plastic rides to assure that they are not very hot as to cause burns. Cool hot slide and rides with water and wipe dry prior to using.
- ✓ Orientate slide such that it gets the least amount of exposure to the sun.

- ✘ Do not allow children to wear open toe or heel footwear like sandals, flip–flops or clogs.
- ✘ Do not allow children to walk, in front, between, behind or close to moving rides.
- ✘ Do not let children twist swing chains or ropes or loop them over the top support bar. This may reduce the strength of the chain or rope and cause premature failure.
- ✘ Do not let children get off rides while they are in motion.
- ✘ Do not permit climbing on equipment when it is wet.
- ✘ Do not permit rough play or use of equipment in a manner for which it was not intended. Standing on or jumping from the roof, elevated platforms, swings, climbers, ladders or slide can be dangerous.
- ✘ Do not allow children to swing empty rides or seats.
- ✘ Do not allow children to go down slide head first or run up slide.

⚠Protective Surfacing - Reducing Risk of Serious Head Injury From Falls.

One of the most important things you can do to reduce the likelihood of serious head injuries is to install shock-absorbing protective surfacing under and around your play equipment. The protective surfacing should be applied to a depth that is suitable for the equipment height in accordance with ASTM F1292. There are different types of surfacing to choose from; whichever product you select, follow these guidelines:

Loose-Fill Materials

- Maintain a minimum depth of 9 inches of loose-fill materials such as wood mulch/chips, engineered wood fiber (EWF), or shredded/recycled rubber mulch for equipment up to 8 feet high; and 9 inches of sand or pea gravel for equipment up to 5 feet high. NOTE: An initial fill level of 12 inches will compress to about a 9-inch depth of surfacing over time. The surfacing will also compact, displace, and settle, and should be periodically raked and refilled to maintain at least a 9-inch depth.
- Use a minimum of 6 inches of protective surfacing for play equipment less than 4 feet in height. If maintained properly, this should be adequate. (At depths less than 6 inches, the protective material is too easily displaced or compacted.)

NOTE: Do not install home playground equipment over concrete, asphalt, or any other hard surface. A fall onto a hard surface can result in serious injury to the equipment user. Grass and dirt are not considered protective surfacing because wear and environmental factors can reduce their shock absorbing effectiveness. Carpeting and thin mats are not adequate protective surfacing. Ground level equipment -- such as a sandbox, activity wall, playhouse or other equipment that has no elevated play surface -- does not need any protective surfacing.

- Use containment, such as digging out around the perimeter and/or lining the perimeter with landscape edging. Don't forget to account for water drainage.
- Periodically rake, check and maintain the depth of the loose-fill surfacing material. Marking the correct depth on the play equipment support posts will help you to see when the material has settled and needs to be raked and or replenished. Be sure to rake and evenly redistribute the surfacing in heavily used areas.
- Do not install loose fill surfacing over hard surfaces such as concrete or asphalt.

Poured-In-Place Surfaces or Pre-Manufactured Rubber Tiles

You may be interested in using surfacing other than loose-fill materials - like rubber tiles or poured-in-place surfaces.

- Installations of these surfaces generally require a professional and are not "do-it yourself" projects.
- Review surface specifications before purchasing this type of surfacing. Ask the installer/manufacturer for a report showing that the product has been tested to the following safety standard: ASTM F1292 *Standard Specification for Impact Attenuation of Surfacing Materials within the Use Zone of Playground Equipment*. This report should show the specific height for which the surface is intended to protect against serious head injury. This height should be equal to or greater than the fall height - vertical distance between a designated play surface (*elevated surface for standing, sitting, or climbing*) and the protective surfacing below - of your play equipment.
- Check the protective surfacing frequently for wear.

Placement

Proper placement and maintenance of protective surfacing is essential. Refer to diagram on front cover. Be sure to;

- Extend surfacing at least 2m from the equipment in all directions.
- For to-fro swings, extend protective surfacing in front of and behind the swing to a distance equal to twice the height of the top bar from which the swing is suspended.
- For tire swings, extend surfacing in a circle whose radius is equal to the height of the suspending chain or rope, plus 6 feet in all directions.

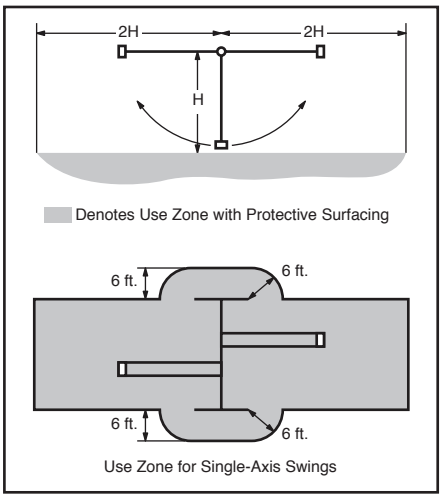

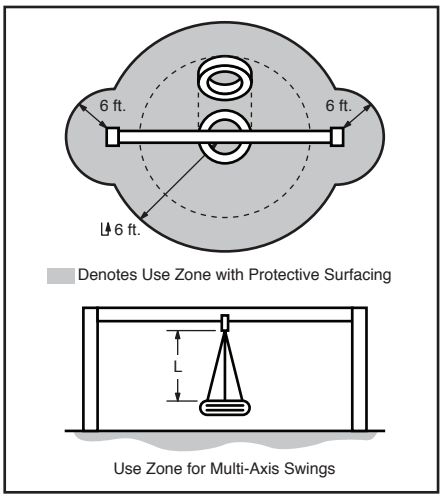

From the CPSC Outdoor Home Playground Safety Handbook. At http://www.playgroundregs.com/resources/CPSC%20324.pdf

Instructions for Proper Maintenance

Your KidKraft Play System is designed and constructed of quality materials with your child's safety in mind. As with all outdoor products used by children, it will weather and wear. To maximize the enjoyment, safety and life of your Play Set, it is important that you, the owner, properly maintain it.

Check the following at the beginning of the play season:

HARDWARE:

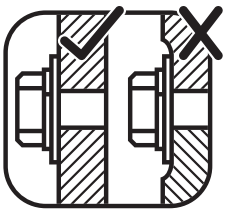

- ✓ Check metal parts for rust. If found, sand and repaint using a non-lead paint complying with 16 CFR 1303.
- ✓ Inspect and tighten all hardware. On wood assemblies DO NOT OVER-TIGHTEN as to cause crushing and splintering of wood.
- ✓ Check for sharp edges or protruding screw threads, add washers if required.

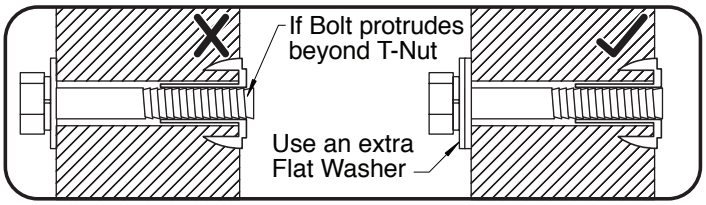

SHOCK ABSORBING SURFACING:

- ✓ Check for foreign objects. Rake and check depth of loose fill protective surfacing materials to prevent compaction and maintain appropriate depth. Replace as necessary. (See Protective Surfacing, page 3)

GROUND STAKES (ANCHORS):

- ✓ Check for looseness, damage or deterioration. Should firmly anchor unit to ground during use. Re-secure and or replace, if necessary.

SWING HANGERS:

- ✓ Check that bolts are secure and tight. Quick clips should be completely closed and threaded clips screwed tight.
- ✓ If squeaking occurs lubricate bushings with oil or WD-40®.

SWINGS, ROPES AND RIDES:

- ✓ Reinstall if removed during cold season. Check all moving parts including swing seats, ropes, chains and attachments for wear, rust and other deterioration. Replace as needed.
- ✓ Check that ropes are tight, secure at both ends and cannot loop back as to create an entrapment.

WOOD PARTS:

- ✓ Check all wood members for deterioration, structural damage and splintering. Sand down splinters and replace deteriorated wood members. As with all wood, some checking and small cracks in grain is normal.
- ✓ Unprotected, they will appear weathered over time. Periodic application of an exterior water repellent or stain (water-based) will help improve appearance and life.

Check twice a month during play season:

HARDWARE:

- ✓ Inspect for tightness. Must be firmly against, but not crushing the wood. DO NOT OVER-TIGHTEN. This will cause splintering of wood.
- ✓ Check for sharp edges or protruding screw threads. Add washers if required.

SHOCK ABSORBING SURFACING:

- ✓ Rake and check depth of loose fill protective surfacing materials to prevent compaction and maintain appropriate depth. Replace as necessary. (See Protective Surfacing, page 3)

Check once a month during play season:

SWING HANGERS:

- ✓ Check that they are secure and orientated correctly. Hook should rotate freely and perpendicular to support beam.
- ✓ If squeaking occurs lubricate bushings with oil or WD-40®.

SWINGS AND RIDES:

- ✓ Check swing seats, all ropes, chains and attachments for fraying, wear, excessive corrosion or damage. Replace if structurally damaged or deteriorated.

Check at the end of the play season:

SWINGS AND RIDES:

- ✓ To prolong their life, remove swings and store inside when outside temperature is below 32°F/0°C. Below freezing, plastic parts may become more brittle.

SHOCK ABSORBING SURFACING:

- ✓ Rake and check depth of loose fill protective surfacing materials to prevent compaction and maintain appropriate depth. Replace as necessary. (See Protective Surfacing, page 3)

If you dispose of your play set: Please disassemble and dispose of your unit so that it does not create any unreasonable hazards at the time it is discarded. Be sure to follow your local waste ordinances.

About Our Wood

KidKraft Premium Play Systems uses only premium playset lumber, ensuring the safest product for your children's use. Although we take great care in selecting the best quality lumber available, wood is still a product of nature and susceptible to weathering which can change the appearance of your set.

What causes weathering? Does it affect the strength of my Play System?

One of the main reasons for weathering is the effects of water (moisture); the moisture content of the wood at the surface is different than the interior of the wood. As the climate changes, moisture moves in or out of the wood, causing tension which can result in checking and or warping. You can expect the following due to weathering. These changes will not affect the strength of the product:

1. **Checking** is surface cracks in the wood along the grain. A post 4" x 4" (101mm x 101mm) will experience more checking than a board 1" x 4" (25mm x 101mm) because the surface and interior moisture content will vary more widely than in

thinner wood.

2. **Warping** results from any distortion (twisting, cupping) from the original plane of the board and often happens from rapid wetting and drying of the wood.

3. **Fading** happens as a natural change in the wood color as it is exposed to sun-light and will turn a grey over time.

How can I reduce the amount of weathering to my Play System?

At the factory we have coated the wood with a water repellent or stain. This coating decreases the amount of water absorption during rain or snow thus decreasing the tension in the wood. Sunlight will break down the coating, so we recommend applying a water repellent or stain on a yearly basis (see your local stain and paint supplier for a recommended product).

Most weathering is just the normal result of nature and will not affect safe play and enjoyment for your child. However if you are concerned that a part has experienced a severe weathering problem please call our consumer relations department for further assistance.

Complete and mail registration card to receive important product notifications and assure prompt warranty service.

KidKraft Limited Warranty

MISSING OR DAMAGED PARTS:
KidKraft will replace any parts within 90 days from date of purchase found to be missing from or damaged in the original packaging. See Fig.1

Fig. 1	Product Age (All Parts)	Consumer Pays
	0-90 Days from date of purchase	$0 for Part + Free Shipping

DEFECTS IN MATERIAL AND WORKMANSHIP:
KidKraft warrants that this product is free from defects in materials and workmanship for a period of one (1) year from the original date of purchase (dated sales receipt and/or product registration is required). This one (1) year warranty covers all parts including wood, hardware, and all accessories (Such as swings, rides, and slides). See Fig. 2

Fig. 2	Product Age (All Parts)	Consumer Pays
	91 Days to 1 Year	$0 for Part + Free Shipping

WOOD ROT, DECAY, AND INSECT DAMAGE:
All wood carries a five (5) year warranty against rot, decay, and insect damage (dated sales receipt and/or product registration is required). Refer to the schedule below for charges associated with replacement of wood parts under this **Limited Warranty.** See Fig. 3

Fig. 3	Product Age (Wood Parts)	Consumer Pays
	0 Days to 1 Year	$0 for Part + Free Shipping
	After 1 Year to 5 Year	$0 for Part + Shipping & Handling
	Over 5 Years	100% for Part (if available) + Shipping & Handling

This warranty applies to the original owner and registrant and is non-transferable. Regular maintenance is required to ensure the integrity of this product. Failure by the owner to maintain the product according to the maintenance requirements may void this warranty.

This Limited Warranty does NOT cover:

- Any inspection cost
- Labor and/or costs for replacement of any defective item(s), including but not limited to, professional installer costs
- Incidental or consequential damages, including but not limited to, as a result of set relocation, move and/or reinstall
- Cosmetic defects which do not affect performance or integrity of a part or the entire product
- Vandalism, improper use or installation, or acts of nature, including but not limited to, high winds, fire, and flood
- Minor twisting, warping, checking, or any natural occurring properties of wood that do not affect performance or integrity.
- Any KidKraft product purchased, including but not limited to, a non-approved retailer, auction houses, second-hand, and as-is clearance items.

KidKraft products have been designed for safety and quality. Modifications made to the original product may damage the structural integrity of the unit leading to failure and possible injury. KidKraft cannot assume any responsibility for the modified products. Furthermore, modifications void all warranties.

This product is warranted for **RESIDENTIAL USE ONLY.** Under no circumstance should a KidKraft product be used in public settings such as schools, churches, playgrounds, parks, home and professional day cares and the like. Such use may lead to product failure and potential injury. Public use will void this warranty. KidKraft disclaims all other representations and warranties of any kind, express or implied.

Keys to Assembly Success

Tools Required

• Tape Measure • Carpenters Level • Carpenters Square • Claw Hammer • Standard or Cordless Drill	• #1, #2 & #3 Phillips or Robertson Bits or Screwdriver • Ratchet with extension (1/2” & 9/16” sockets)	• Open End Wrench (7/16”, 1/2” & 9/16”) • Adjustable Wrench • 1/8” & 3/16” Drill Bits • Pencil	• 3/16” Hex Key • 8’ Step Ladder • Safety Glasses • Adult Helpers

Part Identification Key

On each page, you will find the parts and quantities required to complete the assembly step illustrated on that page. Here is a sample.

2X 012 Post 2 x 4 x 83”

Quantity — Key Number — Part Description, Part Size

Symbols

Throughout these instructions symbols are provided as important reminders for proper and safe assembly.

This identifies information that requires special attention. Improper assembly could lead to an unsafe or dangerous condition.

Use Help — Use Help

Where this is shown, 2 or 3 people are required to safely complete the step. To avoid injury or damage to the assembly make sure to get help!

Measure Distance

Use a measuring tape to assure proper location.

Square Assembly

Check that assembly is square before tightening bolts.

Check that set or assembly is properly level before proceeding.

Use Level

Pre-drill 1/8” & 3/16” Bit

Pre-drill a pilot hole before fastening screw or lag to prevent splitting of wood.

Tighten Bolts

This indicates time to tighten bolts, but not too tight! Do not crush the wood. This may create splinters and cause structural damage.

CAUTION – Protrusion Hazard

Once the assembly is tightened, watch for exposed threads. If a thread protrudes from the T-Nut, remove the bolt and add washers to eliminate this condition. Extra washers have been provided for this purpose.

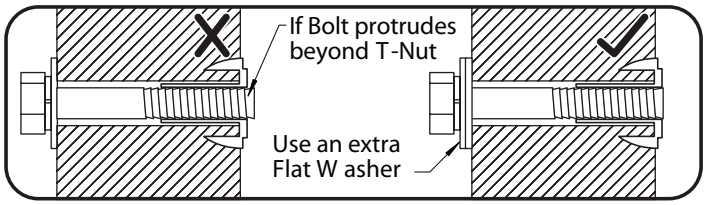

Proper Hardware Assembly

Lag screws require drilling pilot holes to avoid splitting wood. Only a flat washer is required. For ease of installation liquid soap can be used on all lag-type screws.

For bolts, tap T-Nut into hole with hammer. Insert the hex bolt through lock washer first then flat washer then hole. Because the assemblies need to be squared do not completely tighten until instructed. Pay close attention to diameter of the bolts. 5/16” is slightly larger than 1/4”.

Note: Wafer head bolts with blue lock tight or a bolt with a Ny-Lok nut do NOT require a lock washer.

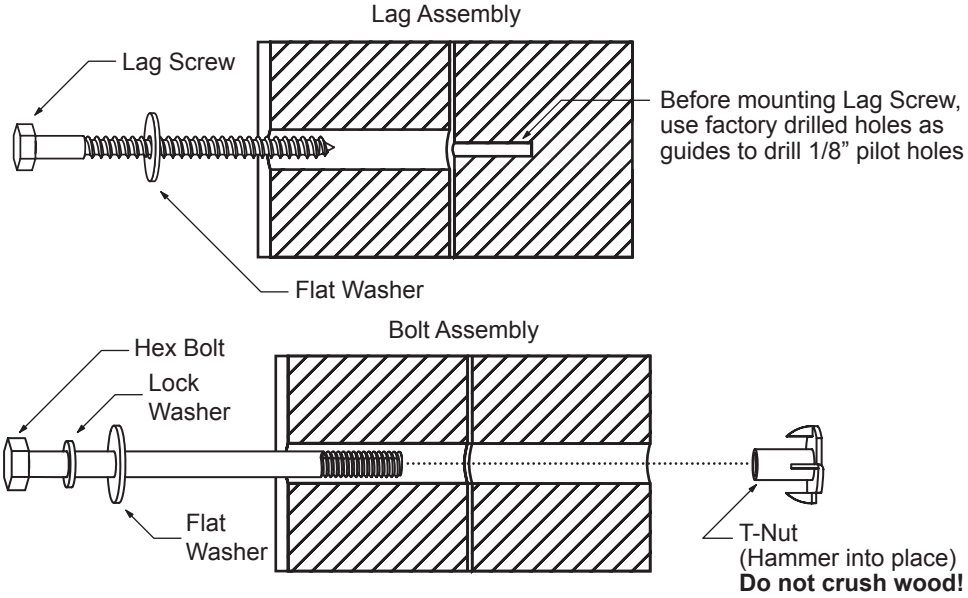

Part Identification (Reduced Part Size)

1pc. - 1923 Side Top FSC (5/8 x 3-3/8 x 26-7/8") - Box 1 - 3131923

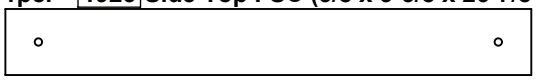

1pc. - 1922 Seat Rail FSC (5/8 x 3-3/8 x 27") - Box 1 - 3131922

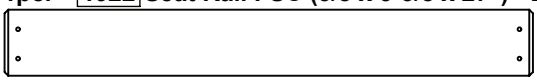

2pc. - 0304 CE Floor Board FSC (5/8 x 3-3/8 x 32-1/2") - Box 1 - 3130304

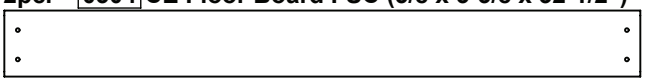

1pc. - 1925 Sw Top FSC (5/8 x 3-3/8 x 36") - Box 1 - 3131925

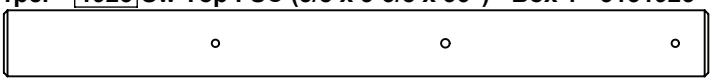

1pc. - 1981 Top Side FSC (5/8 x 3-3/8 x 36") - Box 1 - 3131981

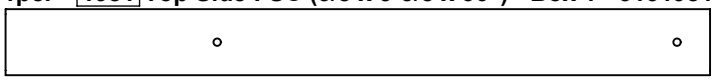

3pc. - 1982 Wall Board FSC (5/8 x 3 x 19") - Box 1 - 3131982

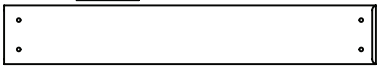

1pc. - 1920 Seat Bottom FSC (5/8 x 4-1/2 x 17-3/4") - Box 1 - 3131920

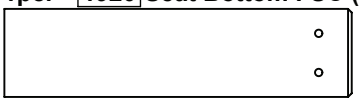

2pc. - 1911 Table Top FSC (5/8 x 4-1/2 x 28-7/8") - Box 1 - 3561911

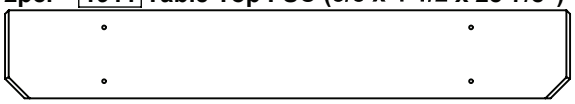

1pc. - 1914 Cafe Ground FSC (5/8 x 4-1/2 x 41-1/2") - Box 1 - 3131914

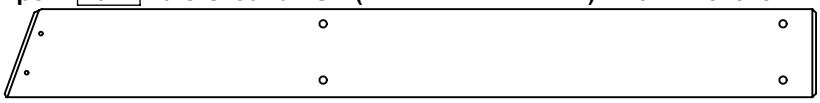

1pc. - 1917 Lower Back FSC (5/8 x 4-1/2 x 56-7/8") - Box 1 - 3131917

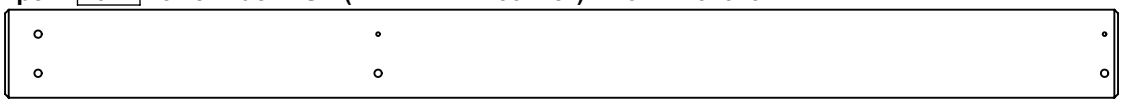

1pc. - 1928 Lower Side FSC (5/8 x 4-1/2 x 59-11/16") - Box 1 - 3131928

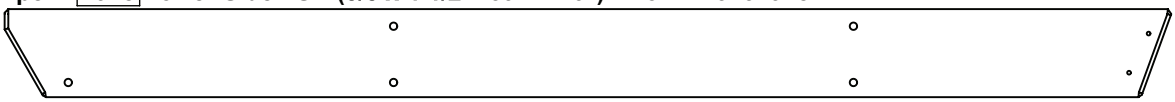

3pc. - 1777 CE Rock Board B FSC (5/8 x 5-3/8 x 17") - Box 1 - 3561777

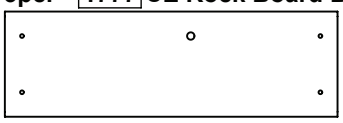

2pc. - 1778 CE Rock Board A FSC (5/8 x 5-3/8 x 17") - Box 1 - 3561778

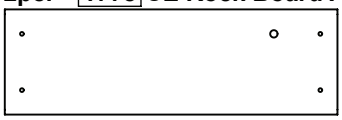

1pc. - 1779 CE Access Board FSC (5/8 x 5-3/8 x 17") - Box 1 - 3561779

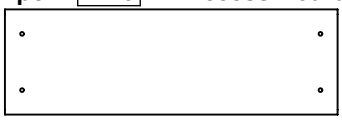

2pc. - 1980 Top Front Back FSC (5/8 x 3-3/8 x 38-1/2") - Box 1 - 3131980

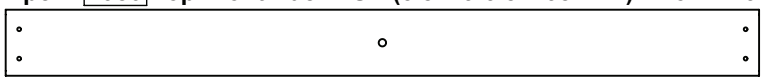

Part Identification (Reduced Part Size)

5pc. - 1776 Floor Board FSC (5/8 x 5-3/8 x 23-1/2") - Box 1 - 3131776

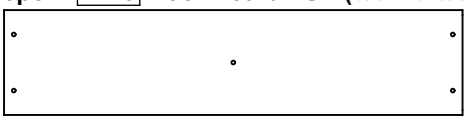

2pc. - 1774 CE Gap Board FSC (5/8 x 5-3/8 x 23-1/2") - Box 1 - 3131774

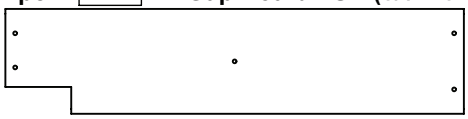

1pc. - 1924 SW Floor FSC (5/8 x 5-3/8 x 26-7/8") - Box 1 - 3131924

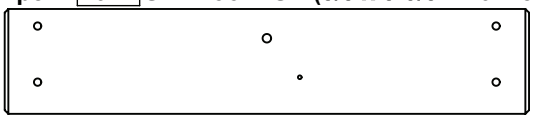

1pc. - 1760 Floor FSC (5/8 x 5-3/8 x 26-7/8") - Box 1 - 3131760

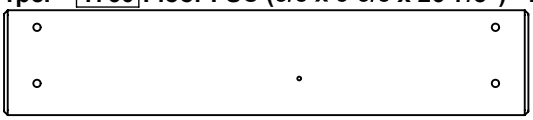

1pc. - 1910 Seat FSC (5/8 x 5-3/8 x 28-7/8") - Box 1 - 3561910

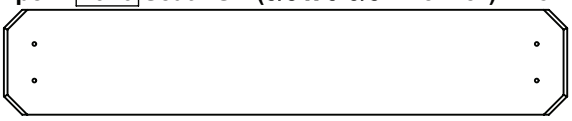

1pc. - 1913 Back Floor FSC (5/8 x 5-3/8 x 38-3/4") - Box 1 - 3131913

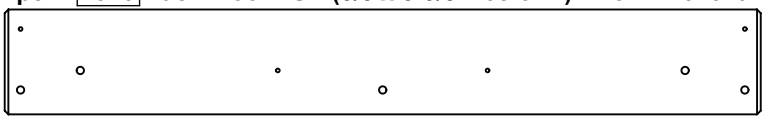

1pc. - 1767 Lower Front FSC (5/8 x 5-3/8 x 39-3/4") - Box 1 - 3131767

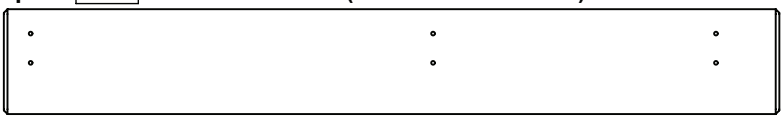

5pc. - 0318 Ground Stake FSC (1-1/4 x 1-1/2 x 14") - Box 1 - 3650318

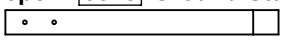

1pc. - 1763 Floor Joist FSC (5/4 x 2 x 38-1/2") - Box 1 - 3131763

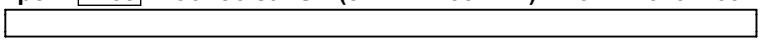

1pc. - 1862 SW Support FSC (1 x 3-1/4 x 46-12") - Box 1 - 3131862

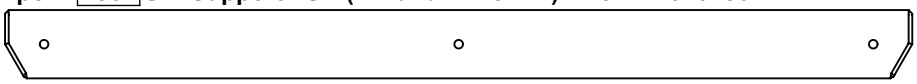

1pc. - 1761 Side Joist FSC (1-1/2 x 1-1/2 x 34-3/4") - Box 1 - 3131761

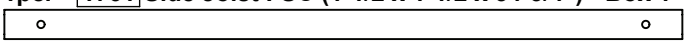

1pc. - 1919 Roof Ridge FSC (1-1/2 x 1-1/2 x 37-7/8") - Box 1 - 3131919

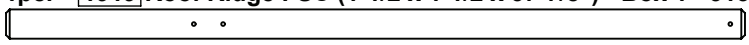

1pc. - 1912 Back Divider FSC (1-1/2 x 1-1/2 x 59-3/8") - Box 1 - 3131912

2pc. - 1766 Corner Block FSC (1-3/8 x 2-1/2 x 4-1/2") - Box 1 - 3131766

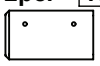

1pc. - 1990 Chalk Wall Brace FSC (5/8 x 1-3/8 x 38-1/2") - Box 1 - 3131990

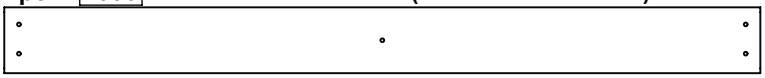

Part Identification (Reduced Part Size)

1pc. - 0312 Gusset FSC (1-3/8 x 2-1/2 x 16") - Box 1 - 3130312

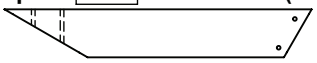

1pc. - 0369 Lower Diagonal FSC (1-3/8 x 2-1/2 x 37") - Box 1 - 3130369

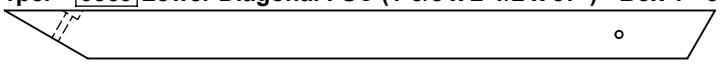

1pc. - 1764 Floor Front FSC (1-3/8 x 2-1/2 x 38-1/2") - Box 1 - 3131764

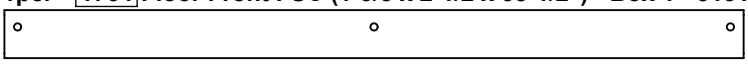

2pc. - 0349 Rock Rail FSC (1-3/8 x 2-1/2 x 51") - Box 1 - 3560349

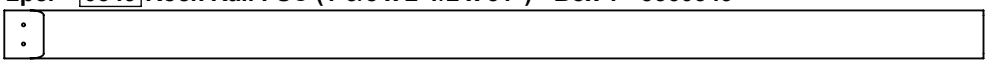

1pc. - 4919 SW Rail Block FSC (1-3/8 x 3-3/8 x 5-3/8") - Box 1 - 3134919

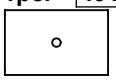

2pc. - 1921 Seat Post FSC (1-3/8 x 3-3/8 x 11") - Box 1 - 3131921

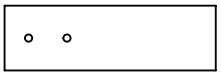

3pc. - 10860 Filling (1" x 2" x 3 1/4") - 31310860

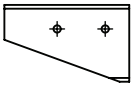

1pc. - 1861 Sw Mount FSC (1-3/8 x 3-3/8 x 38-1/8") - Box 1 - 3131861

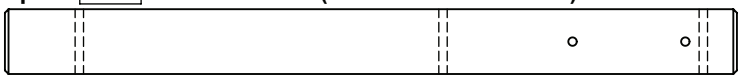

1pc. - 1856 SW Upright FSC (1-3/8 x 3-3/8 x 48-5/16") - Box 1 - 3131856

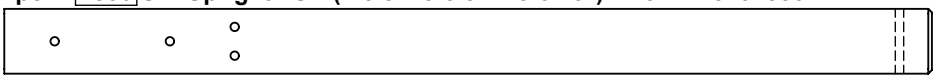

1pc. - 1916 Front Divider FSC (1-3/8 x 3-3/8 x 59-1/4") - Box 1 - 3131916

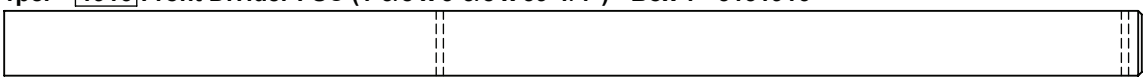

4pc. - 1500 Post FSC (1-3/8 x 3-3/8 x 83") - Box 1 - 3131500

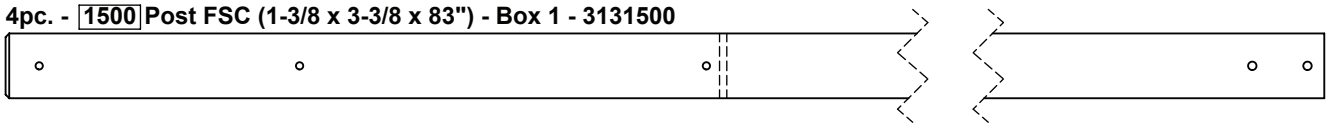

2pc. - 1863 SW Post FSC (1-3/8 x 3-3/8 x 86-11/16") - Box 1 - 3131863

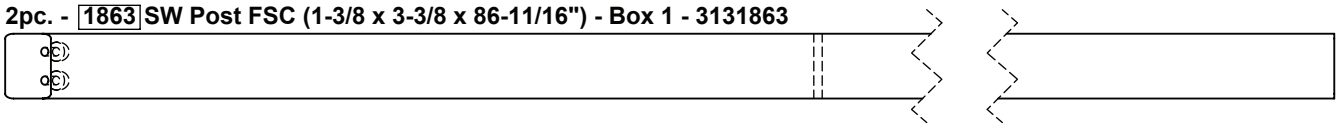

2pc. - 1926 Table Support FSC (1-1/2 x 5-3/8 x 12-5/16") - Box 1 - 3131926

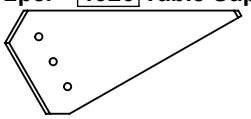

1pc. - 1249 Back Beam FSC (1-1/2 x 5-3/8 x 94") - Box 1 - 3131249

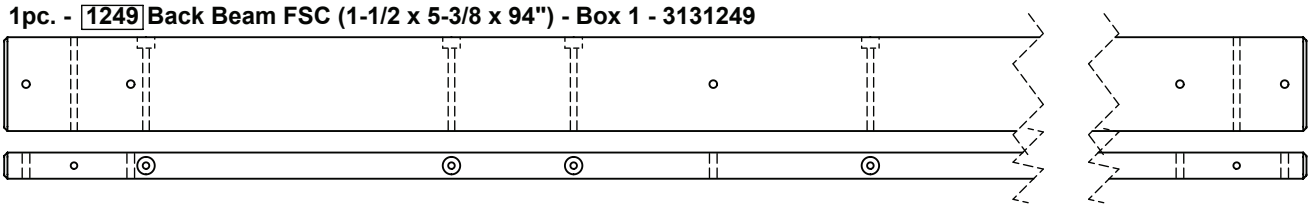

1pc. - 1248 Front Beam FSC (1-1/2 x 5-3/8 x 94") - Box 1 - 3131248

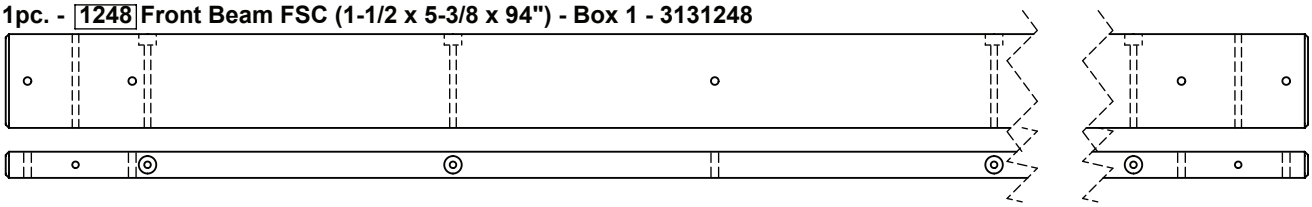

Hardware Identification (Actual Size)

8pc. **LS1** - Lag Screw 1/4 x 1-1/2" - (9262212)

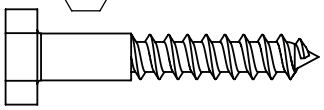

9pc. **LS3** - Lag Screw 1/4 x 3" - (9262230)

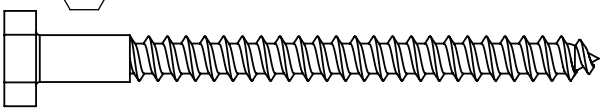

27pc. **H2** - Hex Bolt 1/4 x 2" - (9277220)

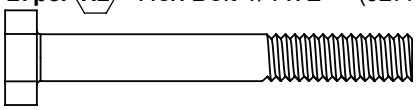

3pc. **H4** - Hex Bolt 1/4 x 4" - (9277240)

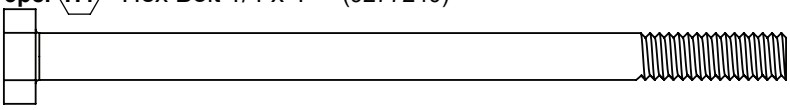

1pc. **H8** - Hex Bolt 1/4 x 4-1/4" - (9277241)

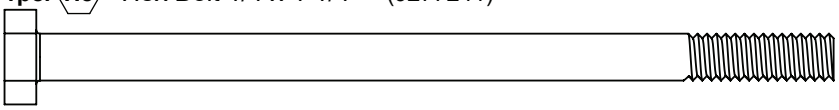

3pc. **H6** - Hex Bolt 1/4 x 4-3/4" - (9277243)

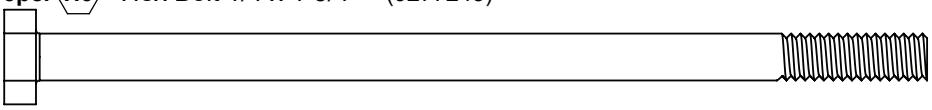

4pc. **H7** - Hex Bolt 1/4 x 5-1/2" - (9277252)

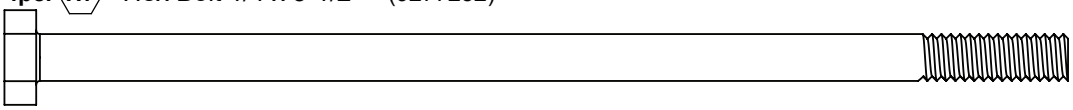

4pc. **G1** - Hex Bolt 5/16 x 1-1/2" - (9277312)

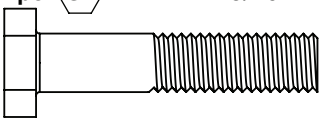

2pc. **G8** - Hex Bolt 5/16 x 2" - (9277320)

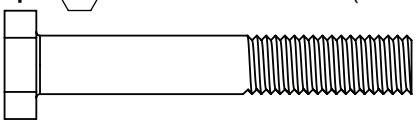

4pc. **G4** - Hex Bolt 5/16 x 4" - (9277340)

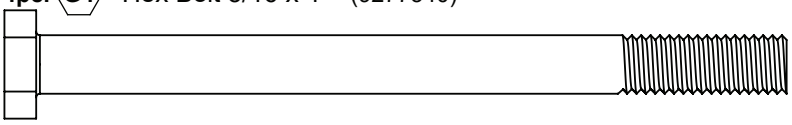

5pc. **G5** - Hex Bolt 5/16 x 4-1/2" - (9277342)

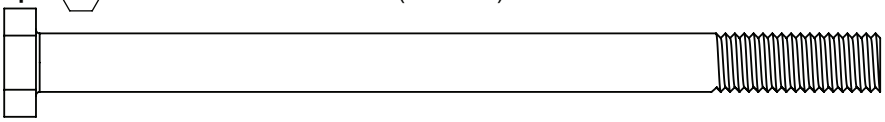

Hardware Identification (Actual Size)

13pc. **LW2** - 5/16" Lock Washer - (9253300)

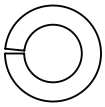

43pc. **LW1** - 1/4" Lock Washer - (9253200)

2pc. **LN2** - 5/16" Lock Nut - (9283300)

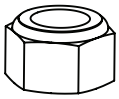

2pc. **LN4** - #12 Lock Nut - (9289600)

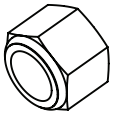

48pc. **FW3** - #8 Flat Washer - (9251500)

24pc. **FW0** - 3/16" Flat Washer - (9251100)

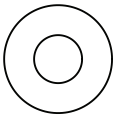

17pc. **FW2** - 5/16" Flat Washer - (9251300)

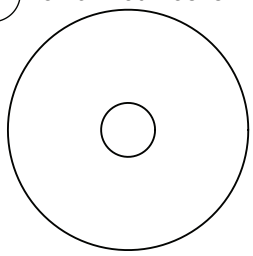

55pc. **FW1** - 1/4" Flat Washer - (9251200)

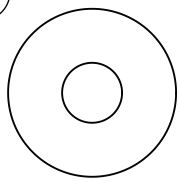

38pc. **TN1** - 1/4" T - Nut -(9285200)

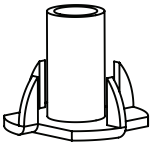

13pc. **TN2** - 5/16" T- Nut - (9285300)

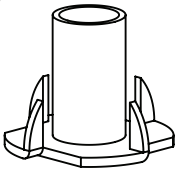

5pc. **BN1** - 1/4" Barrel Nut - (9248200)

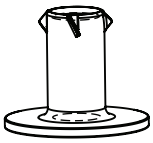

2pc. **MB1** -Pan Bolt #12 x 1/2" - (53433602)

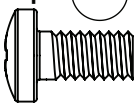

5pc. **PB2** - Pan Bolt 1/4 x 1-1/4" - (9274211)

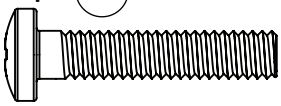

58pc. **S5** - Pan Screw #8 x 1/2" - (9264504)

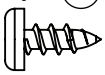

7pc. **S10** - Pan Screw #8 x 1" - (9264510)

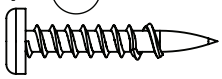

22pc. **S7** - Pan Screw #12 x 2" - (9264620)

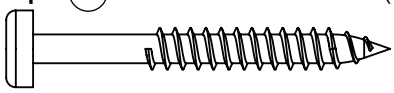

22pc. **S1** - Wood Screw #8 x 1-1/8" - (9290514)

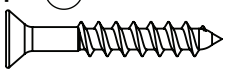

83pc. **S2** - Wood Screw #8 x 1-1/2" - (9260512)

10pc. **S15** - Wood Screw #8 x 1-3/4" - (9260513)

11pc. **S3** - Wood Screw #8 x 2-1/2" - (9290522)

10pc. **S4** - Wood Screw #8 x 3" - (9290530)

Part Identification (Reduced Part Size)

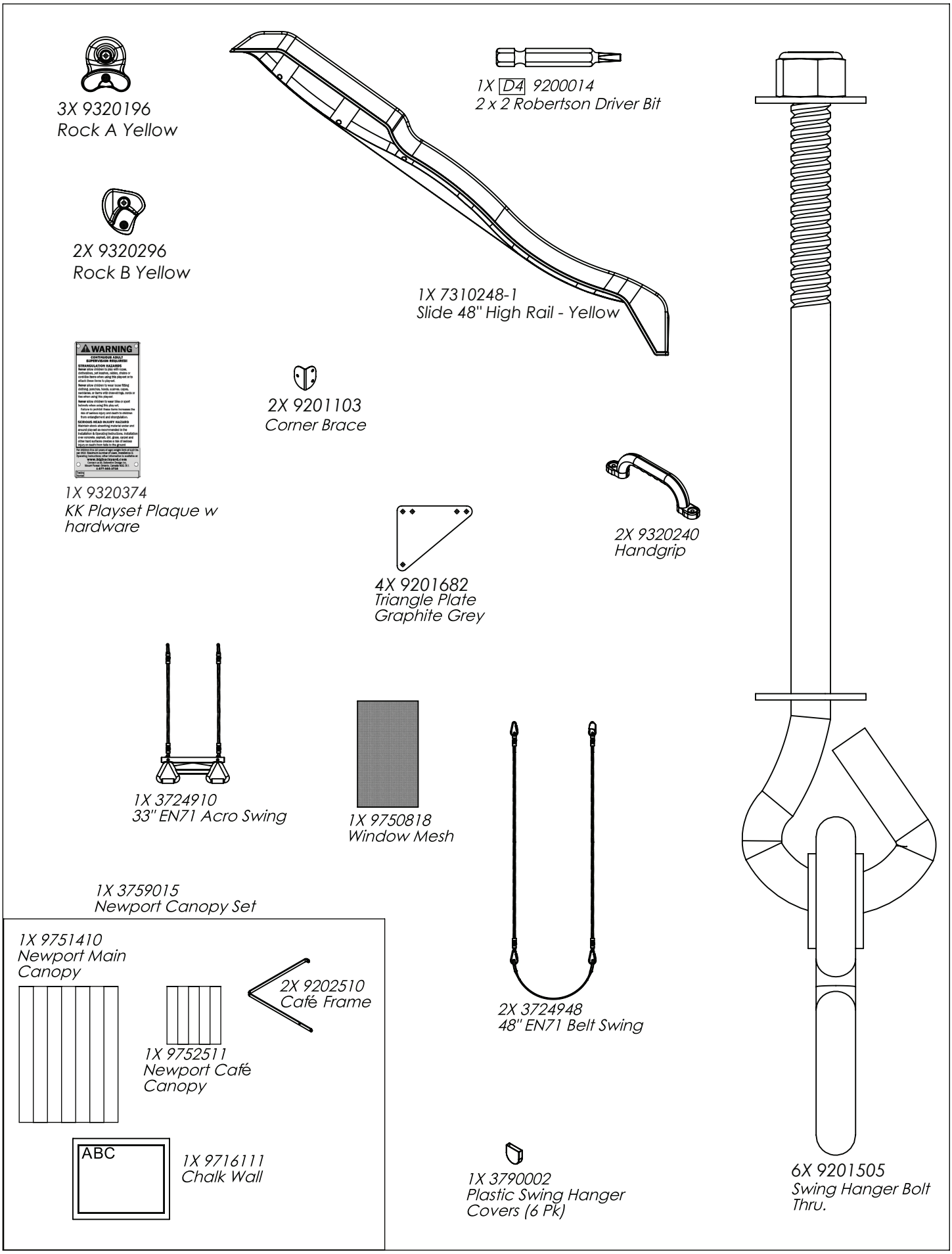

1 Inventory Parts - Read This Before Starting Assembly

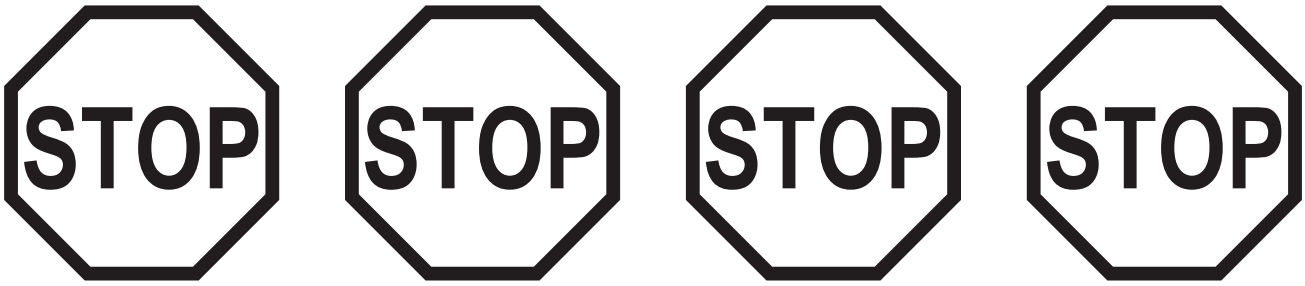

Inventory should be completed before starting installation. KidKraft will not cover costs of any additional installation trip due to missing or damaged pieces.

A. This is the time for you to inventory all your hardware, wood and accessories, referencing the parts identification sheets. This will assist you with your assembly.

• The wood pieces will have the key number stamped on the ends of the boards. Organize the wood pieces by step, as per the key numbering system below.

2X 10157 2 x 4 x 83" (50mm x 100mm x 2108mm)

Quantity — Key Number — Part Size

B. Read the assembly manual completely, paying special attention to ANSI warnings; notes; and safety/maintenance information on pages 1 - 8.

If there are missing or damaged pieces, please contact the KidKraft Consumer Engagement team before going back to the retailer.

Order Replacement Parts 24/7

You can order replacement parts for this product 24 hours a day / 7 days a week:

Outdoor Swingsets and Playhouse Parts Ordering
https://parts.kidkraft.com/partsorderemail

If you have assembly or product questions, please refer to the front cover for direct contact information for our Consumer Engagement team OR you can also use this QR code with your smartphone for common questions and contact information.

KidKraft Help Center **https://kidkraft.zendesk.com/hc/en-us/**

Step 2: Swing Beam Assembly

Fig. 2.4

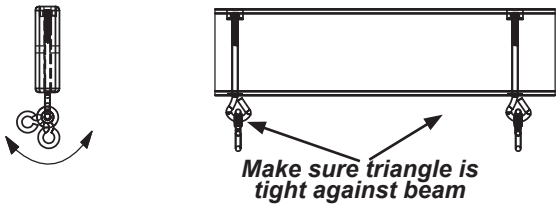

⚠WARNING: For your child's safety, orientate the swing hangers as shown to ensure your swing will have proper swing motion when installed. Failure to do so could result in premature failure of the swing hanger or swing chain.

A: In the middle holes of (1249) Back Beam install 2 Bolt-Thru Swing Hangers (fig. 2.4) making sure the swing hangers are oriented in the direction shown in fig. 2.4 to maintain proper swing motion.

B: In the end holes of (1248) Front Beam install 4 Bolt-Thru Swing Hangers (fig. 2.1) making sure the swing hangers are oriented in the direction shown in fig. 2.4 to maintain proper swing motion.

Fig. 2.1

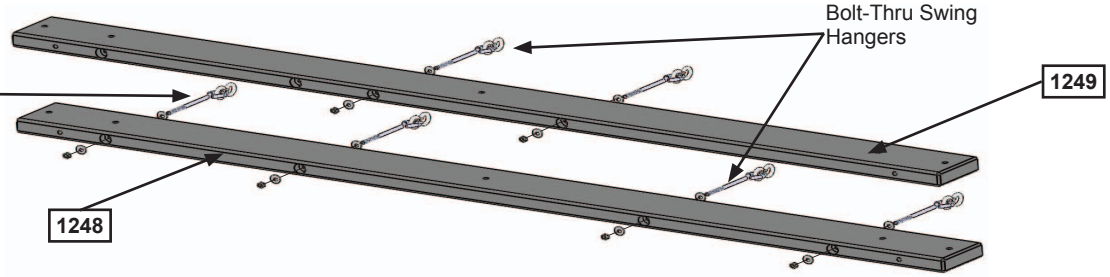

C: Attach 1 Triangle Plate to the ends of each (1248) Front Beam and (1249) Back Beam using 1 (G1) 5/16 x 1-1/2" Hex Bolt (with lock washer, flat washer and t-nut) in the hole indicated in fig. 2.2 & 2.3. **Correct hole usage is very important.**

Fig. 2.2

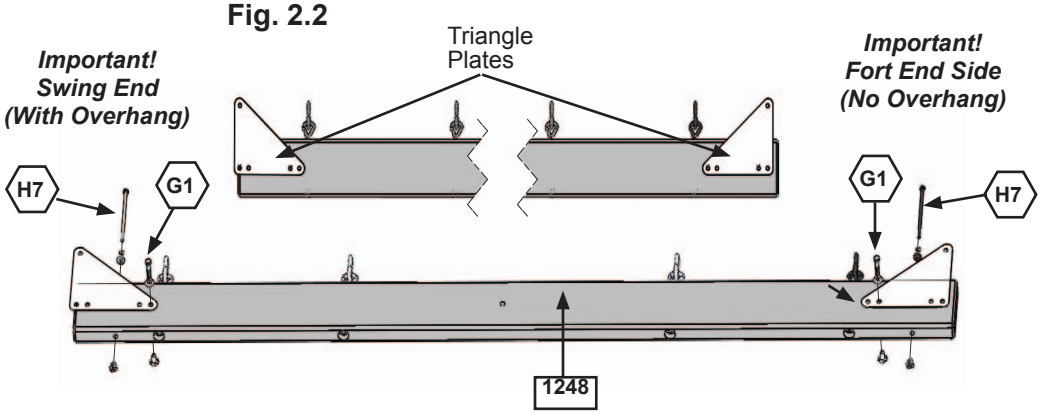

D: Attach 1 (H7) 1/4 x 5-1/2" Hex Bolt (with lock washer, flat washer and t-nut) to the ends of each (1248) Front Beam and (1249) Back Beam. The bolts do not attach to anything, but **MUST** be installed to the beams to prevent splitting and checking of wood. (fig. 2.2 & 2.3)

Fig. 2.3

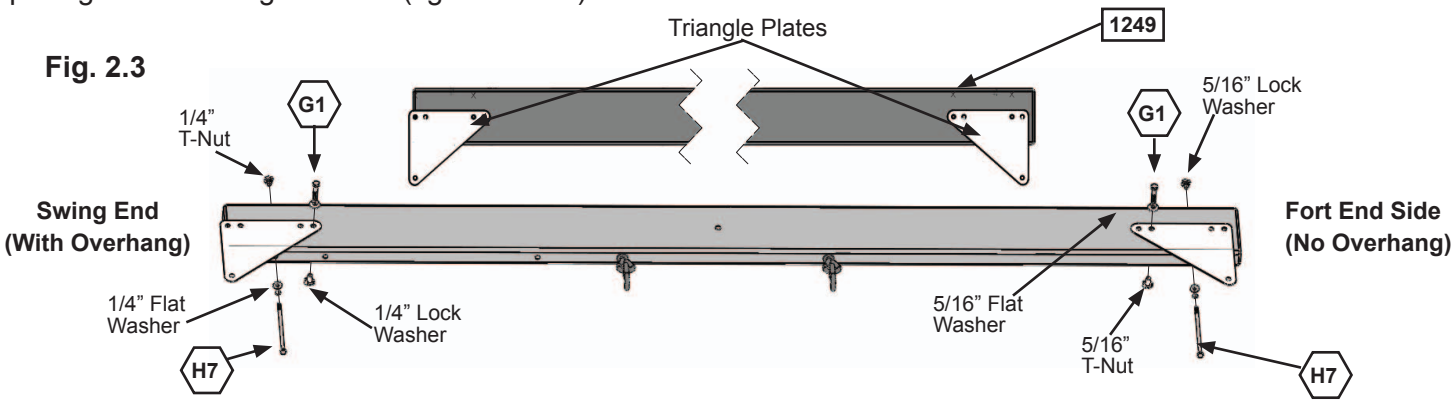

Wood Parts	Hardware	Other Parts
1 x 1248 Front Beam 1-1/2 x 5-3/8 x 94"	4 x H7 1/4 x 5-1/2" Hex Bolt (1/4" flat washer, 1/4" lock washer, 1/4" t-nut)	1 x Bolt-Thru Swing Hangers (pkg of 6)
1 x 1249 Back Beam 1-1/2 x 5-3/8 x 94"	4 x G1 5/16 x 1-1/2" Hex Bolt (5/16" flat washer, 5/16" lock washer, 5/16" t-nut)	1 x Triangle Plate (pkg of 4)

Step 3: Swing End Assembly

A: Attach 2 (1863) SW Posts to (1856) SW Upright using 2 (G4) 5/16 x 4” Hex Bolts (with lock washer, flat washer and t-nut). (fig. 3.1)

B: Attach (1862) SW Support to both (1863) SW Posts and (1856) SW Upright using 3 (G5) 5/16 x 4-1/2” Hex Bolts (with lock washer, flat washer and t-nut). (fig. 3.1)

Fig. 3.1

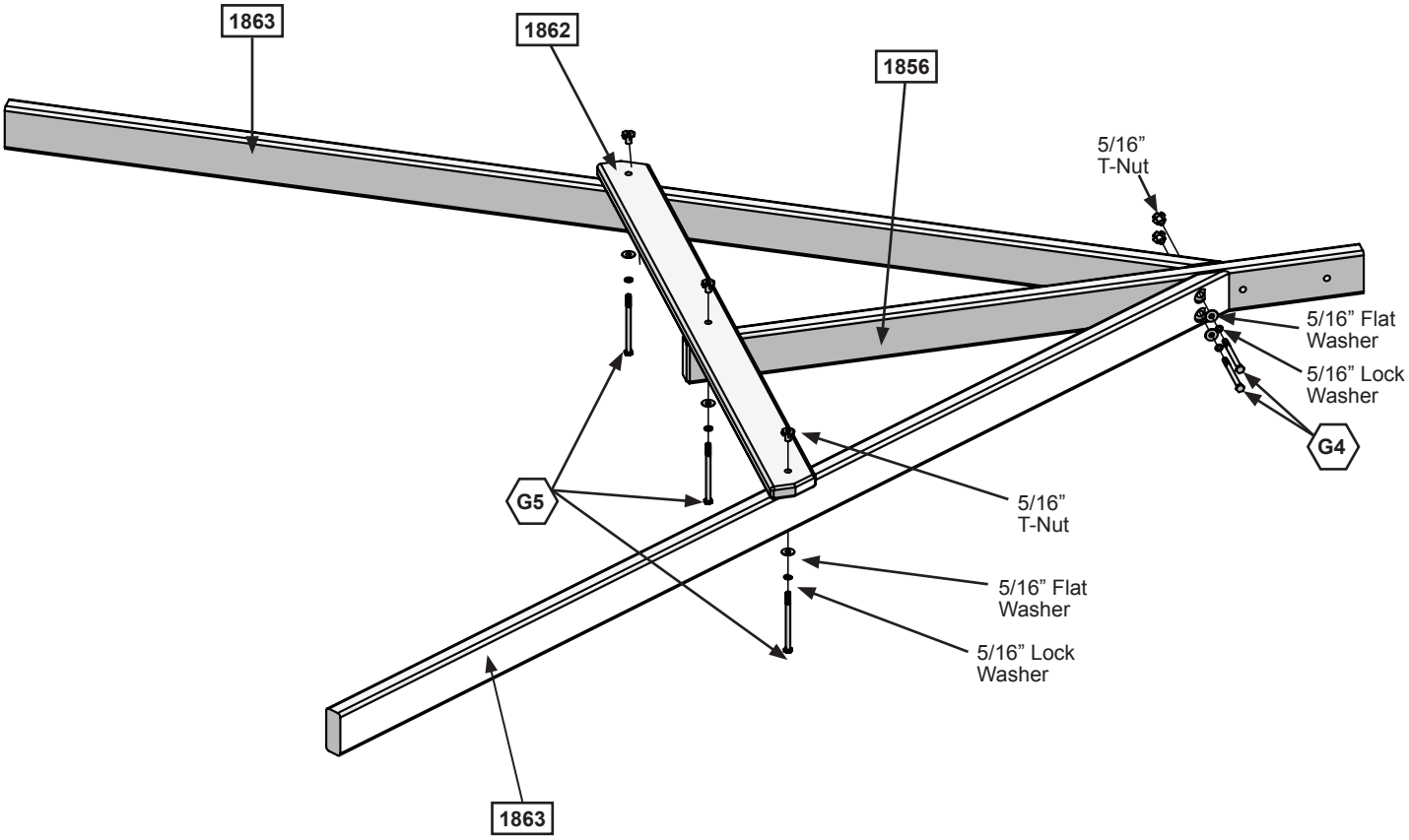

Wood Parts		Hardware	
2 x 1863	SW Post 1-3/8 x 3-3/8 x 86-11/16”	2 x G4	5/16 x 4” Hex Bolt (5/16” lock washer, 5/16” flat washer, 5/16” t-nut)
1 x 1862	SW Support 1 x 3-1/4 x 46-1/2”		
1 x 1856	SW Upright 1-3/8 x 3-3/8 x 48-5/16”	3 x G5	5/16 x 4-1/2” Hex Bolt (5/16” lock washer, 5/16” flat washer, 5/16” t-nut)

Step 4: Attach Swing End to Swing Beam

A: Place (4919) SW Rail Block in the centre between (1248) Front Beam and (1249) Back Beam and attach with 1 (H8) 1/4 x 4-1/4” Hex Bolt (with lock washer, flat washer and t-nut). (fig. 4.1 & 4.2)

Fig. 4.1

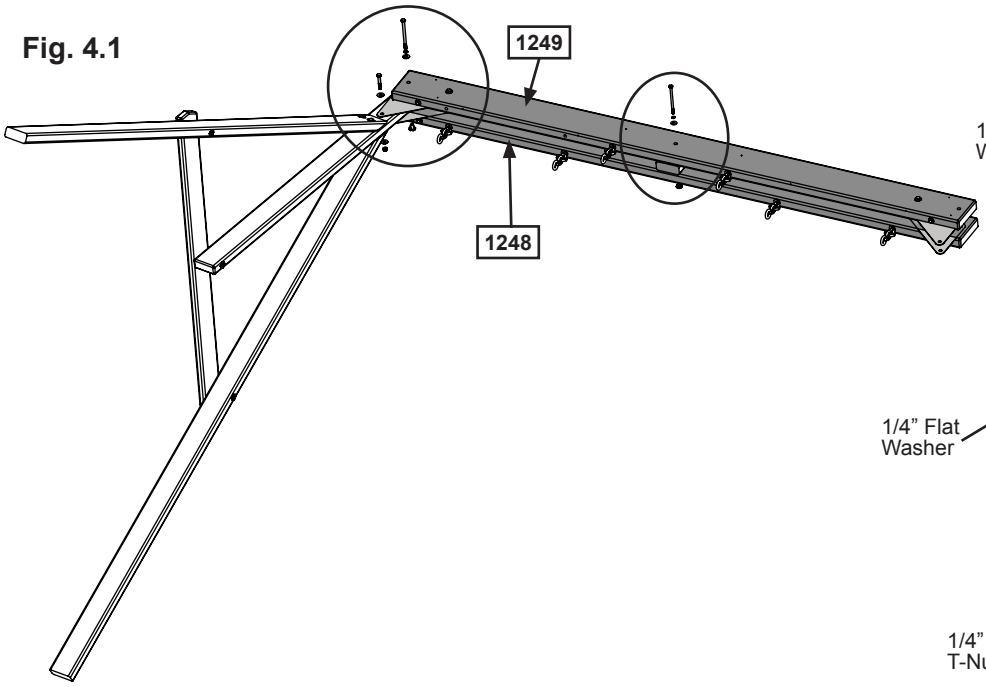

Fig. 4.2

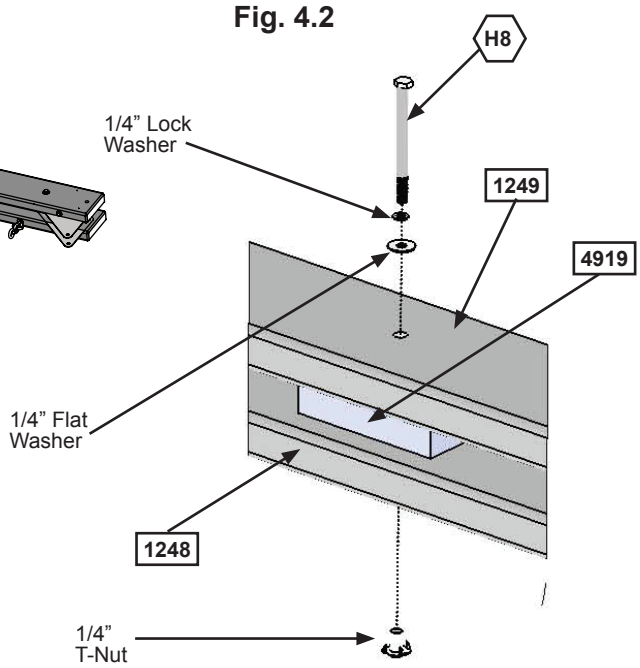

B: Attach Swing Beam Assembly to the side of the Swing End Assembly with the overhang (fig. 4.3 & 4.4) using 1 (G5) 5/16 x 4-1/2” Hex Bolt (with lock washer, flat washer and t-nut) in the top hole of Triangle Plate and 1 (G8) 5/16 x 2” Hex Bolt (with 2 flat washers and lock nut) in the bottom hole of Triangle Plate. (fig. 4.4) Make sure Swing End Assembly flares out at an angle. (fig. 4.3)

Fig. 4.3

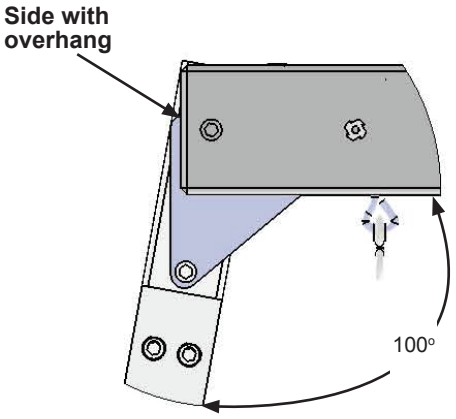

Fig. 4.4

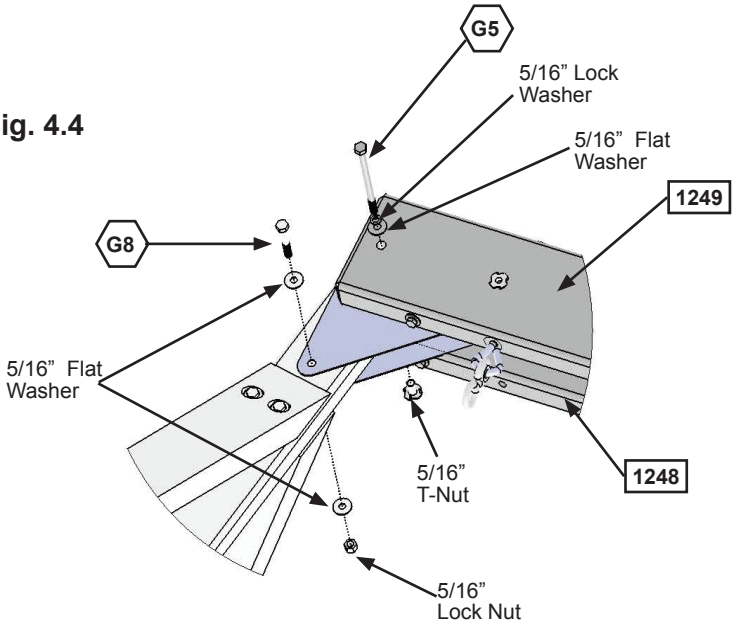

Wood Parts

1 x 4919 **SW Rail Block 1-3/8 x 3-3/8 x 5-3/8”**

Hardware

1 x H8 **1/4 x 4-1/4” Hex Bolt (1/4” lock washer, 1/4” flat washer, 1/4” t-nut)**

1 x G5 **5/16 x 4-1/2” Hex Bolt (5/16” lock washer, 5/16” flat washer, 5/16” t-nut)**

1 x G8 **5/16 x 2” Hex Bolt (5/16” flat washer x2, 5/16” lock nut)**

Step 5: Cafe Wall Assembly

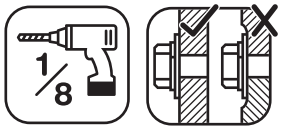

A: Attach (1914) Cafe Ground with 4 (H2) ¼ x 2” Hex Bolts (with lock washer, flat washer and t-nut); (1760) Floor using 2 (H2) ¼ x 2” Hex Bolts (with lock washer, flat washer and t-nut) in the bottom holes, noticing hole locations; (1923) Side Top with 2 (H2) ¼ x 2” Hex Bolts (with lock washer, flat washer and t-nut) and (1981) Top Side with 2 (H2) ¼ x 2” Hex Bolts (with lock washer, flat washer and t-nut) to 2 (1500) Posts as shown in fig. 5.1, 5.2 and 5.3.

Note: Pre-drill all holes using a 1/8” drill bit before installing the lag screws.

B: Make sure assembly is square and then fasten (1760) Floor to (1500) Posts in the top holes using 2 (LS1) ¼ x 1-1/2” Lag Screws (with flat washer). (fig. 5.1 and 5.3)

Fig. 5.1

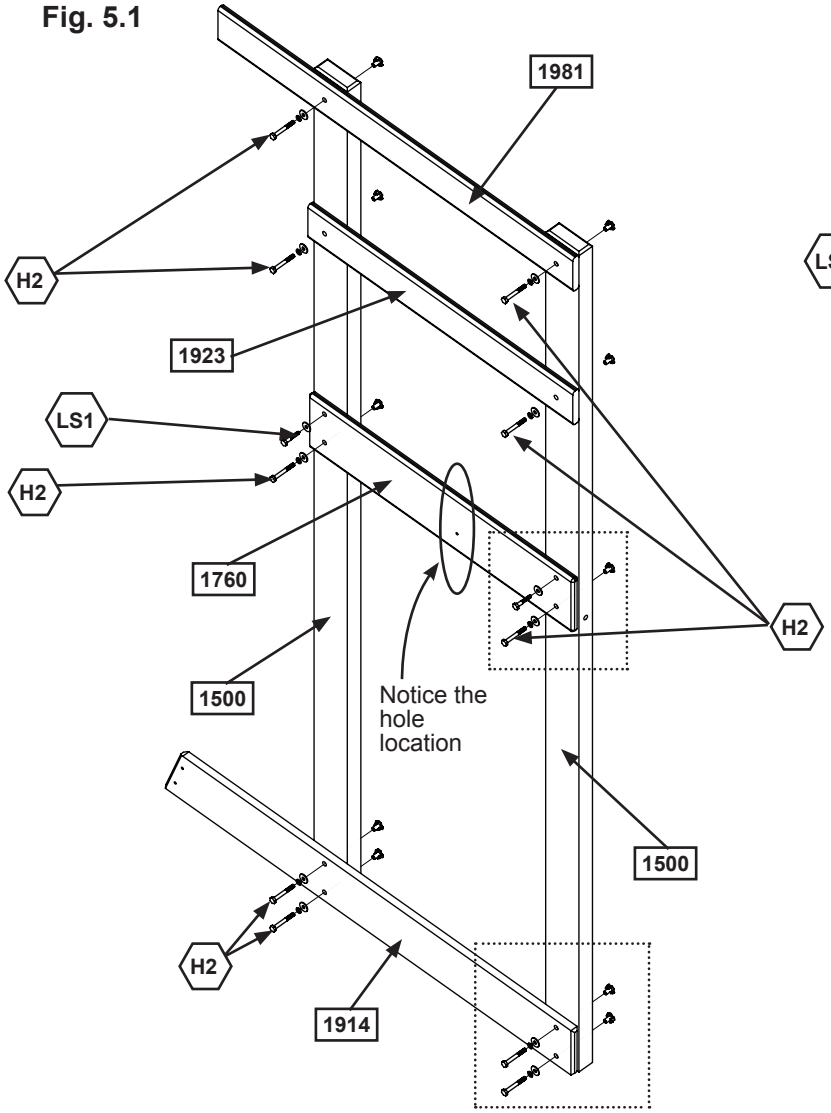

Fig. 5.2

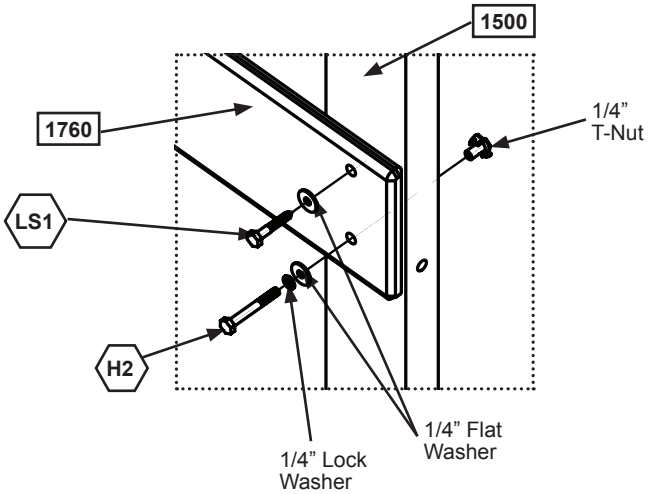

Fig. 5.3

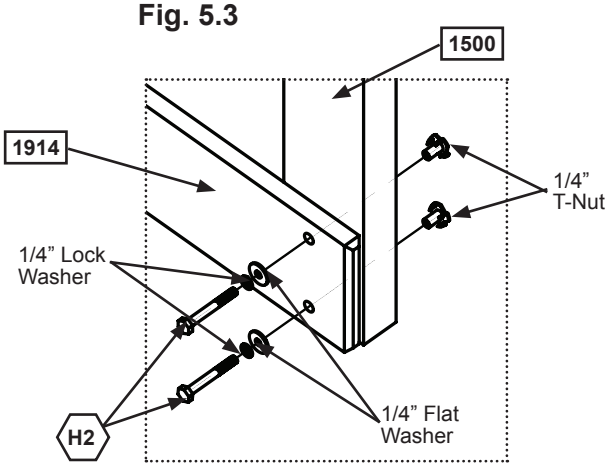

Wood Parts

- 1 x 1914 **Cafe Ground 5/8 x 4-1/2 x 41-1/2”**
- 2 x 1500 **Post 1-3/8 x 3-3/8 x 83”**
- 1 x 1760 **Floor 5/8 x 5-3/8 x 26-7/8”**
- 1 x 1923 **Side Top 5/8 x 3-3/8 x 26-7/8”**
- 1 x 1981 **Top Side 5/8 x 3-3/8 x 36”**

Hardware

- 10 x H2 **1/4 x 2” Hex Bolts (1/4” lock washer, 1/4” flat washer and 1/4” t-nut)**
- 2 x LS1 **1/4” x 1-1/2” Lag Screws (1/4” flat washer)**

Step 6: Swing Wall Assembly
Part 1

A: Attach (1928) Lower Side, noticing the side the bolt hole on the extended end is on, using 4 (H2) 1/4 x 2” Hex Bolts (with lock washer, flat washer and t-nut); (1924) SW Floor (in the bottom holes) and (1925) SW Top using 2 (H2) 1/4 x 2” Hex Bolts (with lock washer, flat washer and t-nut) for each board to 2 (1500) Posts. (fig. 6.1)
Note: Keep all bolts loose.

B: On the side indicated in fig. 6.1, attach (0369) Lower Diagonal to (1928) Lower Side with 1 (H2) 1/4 x 2” Hex Bolt (with lock washer, flat washer and t-nut).

Fig. 6.1

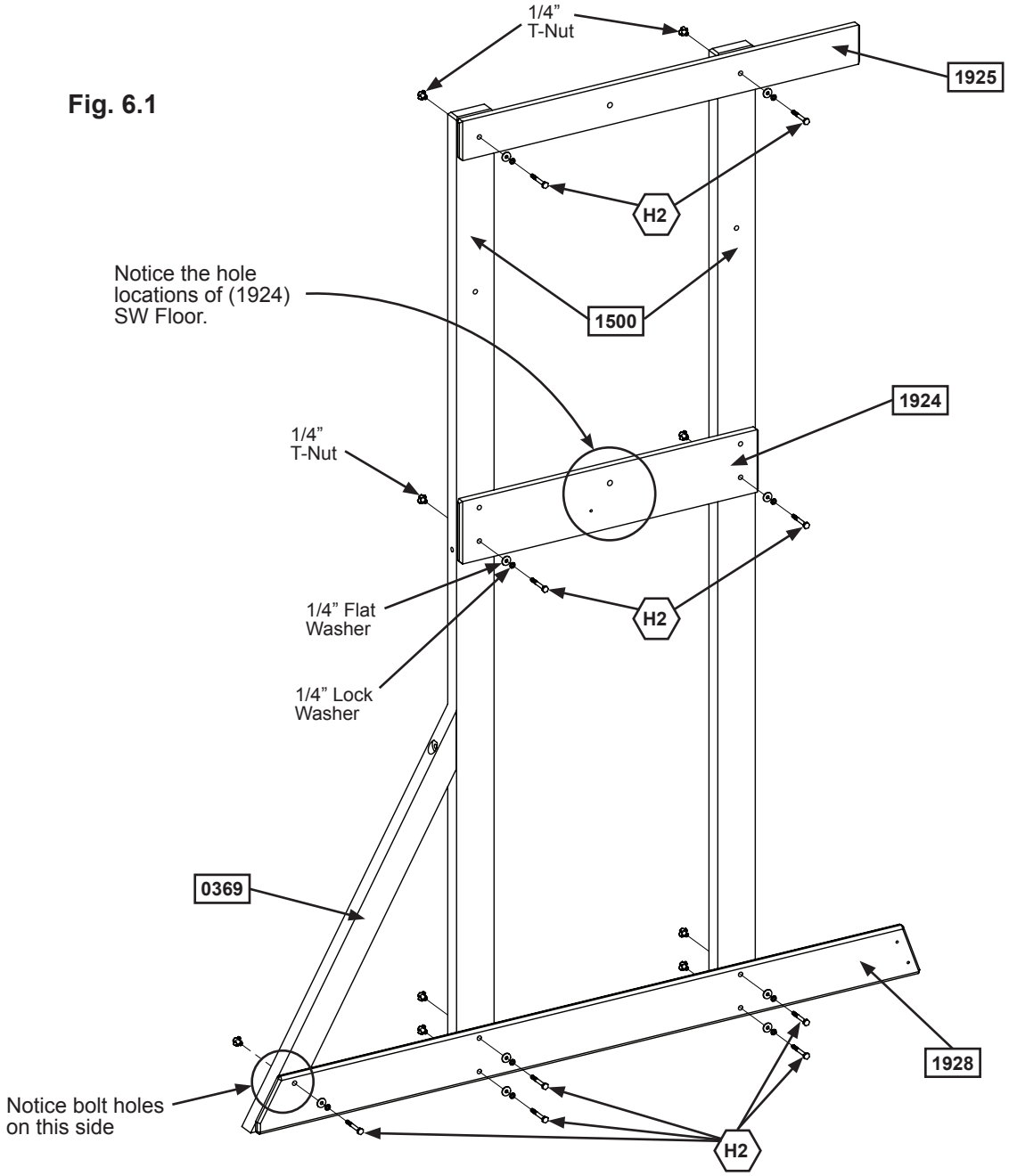

Wood Parts

- 1 x 1924 **SW Floor 5/8 x 5-3/8 x 26-7/8”**
- 1 x 1925 **SW Top 5/8 x 3-3/8 x 36”**
- 1 x 1928 **Lower Side 5/8 x 4-1/2 x 59-11/16”**
- 1 x 0369 **Lower Diagonal 1-3/8 x 2-1/2 x 37”**
- 2 x 1500 **Post 1-3/8 x 3-3/8 x 83”**

Hardware

- 9 x H2 **1/4 x 2” Hex Bolts (1/4” lock washer, 1/4” flat washer and 1/4” t-nut)**

Step 6: Swing Wall Assembly
Part 2

C: Place (1861) SW Mount across (1924) SW Floor and (1925) SW Top and attach using 2 (G4) 5/16 x 4” Hex Bolts (with lock washer, flat washer and t-nut) as shown in fig. 6.2. Notice the side hole locations are towards the top of the board.
Note: Pre-drill all holes using a 1/8” drill bit before installing the lag screws.

D: Make sure assembly is square then fasten (1924) SW Floor to (1500) Posts in the top holes using 2 (LS1) 1/4 x 1-1/2” Lag Screws (with flat washer); and (0369) Lower Diagonal to (1500) Post with 1 (LS3) 1/4 x 3” Lag Screw (with flat washer). (fig. 6.2)

E: Tighten all bolts.

Fig. 6.2

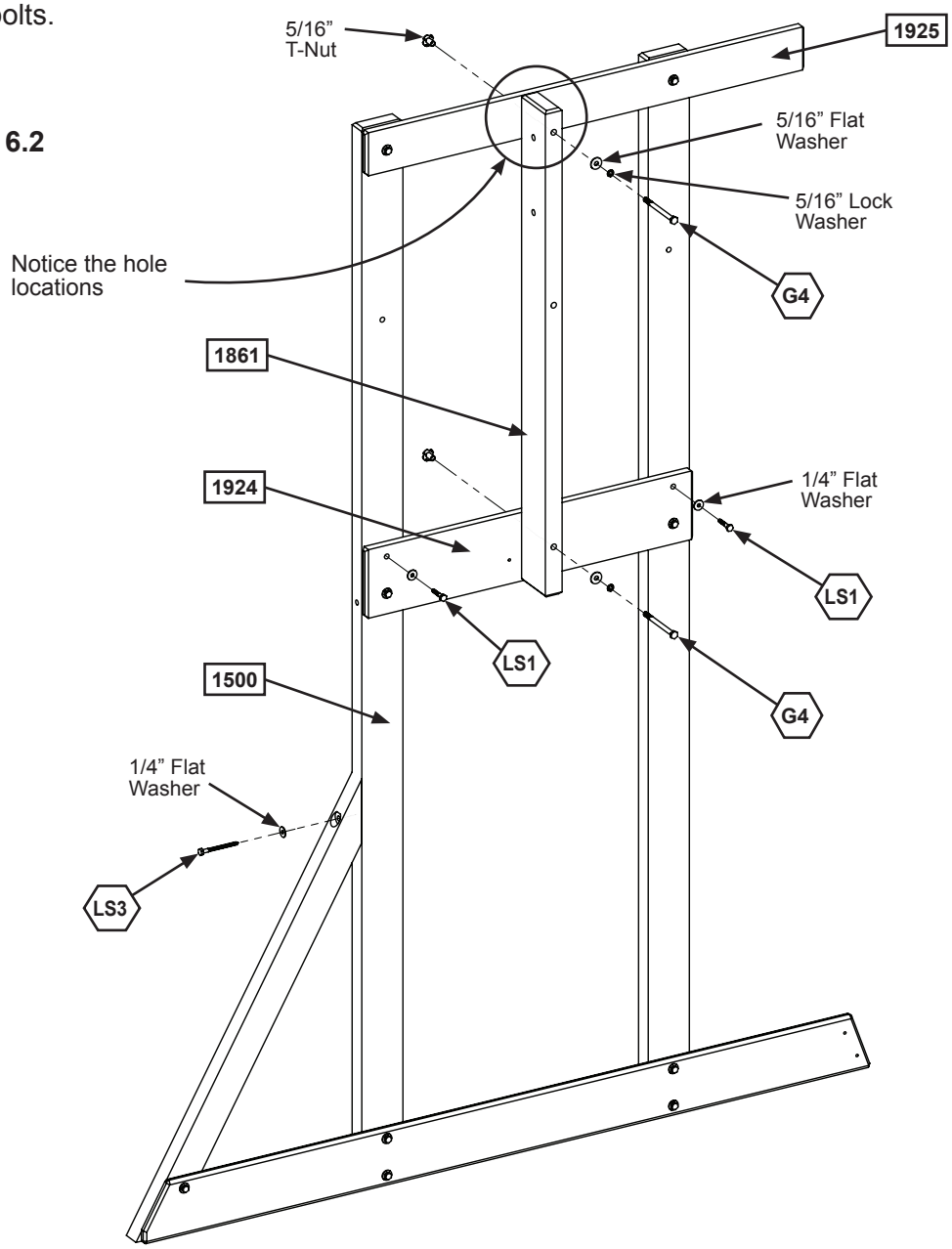

Wood Parts	Hardware
1 x 1861 SW Mount 1-3/8 x 3-3/8 x 38-1/8”	2 x G4 5/16 x 4” Hex Bolts (5/16” lock washer, 5/16” flat washer and 5/16” t-nut)
	2 x LS1 1/4” x 1-1/2” Lag Screws (1/4” flat washer)
	1 x LS3 1/4” x 3” Lag Screws (1/4” flat washer)

Step 7: Fort Frame Assembly

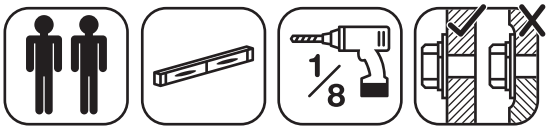

A: On the front of the assembly side without the (0369) Lower Diagonal, attach (1764) Floor Front to both (1500) Posts, noticing the bolt holes are towards the bottom of the board, with 2 (H6) 1/4 x 4-3/4” Hex Bolts (with lock washer, flat washer and t-nut). (fig. 7.1 and 7.2)

B: On the back side of the assembly attach (1913) Back Floor to both (1500) Posts, noticing the middle bolt hole is oriented towards the bottom, with 2 (H4) 1/4 x 4” Hex Bolts (with lock washer, flat washer and t-nut) in the bottom holes. (fig. 7.1 and 7.2)

C: Make sure (1913) Back Floor is level and square to the posts, then attach with 2 (S7) #12 x 2” Pan Screws (with 3/16” flat washer). (fig. 7.1 and 7.2)

Fig. 7.1

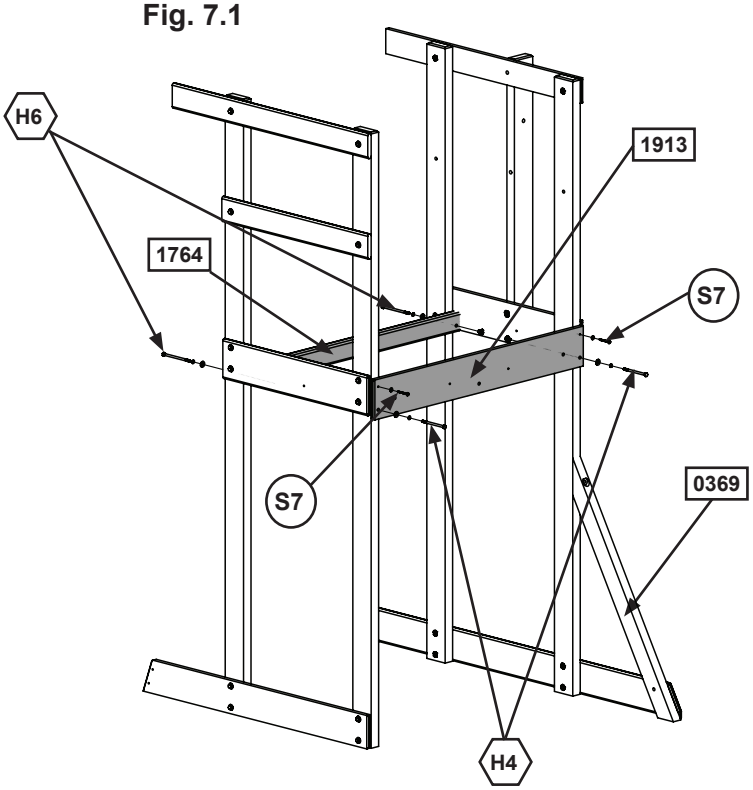

Fig. 7.2

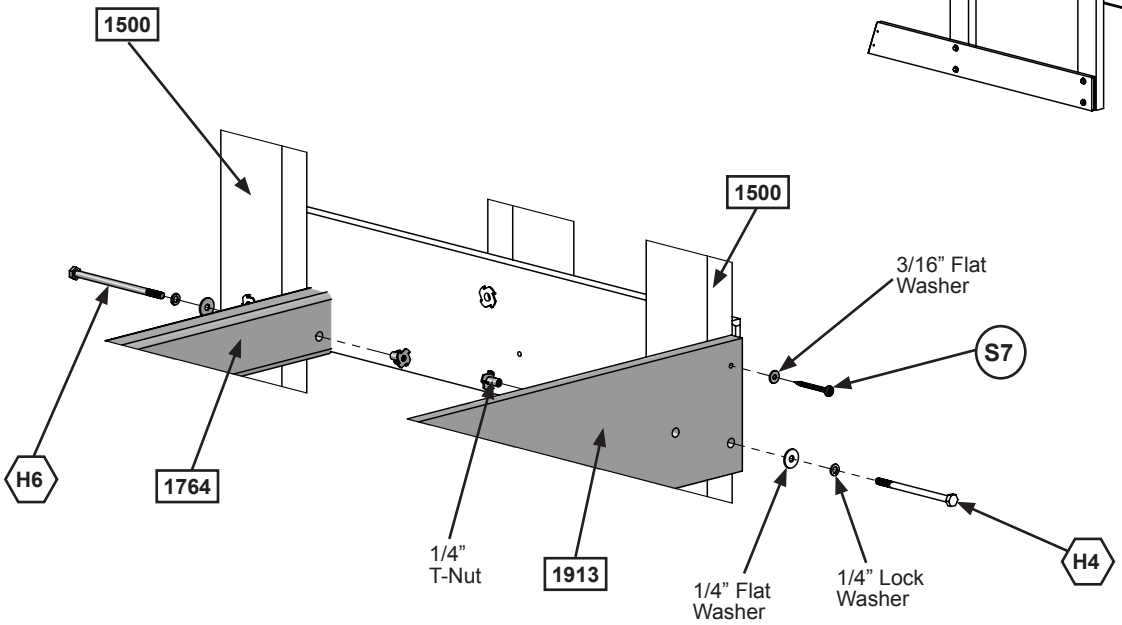

Wood Parts

1 x 1764 **Floor Front 1-3/8 x 2-1/2 x 38-1/2”**

1 x 1913 **Back Floor 5/8 x 5-3/8 x 38-3/4”**

Hardware

2 x H6 **1/4 x 4-3/4” Hex Bolts (1/4” lock washer, 1/4” flat washer and 1/4” t-nut)**

2 x H4 **1/4 x 4” Hex Bolts (1/4” lock washer, 1/4” flat washer and 1/4” t-nut)**

2 x S7 **#12 x 2” Pan Screws (3/16” flat washer)**

Step 8: Attach Lower Back

Note: Pre-drill all holes using a 1/8” drill bit before installing the lag screws.

A: Attach (1917) Lower Back to the bottom of the (1500) Posts on the back of the assembly with 2 (LS3) ¼ x 3” Lag Screws (with flat washer) in the top (pre-drilled) holes and 2 (S7) #12 x 2” Pan Screws (with 3/16” flat washers) in the bottom holes. (fig. 8.1 and 8.2)

Fig. 8.2

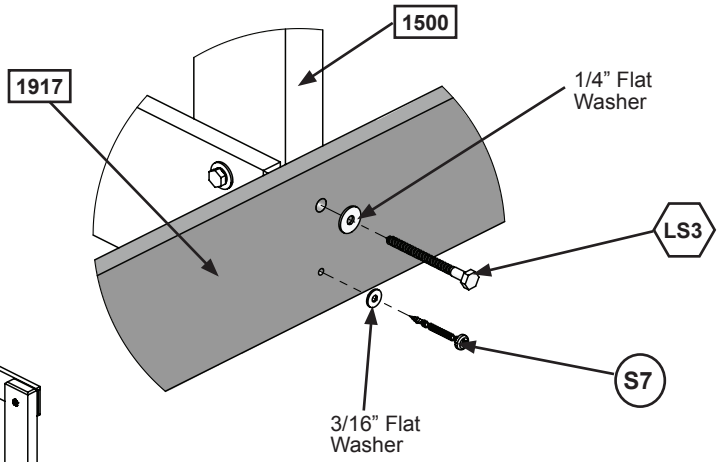

Fig. 8.1

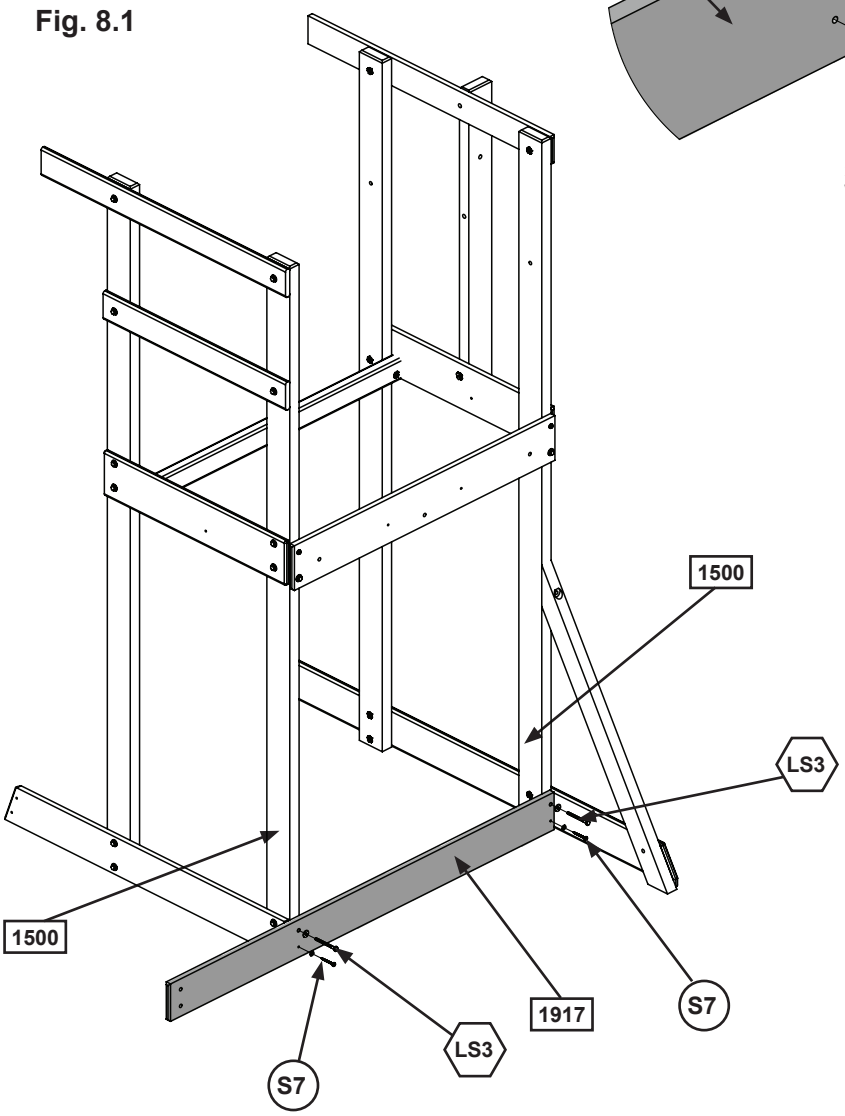

Wood Parts

1 x 1917 **Lower Back 5/8 x 4-1/2 x 56-7/8”**

Hardware

2 x LS3 **1/4 x 3” Lag Screws (1/4” flat washer)**

2 x S7 **#12 x 2” Pan Screws (3/16” flat washer)**

Step 9: Attach Side Joist

A: From inside the assembly attach (1761) Side Joist to (1913) Back Floor with 2 (H2) 1/4 x 2” Hex Bolts (with lock washer, flat washer and t-nut) in the outside holes and 2 (S7) #12 x 2” Pan Screws (with 3/16” flat washer) in the inside holes, as shown in fig. 9.1 and 9.2).

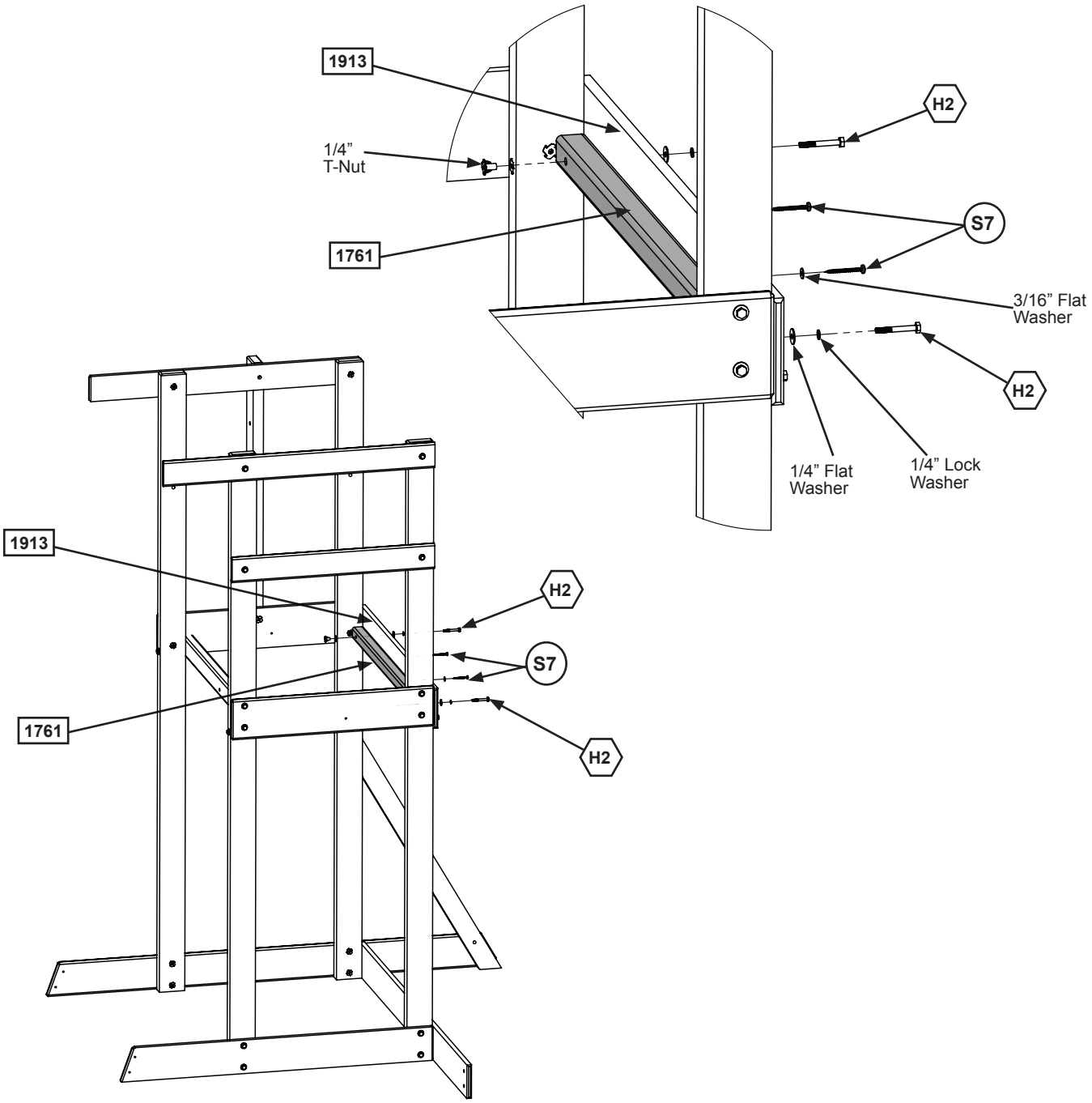

Wood Parts

1 x 1761 **Side Joist 1-1/2 x 1-1/2 x 34-3/4”**

Hardware

2 x H2 **1/4 x 2” Hex Bolts (1/4” lock washer, 1/4” flat washer and 1/4” t-nut)**

2 x S7 **#12 x 2” Pan Screws (3/16” flat washer)**

Step 10: Rock Wall Frame
Part 1

A: Attach (1766) Corner Block to (0349) Rock Rail, flush to the bottom and long side, with 2 (S4) #8 x 3” Wood Screws, as shown in fig. 10.1 and 10.2. Notice which direction the angled edge of (0349) Rock Rail faces.

Fig. 10.1

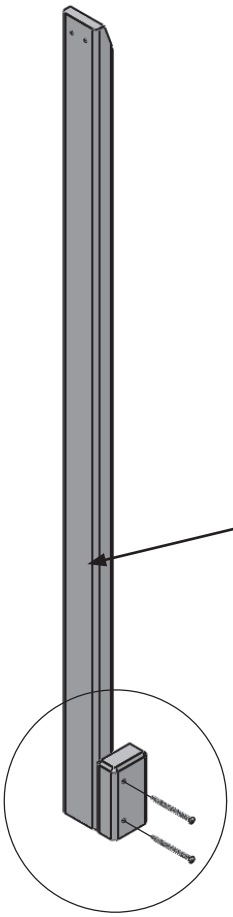

Fig. 10.2

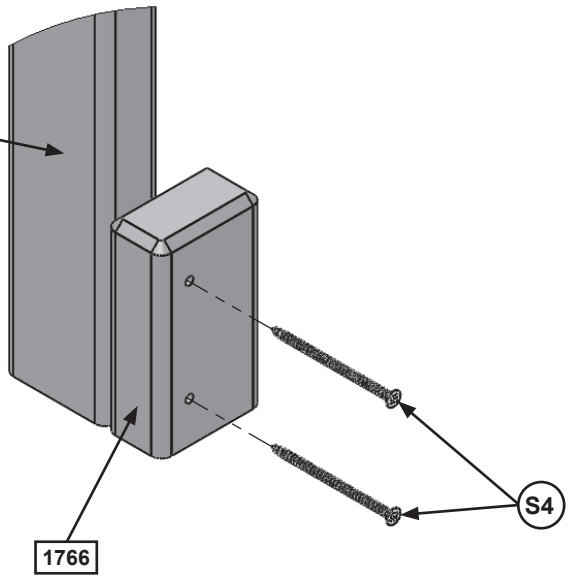

Wood Parts

1 x 0349 **Rock Rail 1-3/8 x 2-1/2 x 51”**

1 x 1766 **Corner Block 1-3/8 x 2-1/2 x 4-1/2”**

Hardware

2 x S4 **#8 x 3” Wood Screws**

Step 10: Rock Wall Frame
Part 2

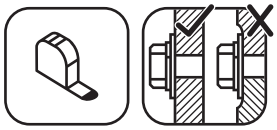

B: Place Rock Rail Assembly, from Step 10 Part 1, 5/8” above (1764) Floor Front and tight to (1500) Post on the Cafe Wall Side. (fig. 10.3 and 10.4). Attach (0349) Rock Rail to (1764) Floor Front using 2 (S15) #8 x 1-3/4” Wood Screws as shown in fig. 10.5.

C: Attach (1914) Cafe Ground to (1766) Corner Block with 2 (S2) #8 x 1-1/2” Wood Screws. (fig. 10.3 and 10.6)

Fig. 10.3

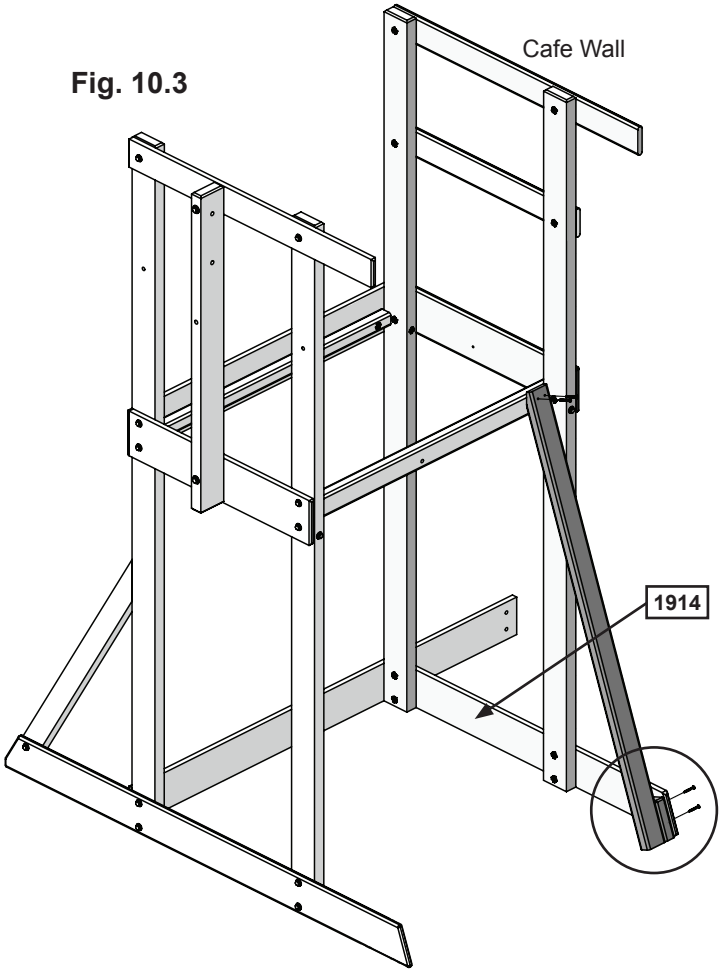

Fig. 10.4

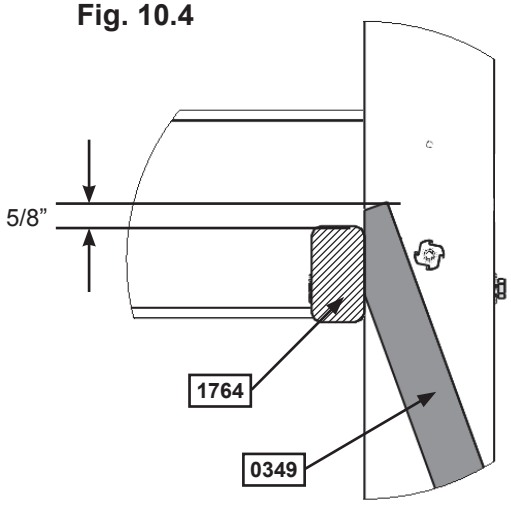

Fig. 10.5
Side View

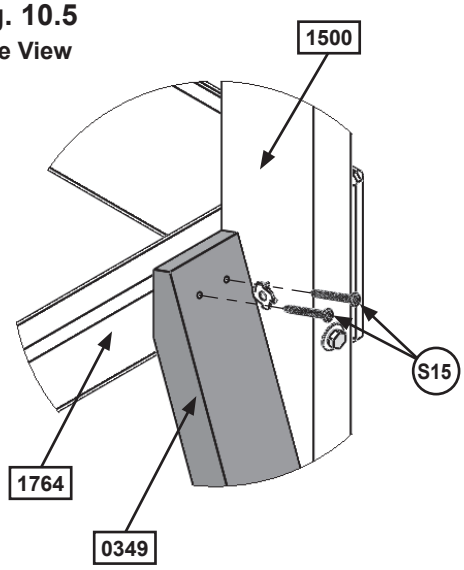

Fig. 10.6

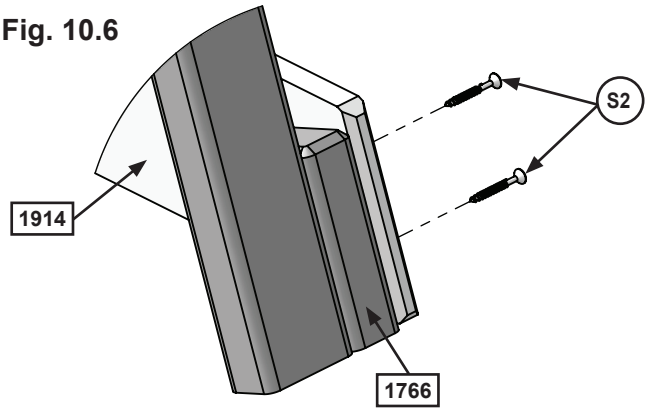

Hardware

2 x (S2) #8 x 1-1/2” Wood Screw

2 x (S15) #8 x 1-3/4” Wood Screw

Step 10: Rock Wall Frame
Part 3

D: Attach (1767) Lower Front to (0349) Rock Rail with 2 (S2) #8 x 1-1/2” Wood Screws. (fig. 10.7 and 10.8)

E: Place a second (1766) Corner Block flush to the top of (1928) Lower Side and tight to both (1767) Lower Front and (1928) Lower Side. Attach with 4 (S2) #8 x 1-1/2” Wood Screws as shown in fig. 10.9 and 10.10.

Fig. 10.7

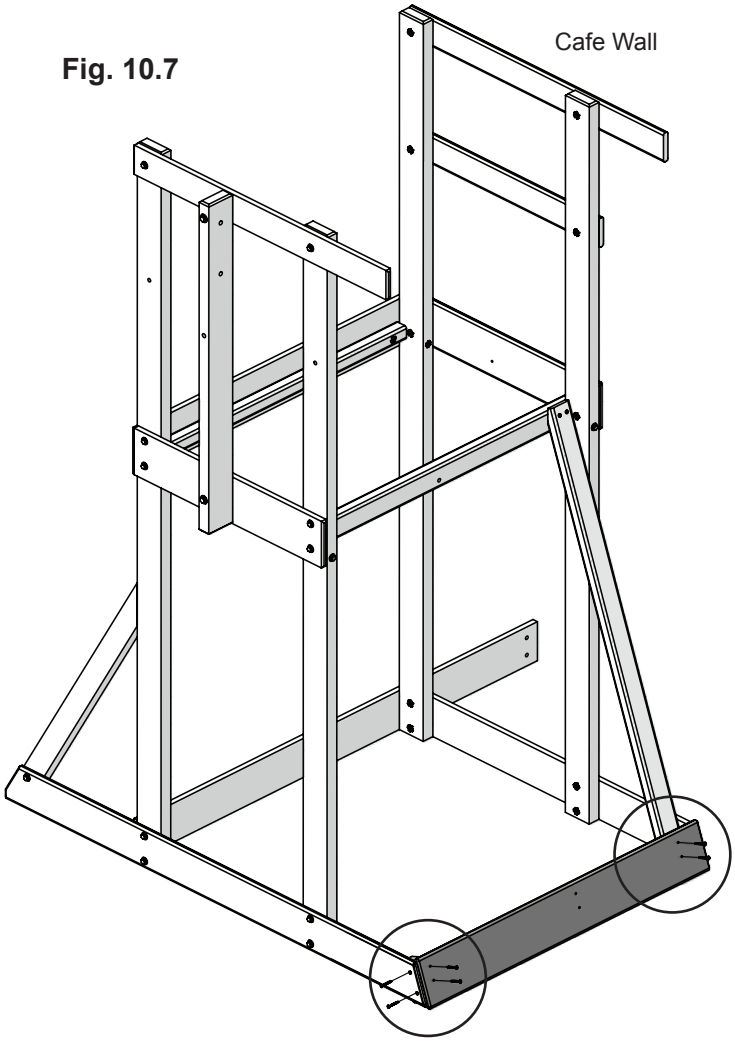

Fig. 10.8

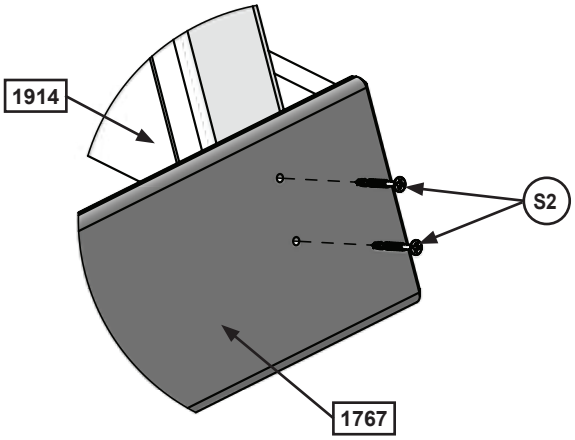

Fig. 10.9

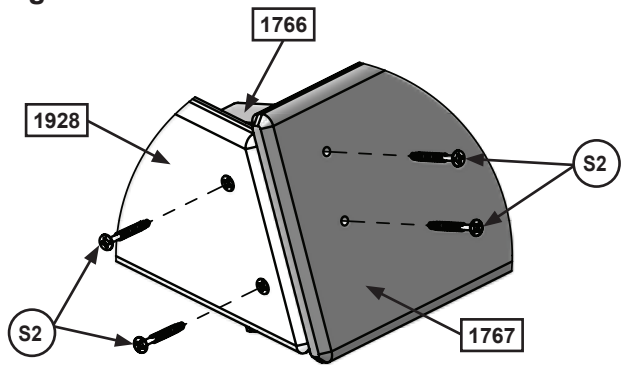

Fig. 10.10
Inside View

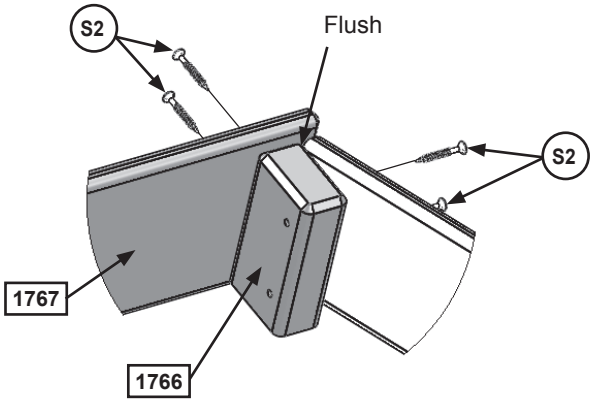

Wood Parts	Hardware
1 x 1766 Corner Block 1-3/8 x 2-1/2 x 4-1/2”	6 x S2 #8 x 1-1/2” Wood Screw
1 x 1767 Lower Front 5/8 x 5-3/8 x 39-3/4”	

Step 11: Attach Gusset to Fort

A: Make sure the assembly is square before proceeding.

B: From the inside of the assembly, attach (0312) Gusset flush to the outside edge of (1500) Post on the Swing Wall using 2 (S4) #8 x 3” Wood Screws. The other end of the gusset should be tight against (1764) Floor Front. (fig. 11.1 and 11.2)

C: Attach the other end of (0312) Gusset to (1764) Floor Front with 1 (S4) #8 x 3” Wood Screw and 1 (S3) #8 x 2-1/2” Wood Screw, as shown in fig. 11.1 and 11.2.

Fig. 11.1

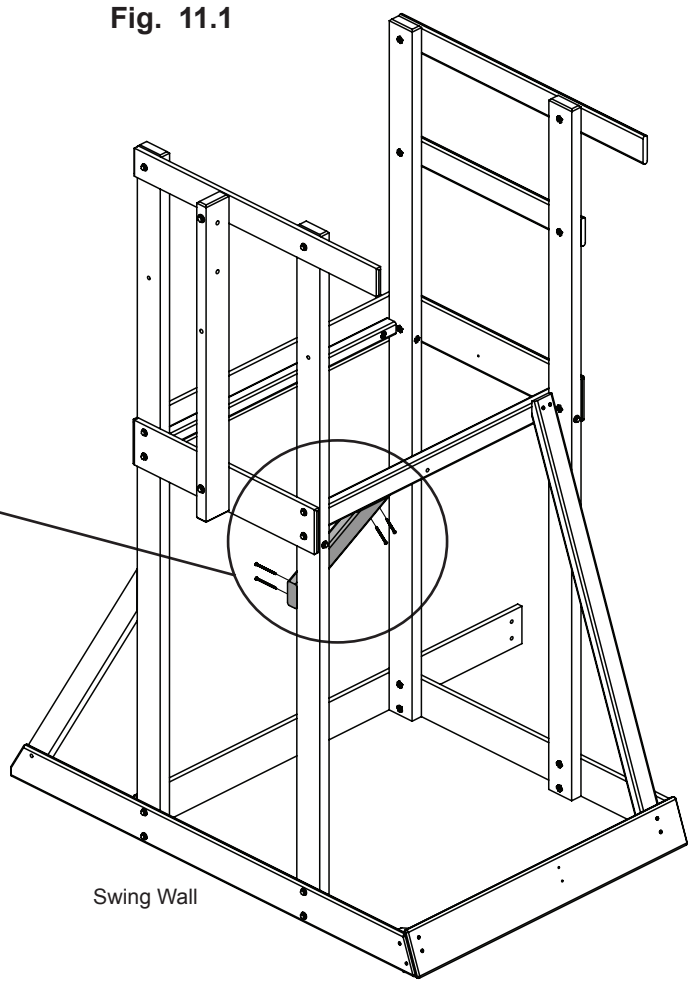

Fig. 11.2

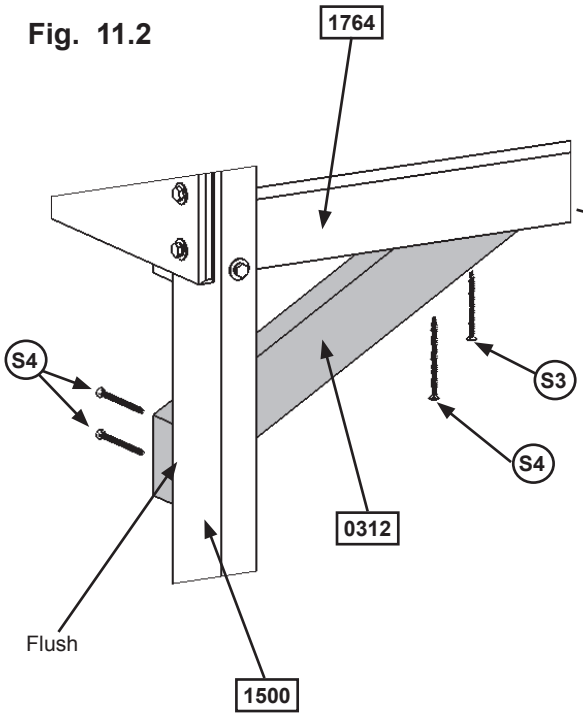

Wood Parts

1x 0312 **Gusset 1-3/8 x 2-1/2 x 16”**

Hardware

1 x S3 **#8 x 2-1/2” Wood Screw**

3 x S4 **#8 x 3” Wood Screw**

Step 12: Attach Floor Joist to Fort

A: From inside of the assembly, measure 3” down from the top of (1760) Floor and (1924) SW Floor then attach (1763) Floor Joist to each board with 1 (S4) #8 x 3” Wood Screw per end. (fig. 12.1)

Fig. 12.1

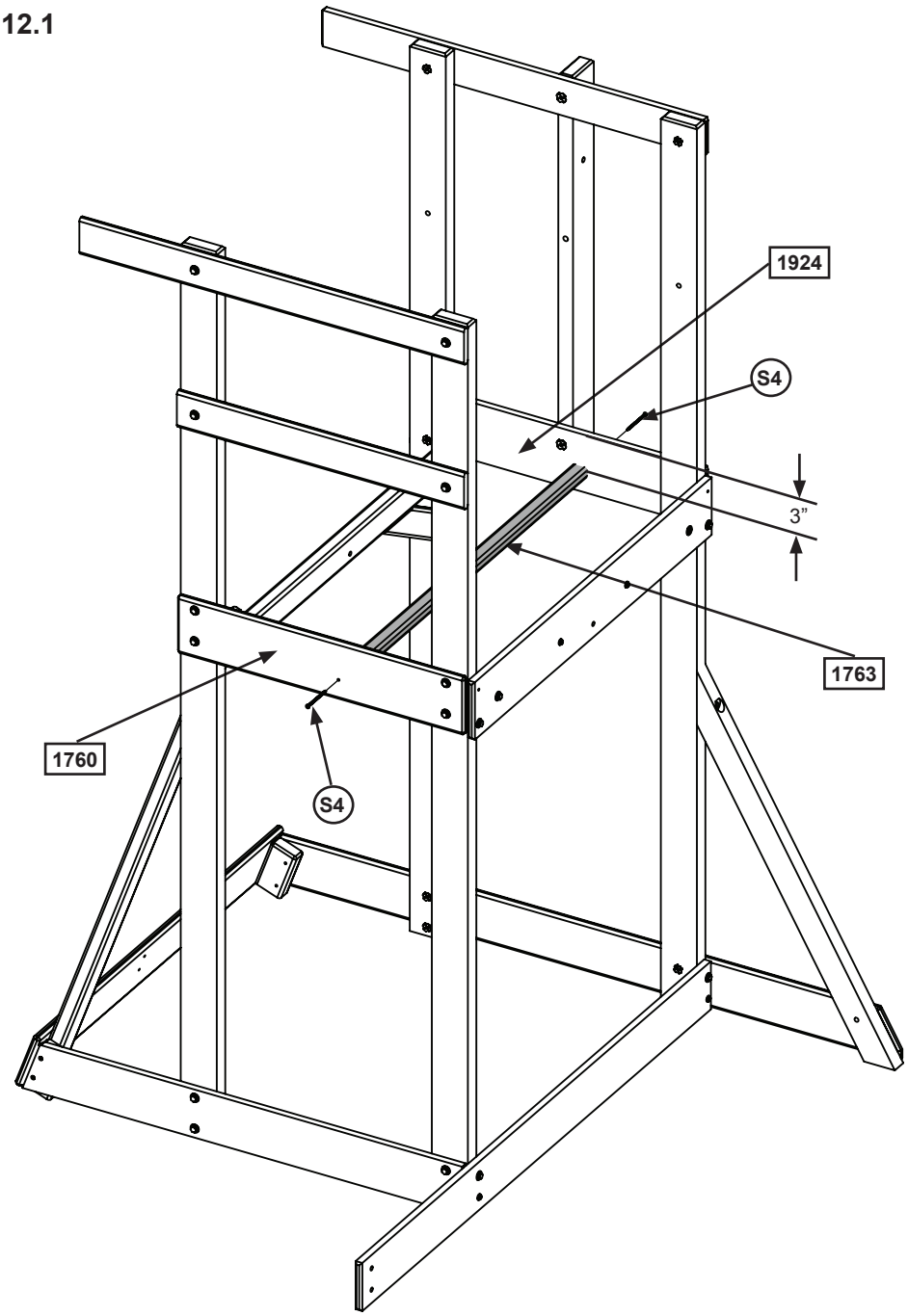

Wood Parts

1x 1763 **Floor Joist 5/4 x 2 x 38-1/2”**

Hardware

2 x S4 **#8 x 3” Wood Screw**

Step 13: Attach Gap Board and Floor Boards to Fort Part 1

A: Install 1 (1774) CE Gap Board to each end of the assembly attaching to (1761) Side Joist, (1763) Floor Joist and (1764) Floor Front using 5 (S2) #8 x 1-1/2” Wood Screws per board. (fig. 13.1)

Fig. 13.1

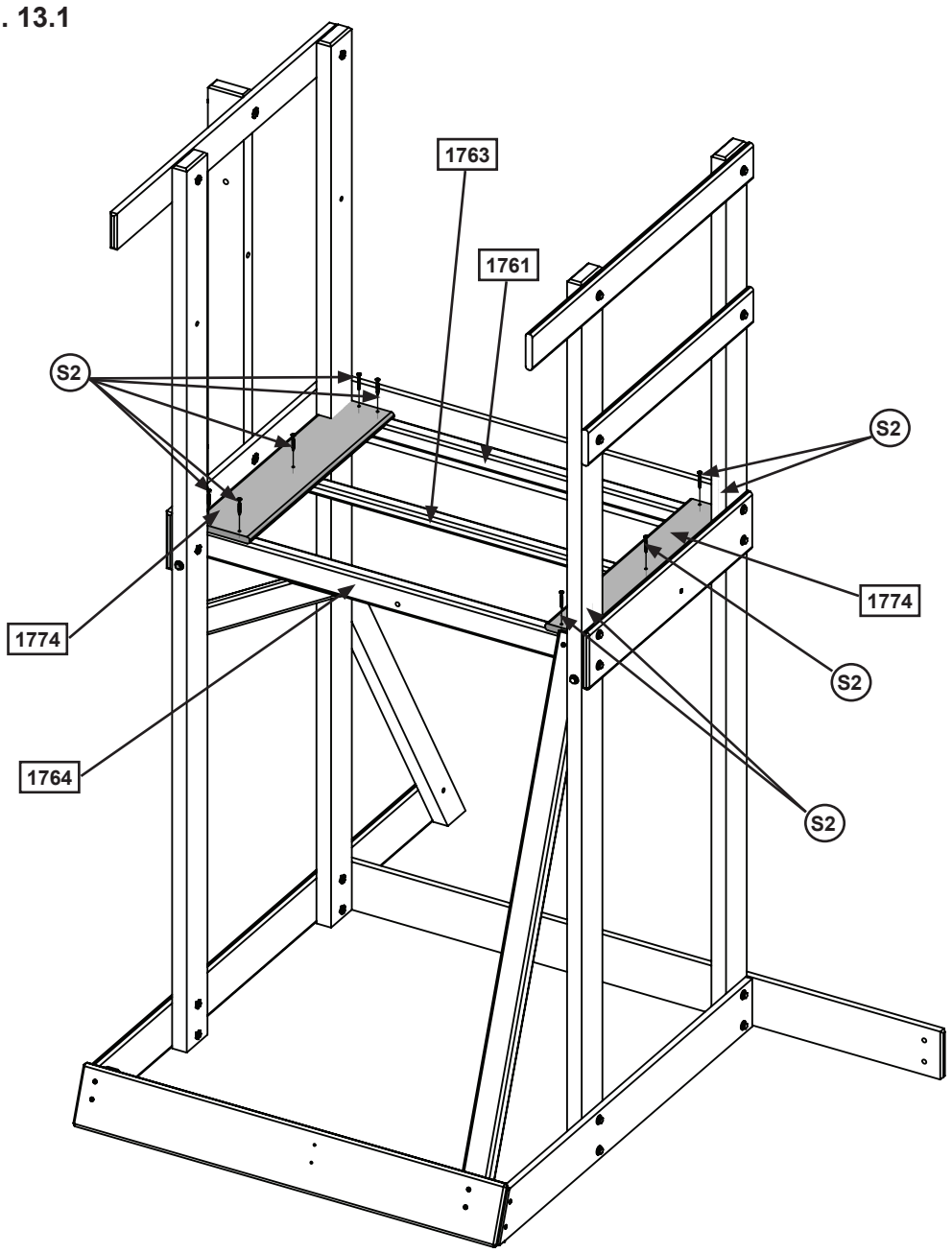

Wood Parts

2 x 1774 CE Gap Board 5/8 x 5-3/8 x 23-1/2”

Hardware

10 x S2 #8 x 1-1/2” Wood Screw

Step 13: Attach Gap Board and Floor Boards to Fort Part 2

B: In between both (1774) CE Gap Boards place 5 (1776) Floor Boards making sure all boards are evenly spaced. Attach to (1761) Side Joist, (1763) Floor Joist and (1764) Floor Front using 5 (S2) #8 x 1-1/2" Wood Screws per board. (fig. 13.2)

Fig. 13.2

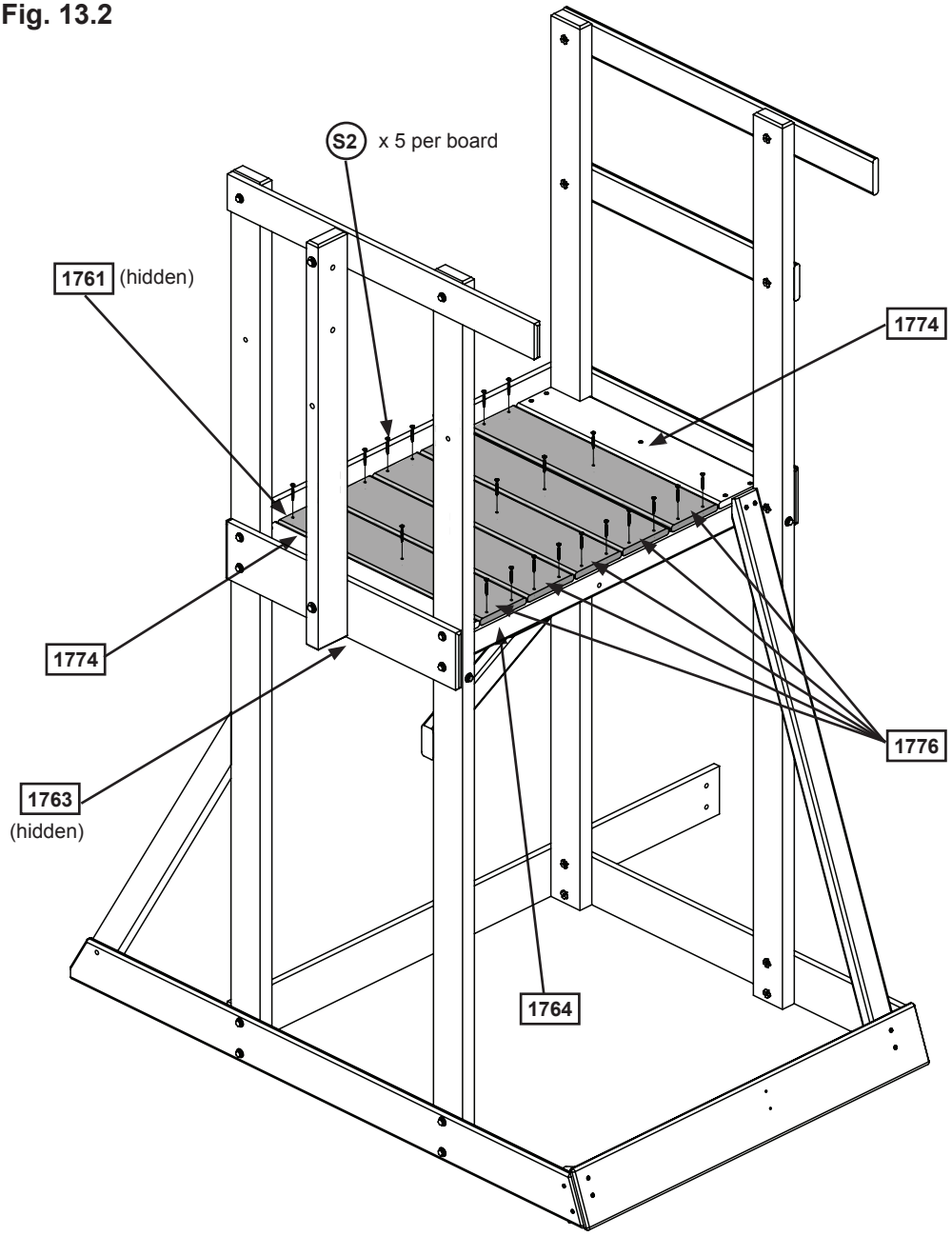

Wood Parts

5 x 1776 **Floor Board 5/8 x 5-3/8 x 23-1/2"**

Hardware

25 x S2 **#8 x 1-1/2" Wood Screw**

Step 14: Front Wall Frame Assembly

A: Attach (1916) Front Divider to (1764) Floor Front with 1 (H6) 1/4 x 4-3/4” Hex Bolt (with lock washer, flat washer and t-nut). **Keep bolt loose.** (fig 14.1)

B: Attach (1980) Top Front Back to (1916) Front Divider with 1 (H4) 1/4 x 4” Hex Bolt (with lock washer, flat washer and t-nut). **Keep bolt loose.** (fig. 14.1)

C: Make sure (1980) Top Front Back is level then attach to both (1500) Posts with 4 (S7) #12 x 2” Pan Screws (with 3/16” flat washer). (fig. 14.1)

D: Tighten all bolts from this step.

Fig. 14.1

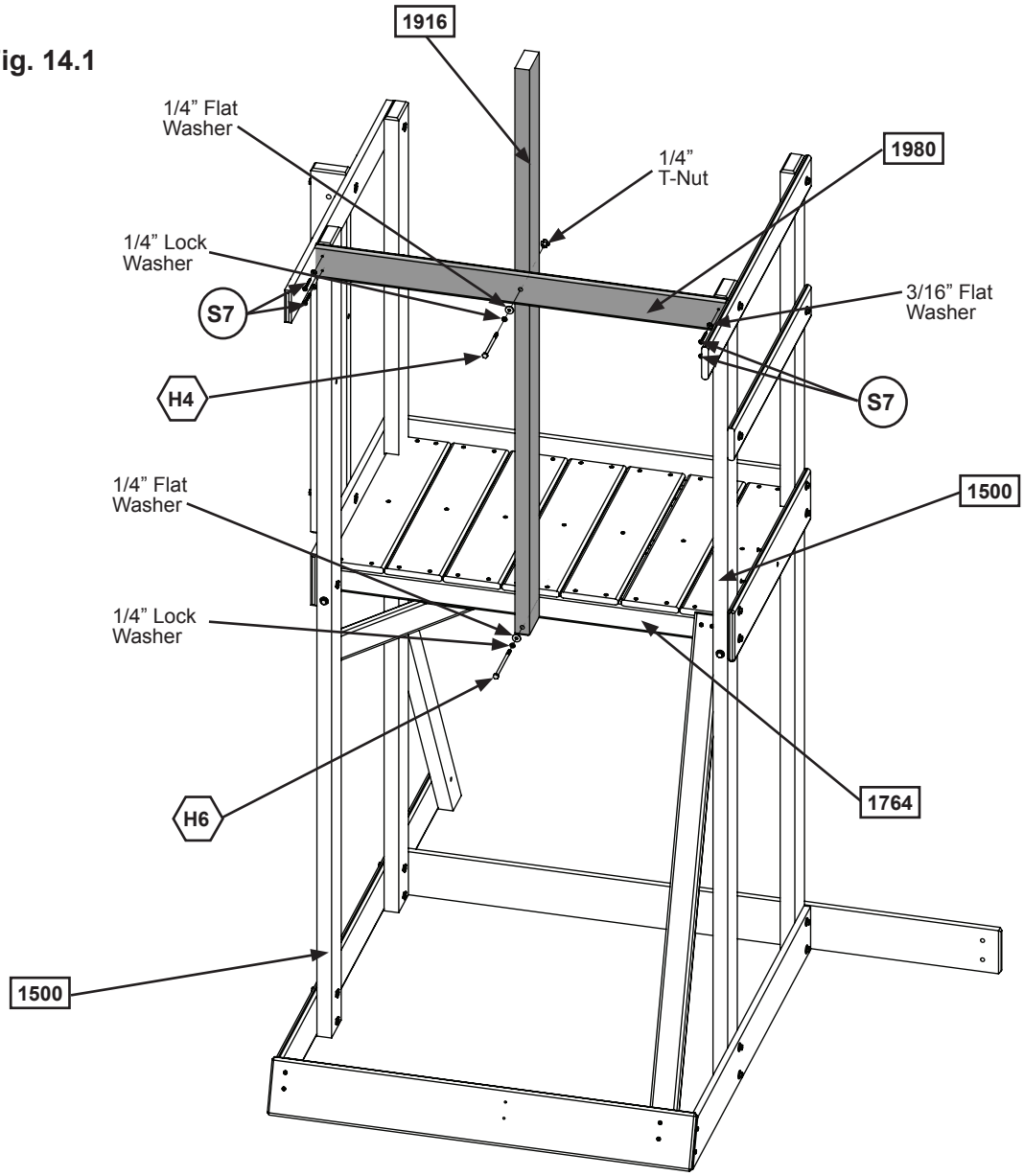

Wood Parts

1 x 1916 **Front Divider 1-3/8 x 3-3/8 x 59-1/4”**

1 x 1980 **Top Front Back 5/8 x 3-3/8 x 38-1/2”**

Hardware

1 x H6 **1/4 x 4-3/4” Hex Bolts (1/4” lock washer, 1/4” flat washer and 1/4” t-nut)**

1 x H4 **1/4 x 4” Hex Bolts (1/4” lock washer, 1/4” flat washer and 1/4” t-nut)**

4 x S7 **#12 x 2” Pan Screws (3/16” flat washer)**

Step 15: Attach Rock Rail to Fort

A: Place (0349) Rock Rail flush to top of the floor boards and tight to (1916) Front Divider. (fig. 15.1). Attach (0349) Rock Rail to (1764) Floor Front using 2 (S15) #8 x 1-3/4” Wood Screws as shown in fig. 15.1.

B: Attach (1767) Lower Front to (0349) Rock Rail with 2 (S2) #8 x 1-1/2” Wood Screws. (fig. 15.1)

Fig. 15.1

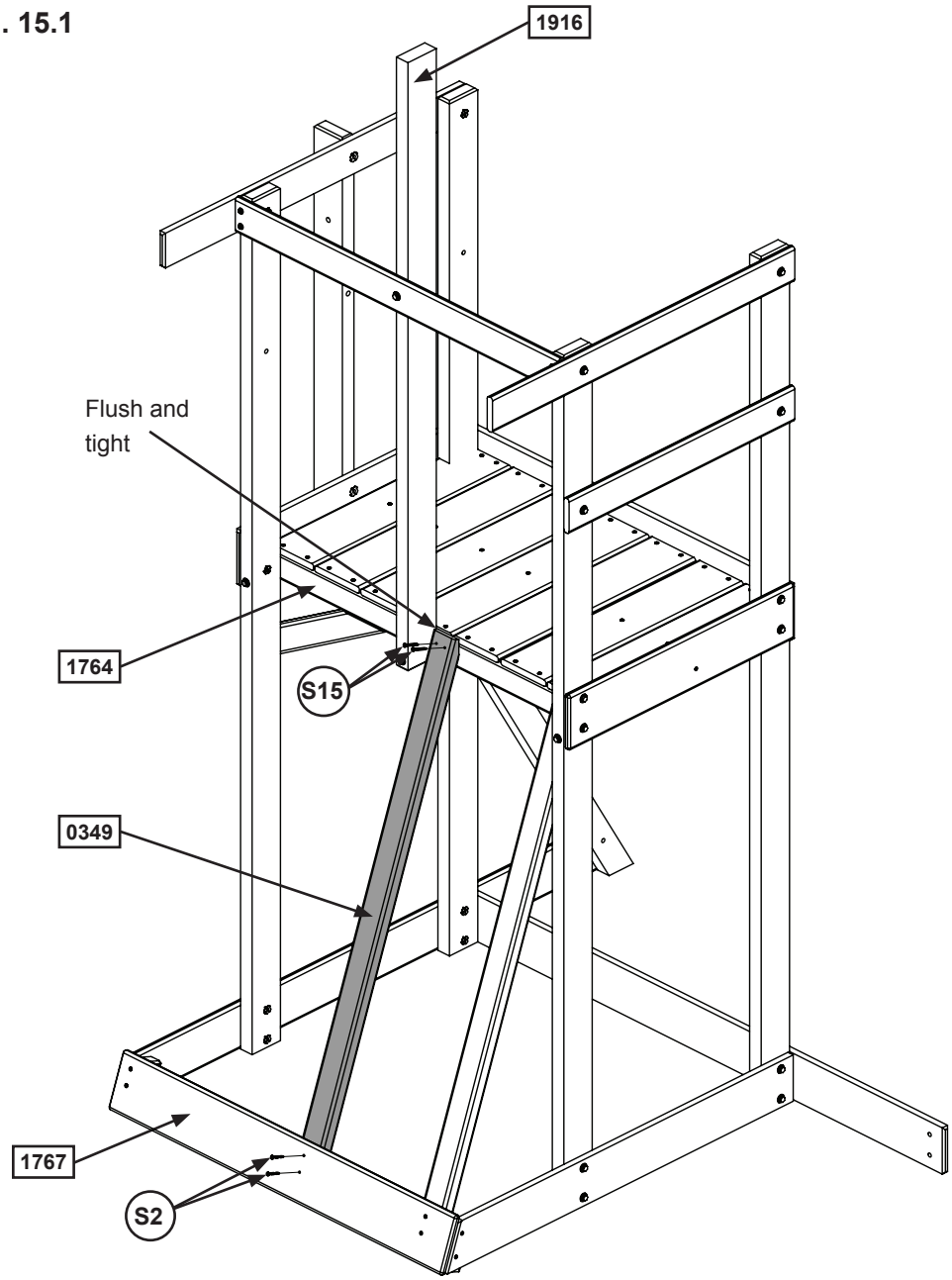

Wood Parts

1 x 0349 **Rock Rail**

Hardware

2 x S15 **#8 x 1-3/4” Wood Screw**

2 x S2 **#8 x 1-1/2” Wood Screw**

Step 16: Rock Wall Assembly

A: Attach (1779) CE Access Board flush to the top and outside edges of each (0349) Rock Rail with 4 (S2) #8 x 1-1/2” Wood Screws. (fig. 16.1 and 16.2)

B: Below (1779) CE Access Board stagger 3 (1777) CE Rock Board B and 2 (1778) CE Rock Board A, making sure they are evenly spaced with a minimum 2-1/8” and maximum 2-3/8” gap. The sides should be to the outside edges of each (0349) Rock Rail. Attach using 4 (S2) #8 x 1-1/2” Wood Screws per board. (fig. 16.1 and 16.2)

Place the CE Rock Boards as you desire, but watch the hole placement to prevent rocks from forming a straight line.

Fig. 16.1

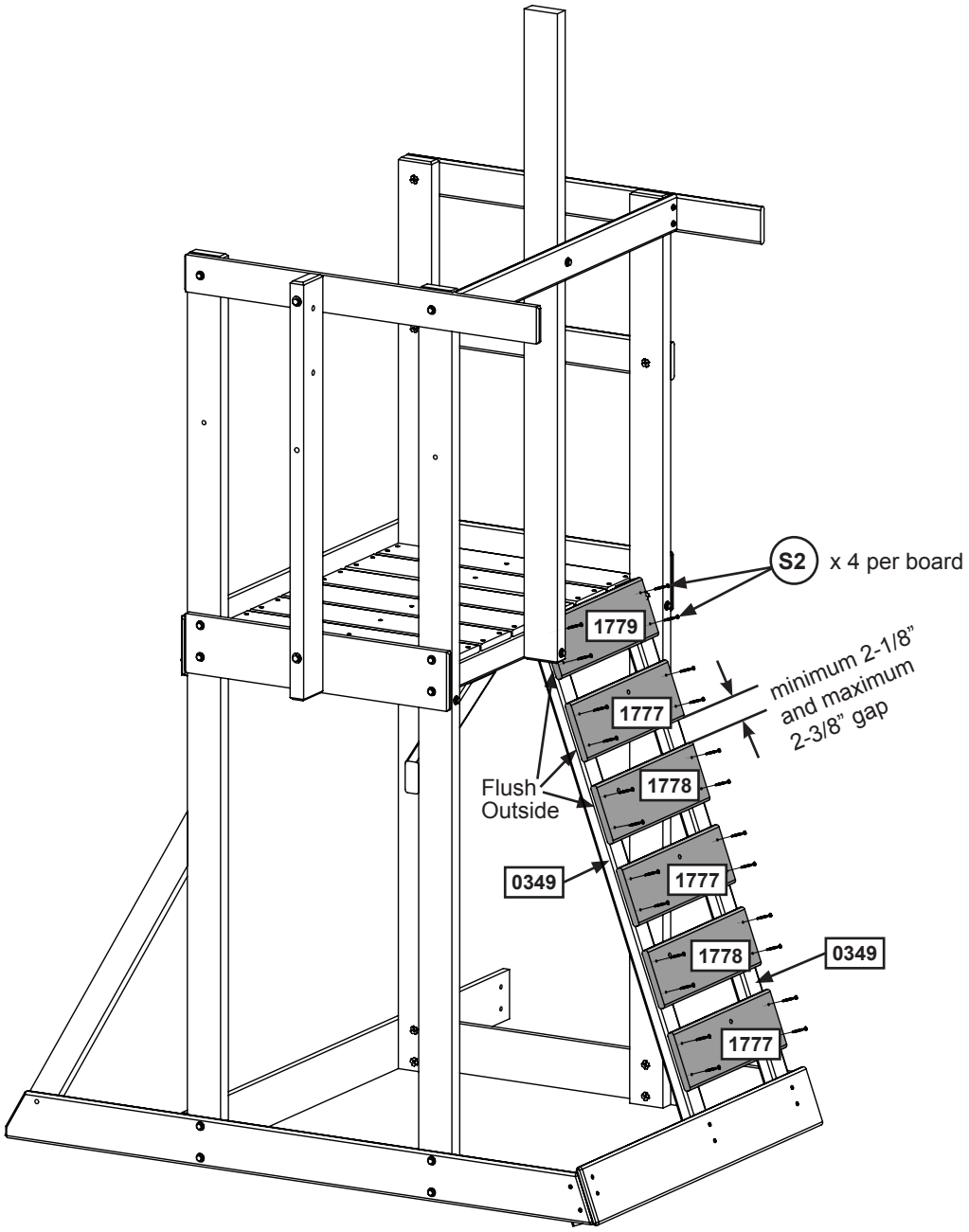

Wood Parts

1 x 1779 **CE Access Board**

2 x 1778 **Rock Board A**

3 x 1777 **Rock Board B**

Hardware

24 x S2 **#8 x 1-1/2” Wood Screw**

Step 17: Attach Rocks to Rock Board

A: Place 1 Rock on each (1777) and (1778) CE Rock Board A & B (fig. 17.1 and 17.2) and attach using 1 (PB2) 1/4 x 1-1/4" Pan Bolt (with lock washer, flat washer and barrel nut) and 1 (S10) #8 x 1" Pan Screw per rock. The rocks can be attached in any order. (fig. 17.1)

The screw must be in the hole directly under the Pan Bolt, it will stop the rock from spinning. (fig. 17.2)

Note: Make sure all hardware is used to secure each rock properly.

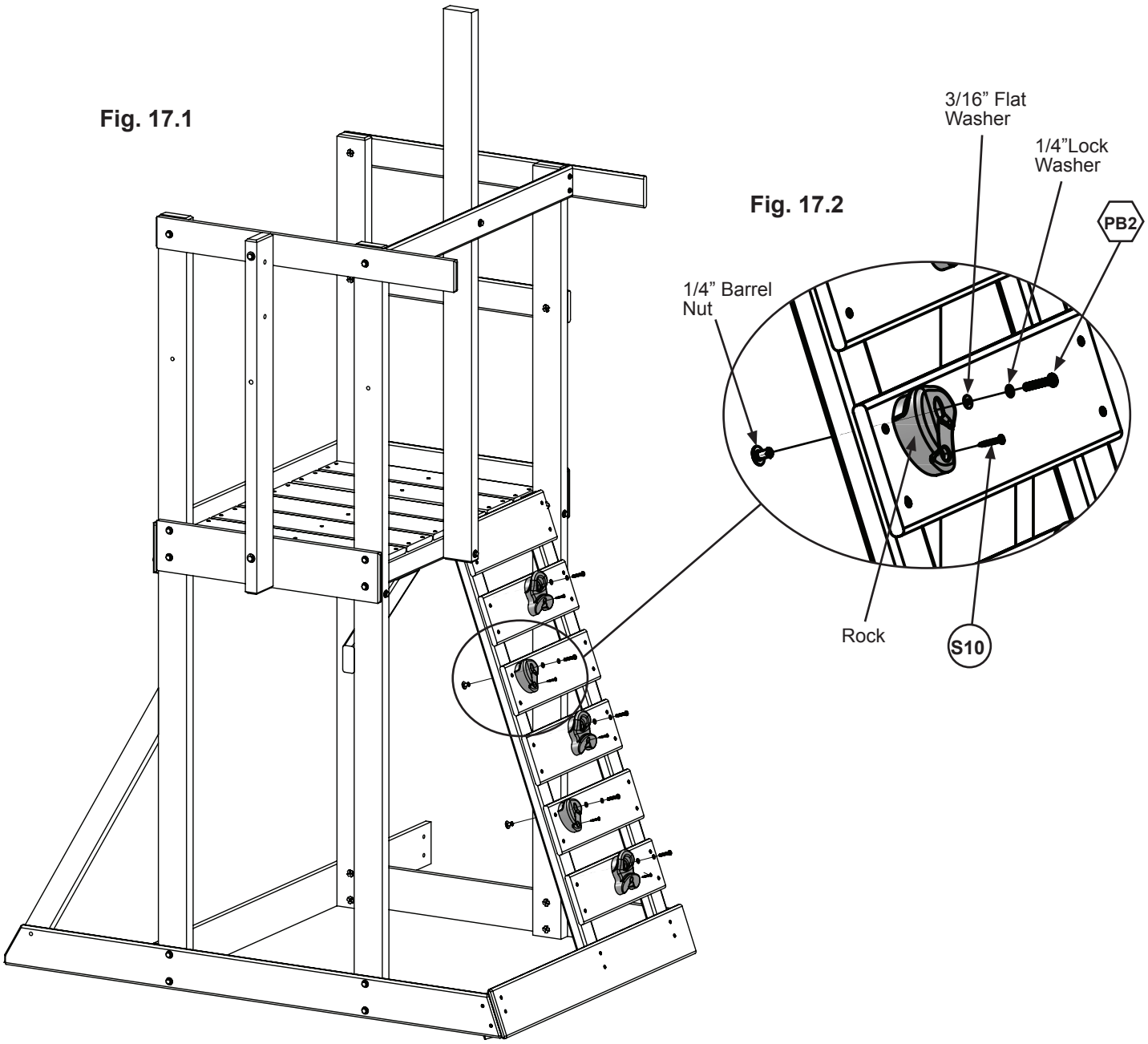

Hardware

5 x PB2 **1/4 x 1-1/4" Pan Bolt (with 1/4" lock washer, 3/16" flat washer, barrel nut)**

5 x S10 **8 x 1" Pan Screw**

Other Parts

5 x Rocks

Step 18: Attach Ground Stakes

MOVE FORT TO FINAL LOCATION. FINAL LOCATION MUST BE LEVEL GROUND

Warning! To prevent tipping and avoid potential injury, stakes must be driven 10-1/2" into ground. Digging or driving stakes can be dangerous if you do not check first for underground wiring, cables or gas lines.

A: Drive 3 (0318) Ground Stakes 10-1/2" into the ground against (1928) Lower Side at (1500) Post and (0369) Lower Diagonal and against (1914) Cafe Ground at (1500) Post as shown in fig. 18.1. Attach using 2 (S3) #8 x 2-1/2" Wood Screws per ground stake. (fig. 18.1 and 18.2)

Fig. 18.1

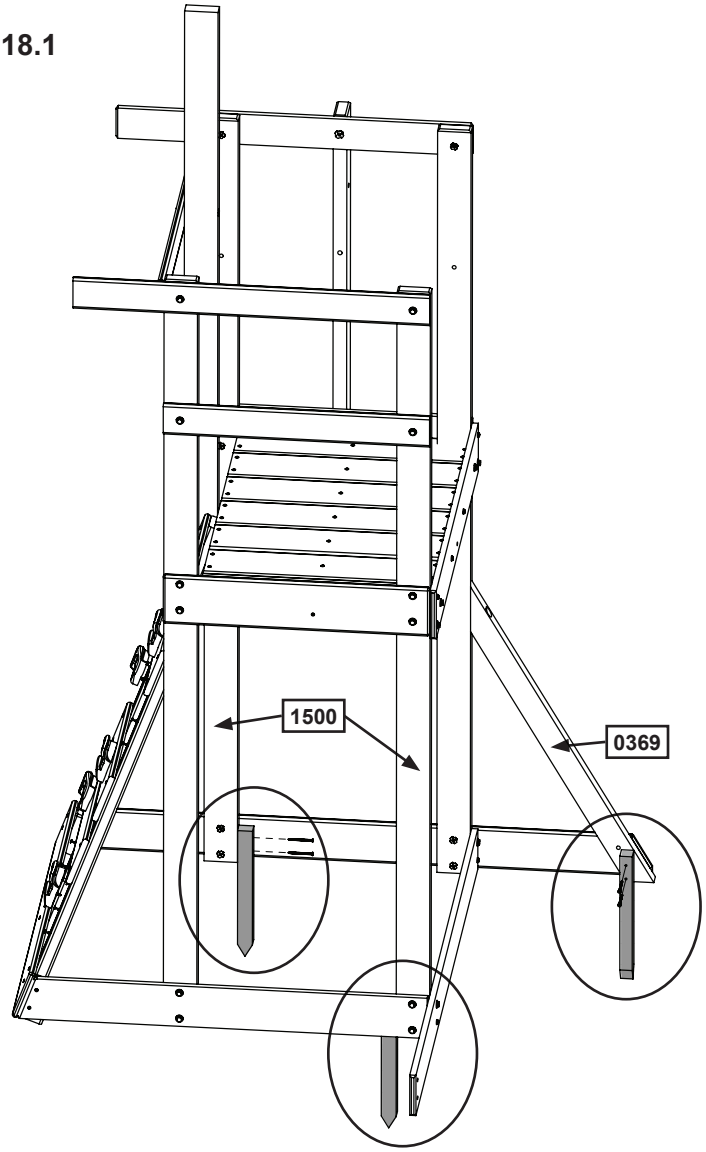

Fig. 18.2

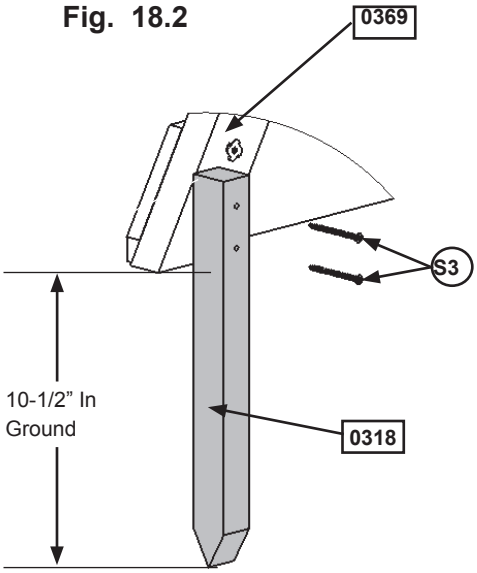

Wood Parts

3 x 0318 Ground Stakes 1-1/4 x 1-1/2 x 14"

Hardware

6 x S3 #8 x 2-1/2" Wood Screw

Step 19: Back Wall Frame Assembly

A: Attach (1912) Back Divider to (1913) Back Floor with 1 (H2) 1/4 x 2” Hex Bolt (with lock washer, flat washer and t-nut). **Keep bolt loose.** (fig 19.1 and 19.2)

B: Attach (1980) Top Front Back to (1912) Back Divider with 1 (H2) 1/4 x 2” Hex Bolt (with lock washer, flat washer and t-nut). **Keep bolt loose.** (fig. 19.1 and 19.2)

C: Make sure (1980) Top Front Back is level then loosely attach to both (1500) Posts with 4 (S7) #12 x 2” Pan Screws (with 3/16” flat washer). **Keep the screws loose.** (fig. 19.1 and 19.2)

Fig. 19.2

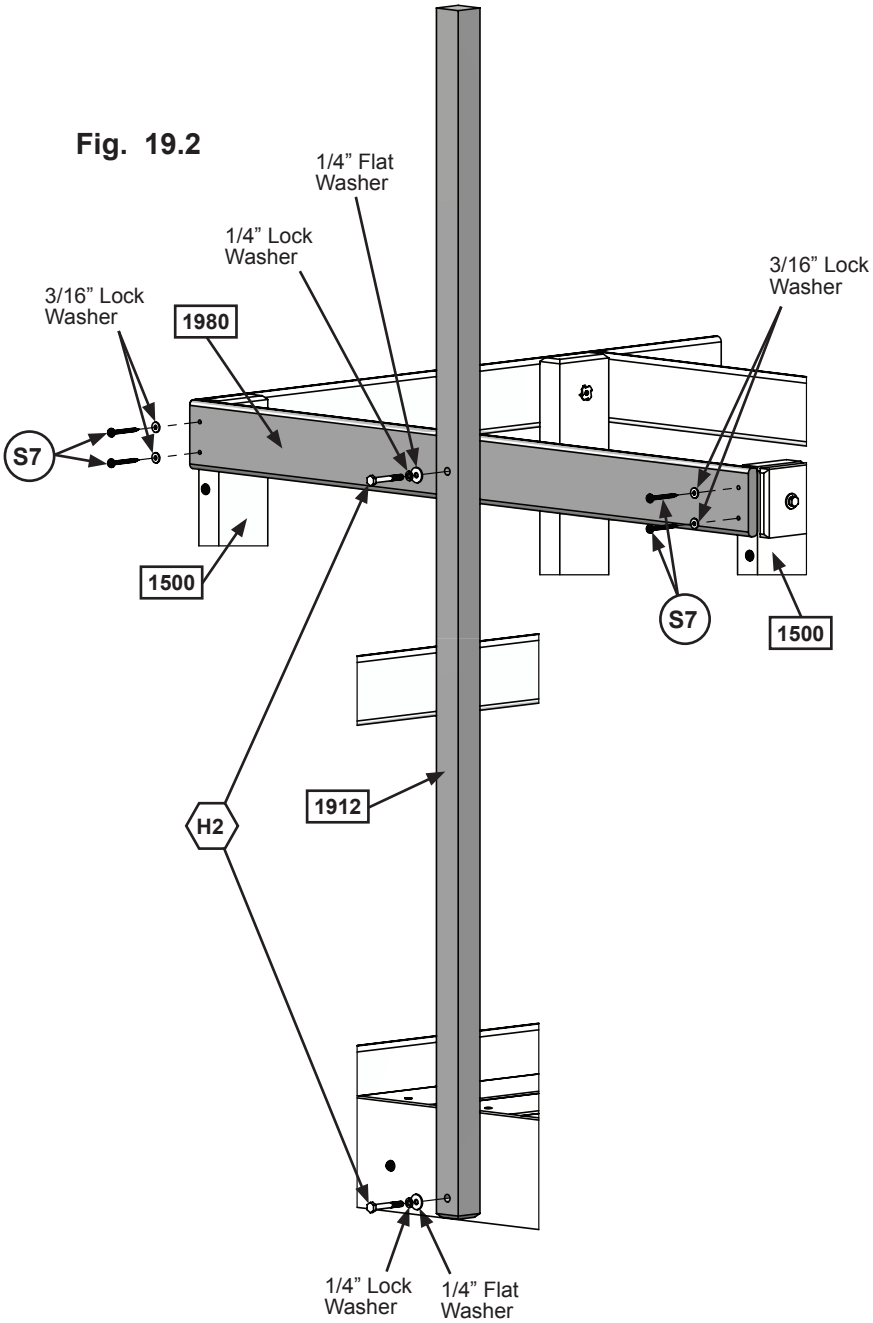

Fig. 19.1

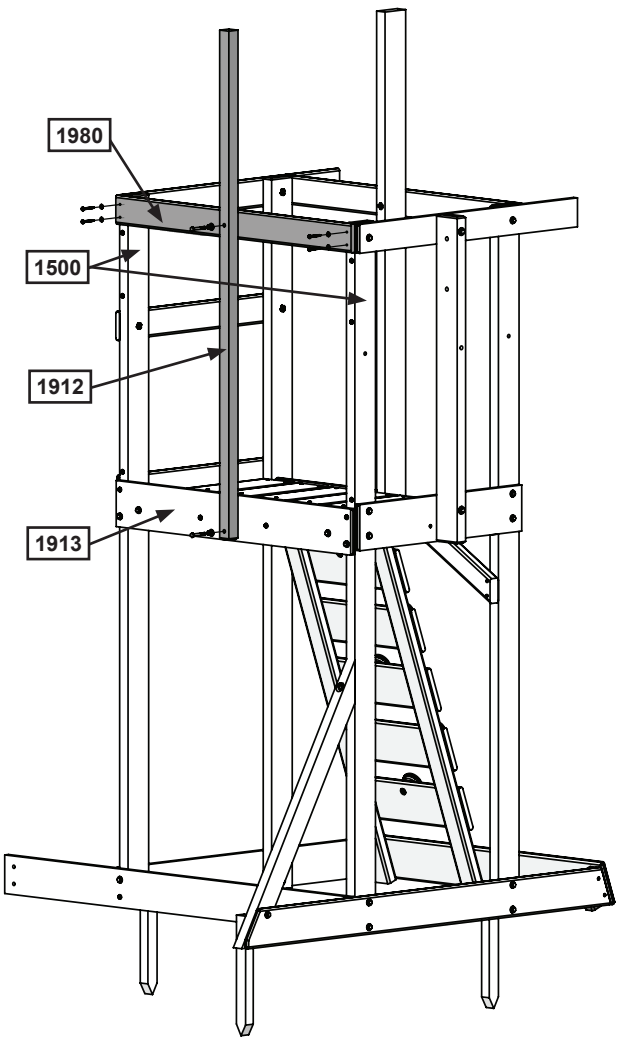

Wood Parts

1 x 1912 **Back Divider 1-1/2 x 1-1/2 x 59-3/8”**

1 x 1980 **Top Front Back 5/8 x 3-3/8 x 38-1/2”**

Hardware

2 x H2 **1/4 x 2” Hex Bolt (1/4” lock washer, 1/4” flat washer, 1/4” t-nut)**

4 x S7 **#12 x 2” Pan Screw (with 3/16” flat washer)**

Step 20: Attach Chalk Wall Tarp to Fort Part 1

A: On the back of the assembly, from the inside, tuck Chalk Wall Tarp between (1980) Top Front Back and both (1500) Posts and between (1913) Back Floor and both (1500) Posts. (fig. 20.1)

B: Make sure Chalk Wall Tarp is smooth and tight. Attach to the outside of each (1500) Post, 1/2” in from the edge of the tarp, with 4 (S5) #8 x 1/2” Pan Screws (with #8 flat washer) per post making sure that the second screw from the top is 8” down as shown in fig. 20.2.

C: Attach Chalk Wall Tarp to (1980) Top Front Back and (1913) Back Floor, from the inside of the assembly and 1/2” in from the edge of the tarp, using 4 (S5) #8 x 1/2” Pan Screws (with #8 flat washer) per board. (fig. 20.2)

D: Tighten the screws in (1980) Top Front Back and the bolts in (1912) Back Divider from Step 19.

Fig. 20.2

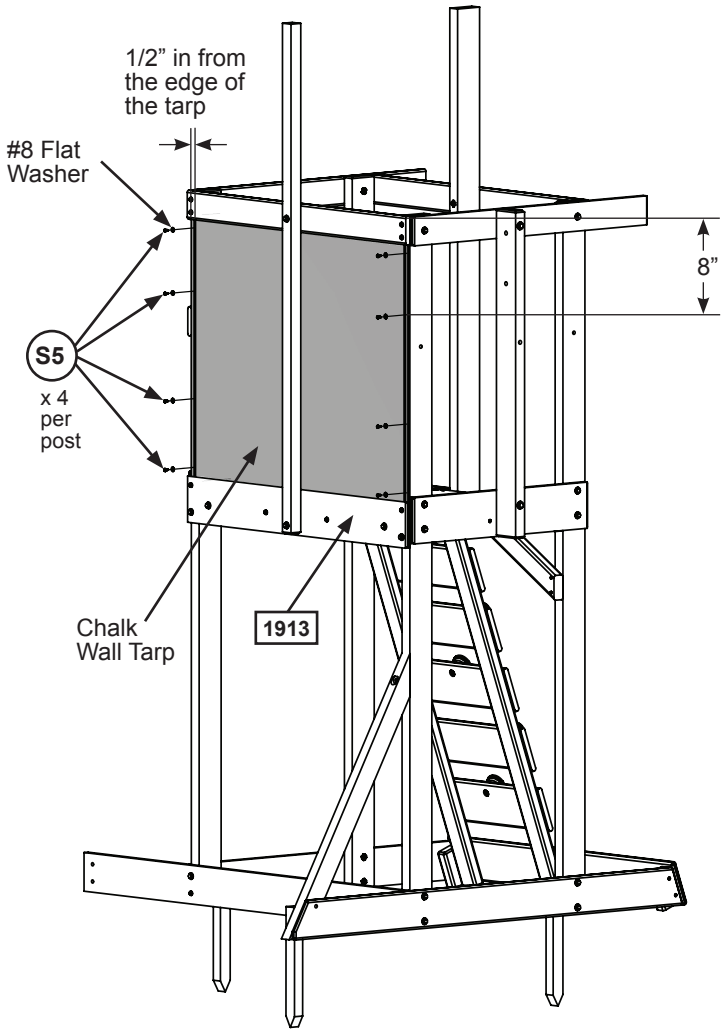

Fig. 20.1

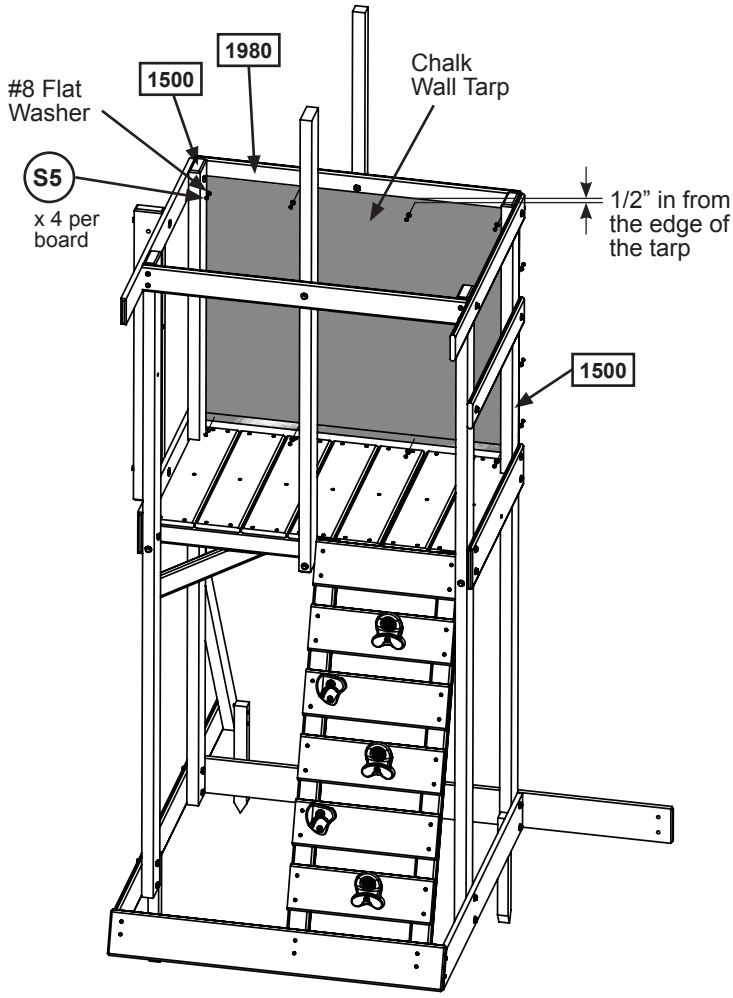

Hardware

16 x (S5) #8 x 1/2” Pan Screw (#8 flat washer)

Other Parts

1 x Chalk Wall Trap

Step 20: Attach Chalk Wall Tarp to Fort Part 2

E: Slide 1 (1990) Chalk Wall Brace in behind (1912) Back Divider so that it lines up with (1923) Side Top. Attach each end of (1990) Chalk Wall Brace to the (1500) Posts from the outside using 2 (S7) #12 x 2” Pan Screws (with 3/16” flat washer) per side. (fig. 20.3 and 20.4)

F: From inside the fort feel for the pre-drilled hole in the center of (1990) Chalk Wall Brace and install 1 (S7) #12 x 2” Pan Screw (with 3/16” flat washer). (fig. 20.5 and 20.6)

Fig. 20.3

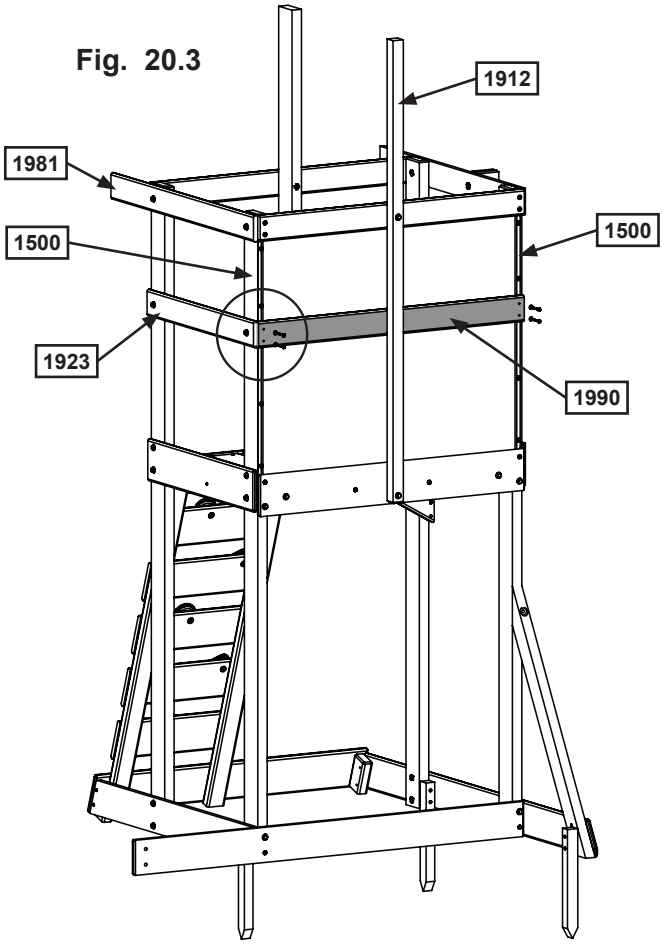

Fig. 20.5
Inside View

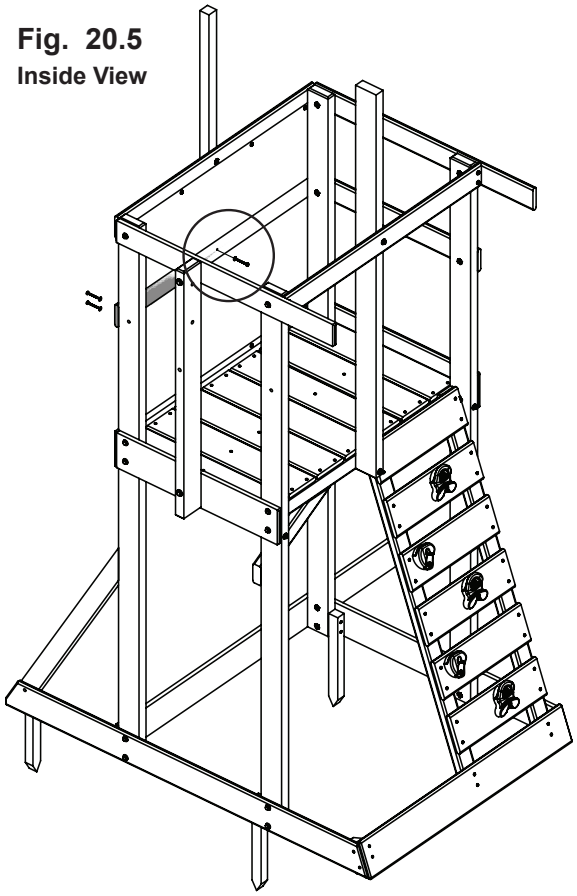

Fig. 20.4

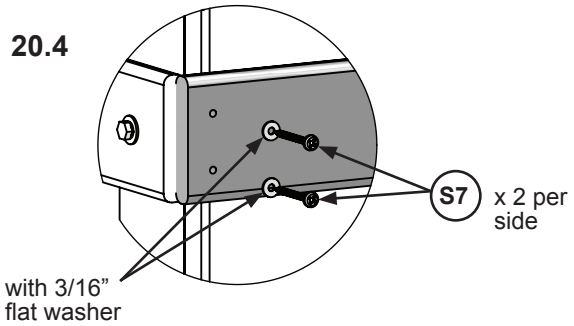

Fig. 20.6

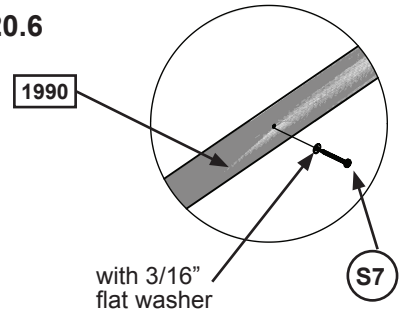

Wood Parts

1 x 1990 Chalk Wall Brace 5/8 x 1-3/8 x 38-1/2”

Hardware

5 x S7 #12 x 2” Pan Screw (with 3/16” flat washer)

Step 20: Attach Chalk Wall Tarp to Fort Part 3

G: From inside the fort, feel for the (1912) Back Divider and find a center point between the floor and the (1990) Chalk Wall Brace. Install 1 (S5) #8 x 1/2" Pan Screw (with #8 flat washer) to secure the Chalk Wall to (1912) Back Divider. (Fig. 20.7 & 20.8)

Fig. 20.7

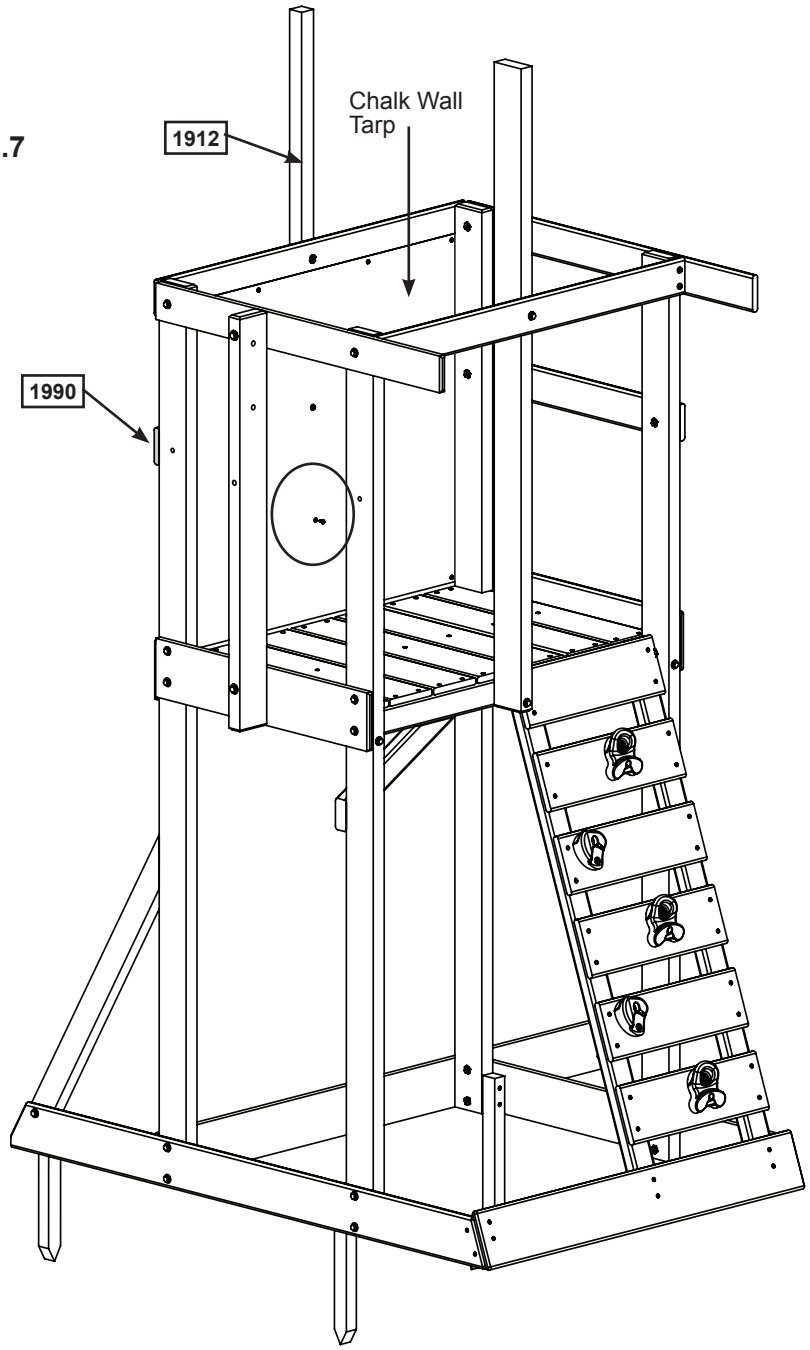

Fig. 20.8

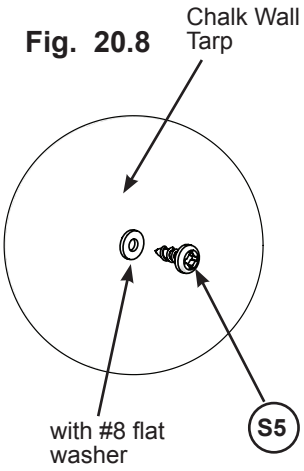

Hardware

1 x (S5) #8 x 1/2" Pan Screw (with #8 flat washer)

Step 21: Swing Side Wall Assembly

A: From inside the fort in between both (1500) Posts on Swing Wall side, measure 3/4” up from (1774) CE Gap Board and attach 2 (0304) CE Floor Boards to (1924) SW Floor and (1925) SW Top using 4 (S1) #8 x 1-1/8” Wood Screws per board. (fig. 21.1) The distance between (1500) Posts and (0304) CE Floor Boards should not to exceed 3”. See fig. 21.2 for proper spacing.

Fig. 21.1

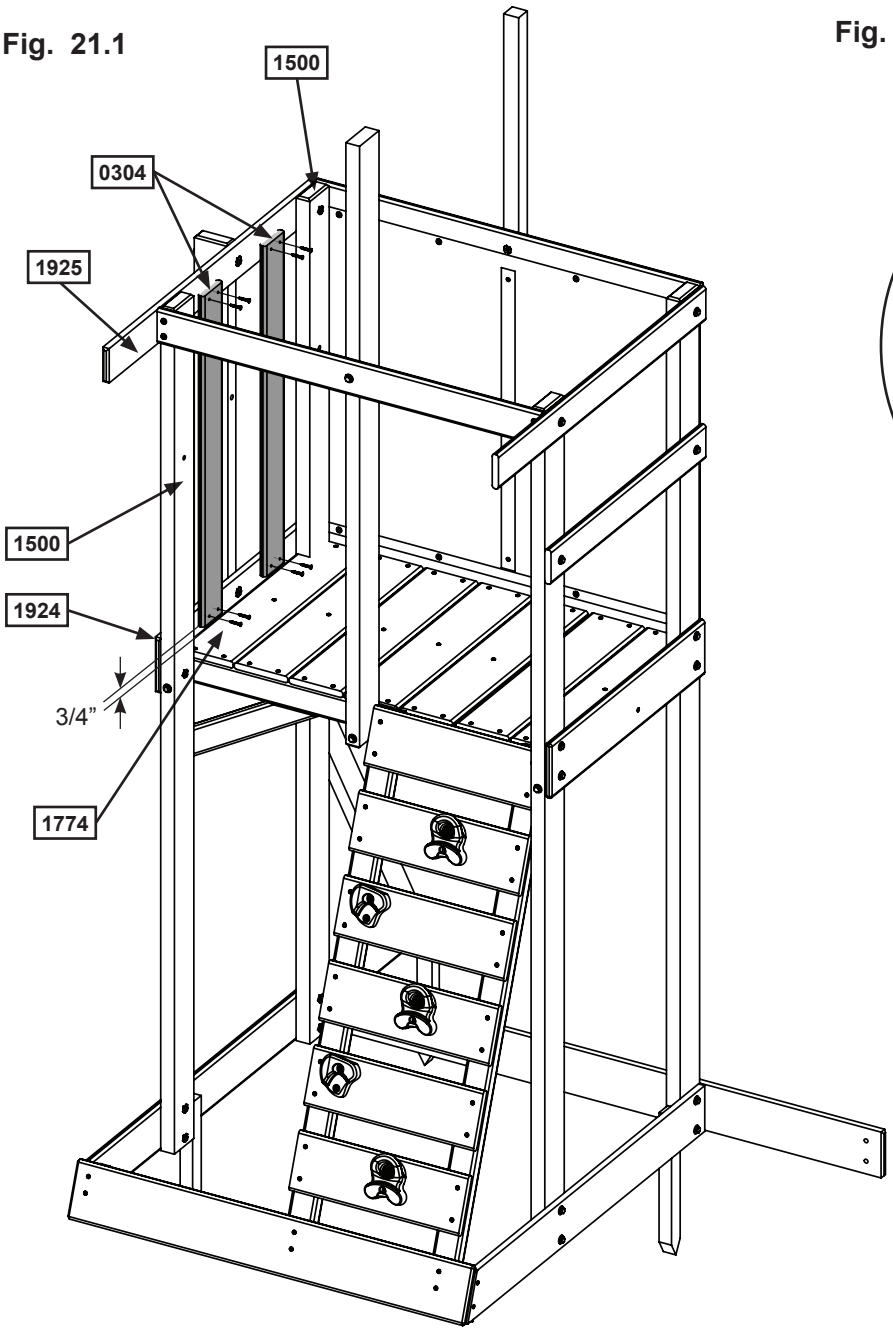

Fig. 21.2

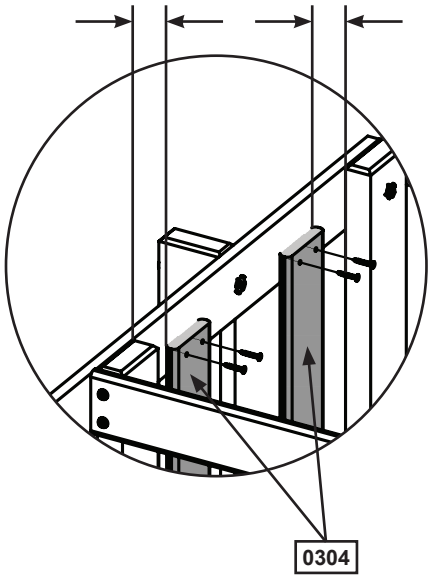

Wood Parts

2 x 0304 CE Floor Board 5/8 x 3-3/8 x 32-1/2”

Hardware

8 x S1 #8 x 1-1/8” Wood Screw

Step 22: Café Wall Assembly Part 1

A: : From outside the Fort on the Cafe Wall, loosen the hex bolts on the (1923) Side Top and (1981) Top Side. Tuck Mesh in behind the board and re-tighten. (Fig. 22.2)

B: Make sure that Mesh is centered and pulled tight, attach Mesh to each (1500) Post from the outside using 3 (S5) #8 x 1/2" Pan Screws (with #8 flat washer) per side. (Fig. 22.3)

C: From inside the fort attach Mesh to (1923) Top Side and (1981) Top Side using 3 (S5) #8 x 1/2" Pan Screws (with #8 flat washer) per side. (Fig. 22.1)

Fig. 22.1
Inside View

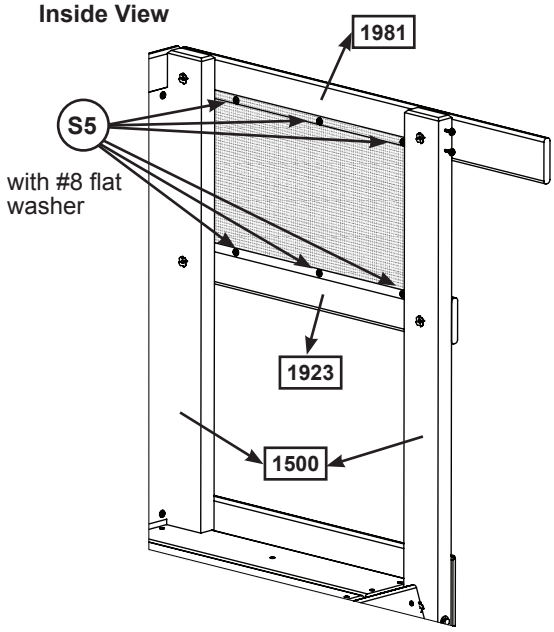

Fig. 22.2
Outside View

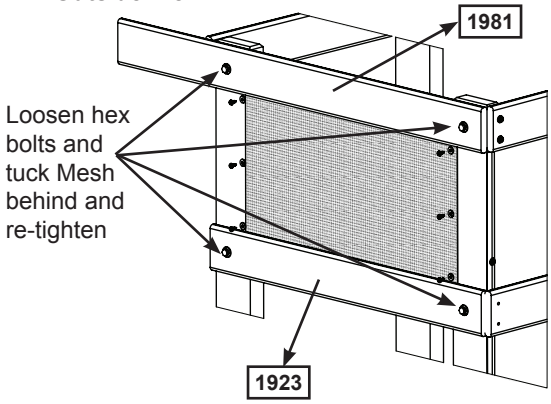

Fig. 22.3

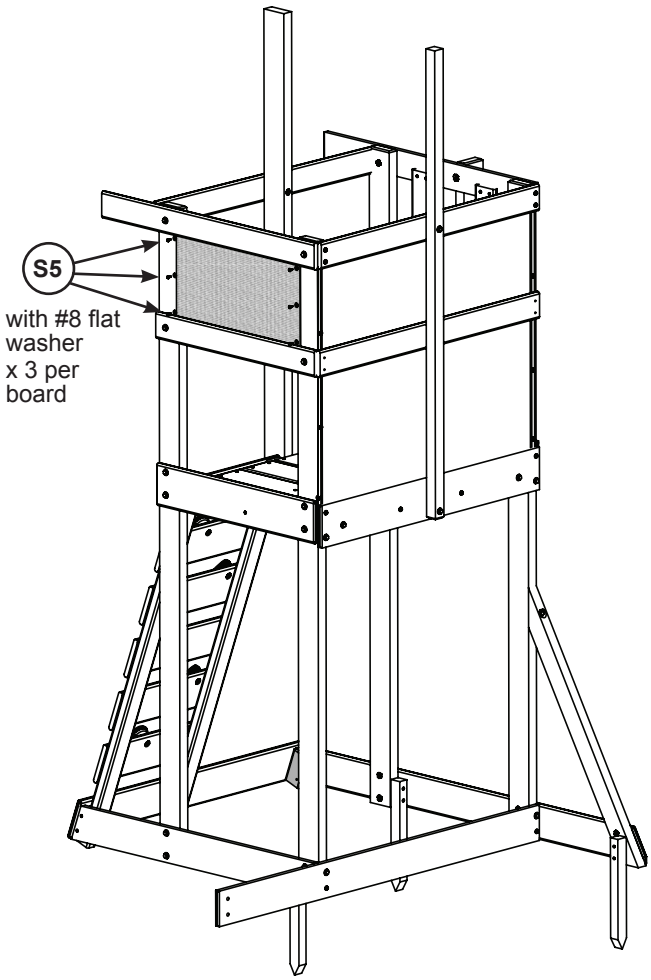

Hardware

12 x (S5) #8 x 1/2" Pan Screw (with #8 flat washer)

Other Parts

1 x Window Mesh

Step 22: Café Wall Assembly Part 2

A: From inside the fort, in between both (1500) Posts on Cafe Wall side, measure 3/4” up from (1774) CE Gap Board and attach 3 (1982) Boards to (1760) Floor and (1923) Side Top making sure that the beveled edges are at the top at shown in fig. 22.5. Attach using 4 (S1) #8 Wood Screws per board. The boards should be evenly spaced, not exceeding 2-3/4”. (fig. 22.4 and 22.5)

Fig. 22.5

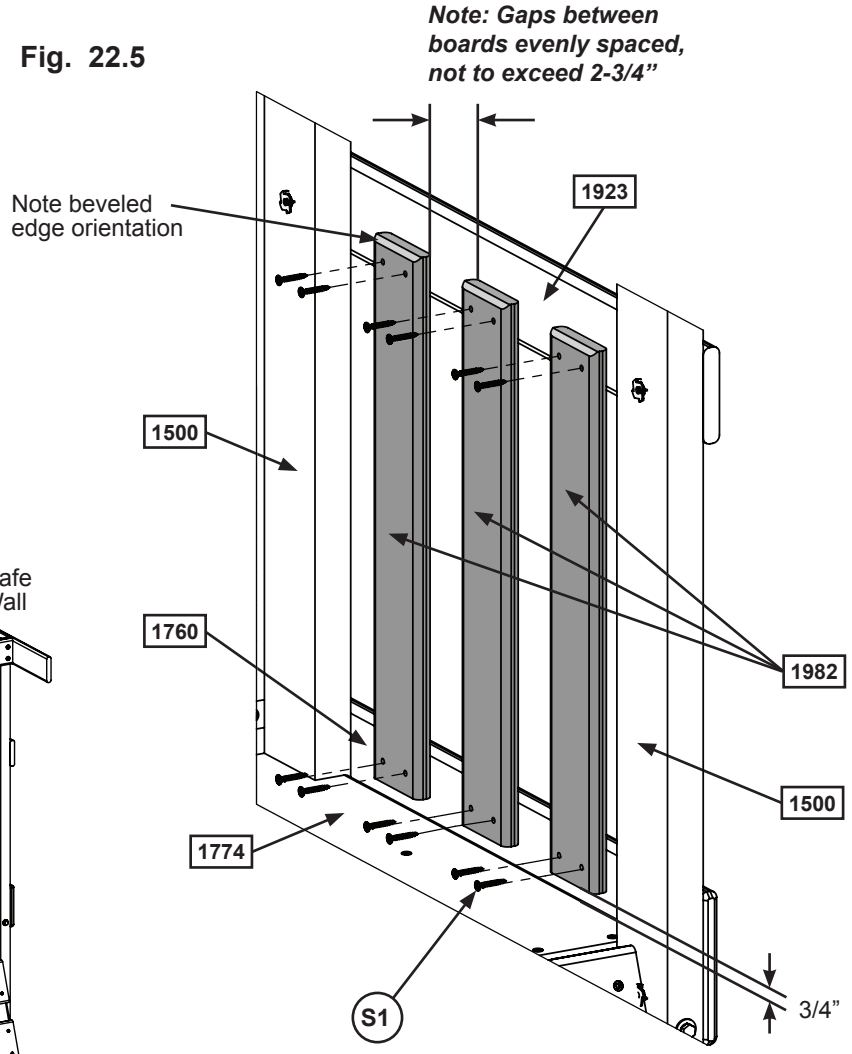

Fig. 22.4

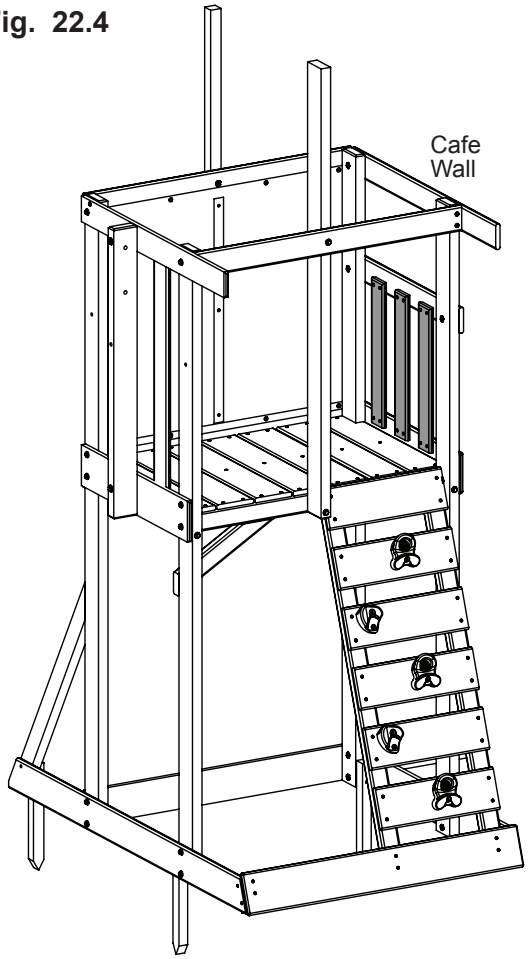

Wood Parts

3 x 1982 **Wall Board 5/8 x 3 x 19”**

Hardware

12 x S1 **#8 x 1-1/8” Wood Screw**

Step 23: Café Frame Assembly Part 1

A: Connect both sections of the café frame together using 2 (MB1) #12 x ½" Machine Bolts (with #12 lock nut). (fig. 23.1 and 23.2)

Fig. 23.1

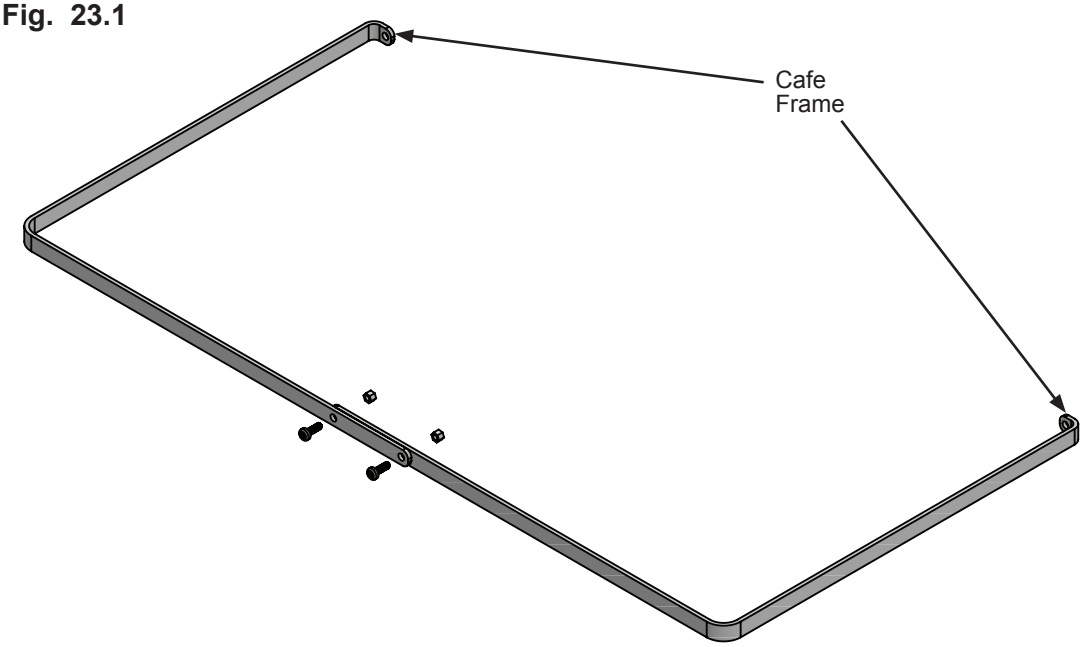

Fig. 23.2

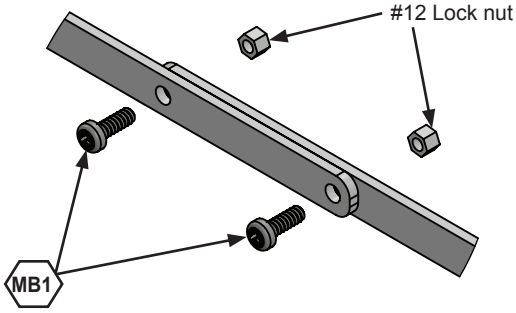

Hardware

2 x MB1 **#12 x 1/2" Machine Bolt (with #12 lock nut)**

Other Parts

2 x Café Frame

Step 23: Café Frame Assembly Part 2

B: Feed Café Frame through the pocket in the bottom of the Café Canopy as shown in fig. 23.3.

Fig. 23.3

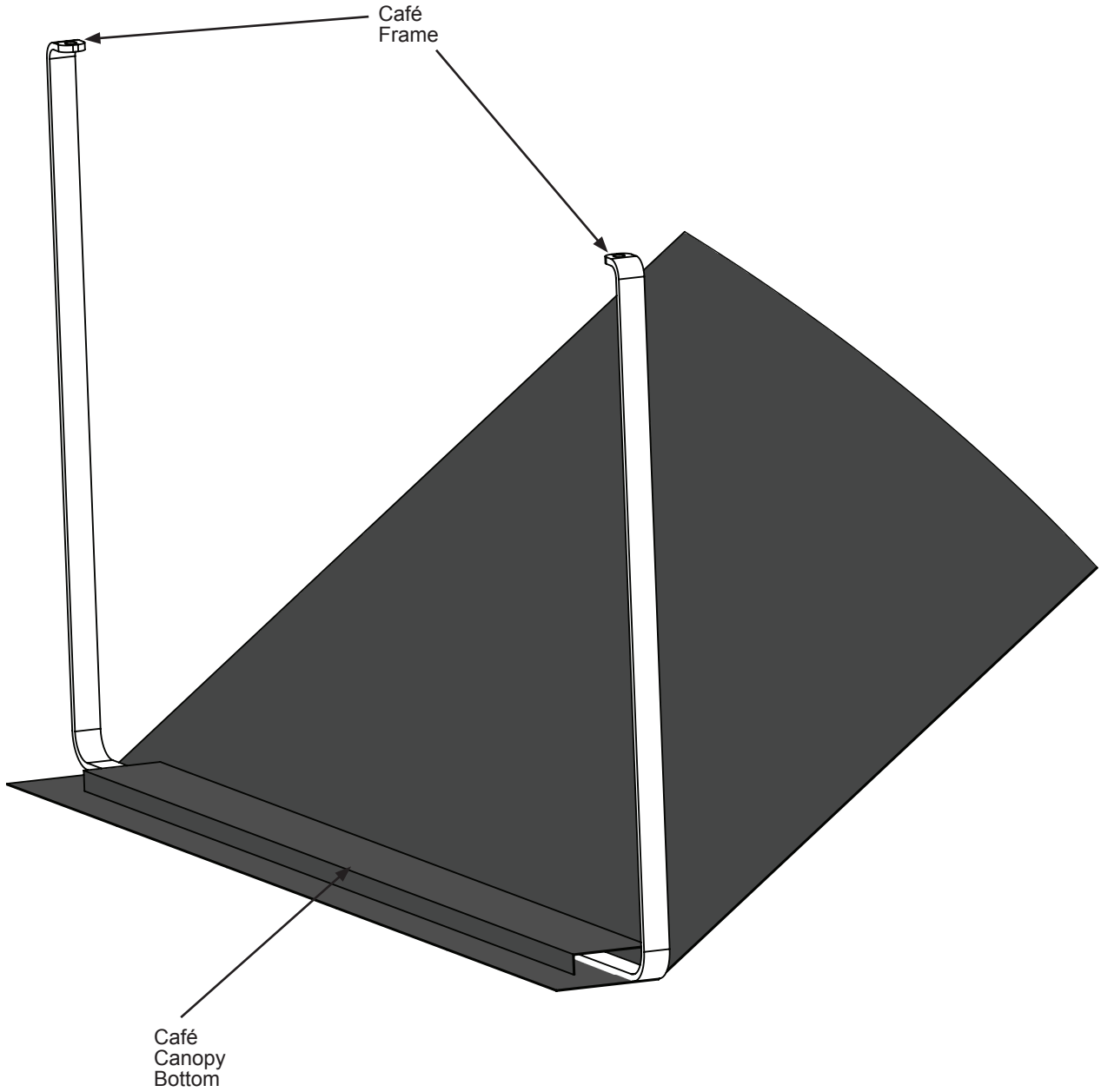

Other Parts

1 x Café Canopy

Step 23: Café Frame Assembly Part 3

C: With a helper hold the canopy against the fort, centred on the (1923) Side Top, just below the previously installed bolts. Make sure the Café Canopy is smooth and tight, then attach to (1923) with 5 (S5) #8 x 1/2” Pan screws with washers. It is important to ensure that Café Canopy is level and even. (fig. 23.4)

D: Hold the Canopy Frame against the (1760) Floor and attach with 1 (S10) #8 x 1” Pan screw per side on the outside of the top bolts. (fig. 23.5 and 23.6)

Fig. 23.4

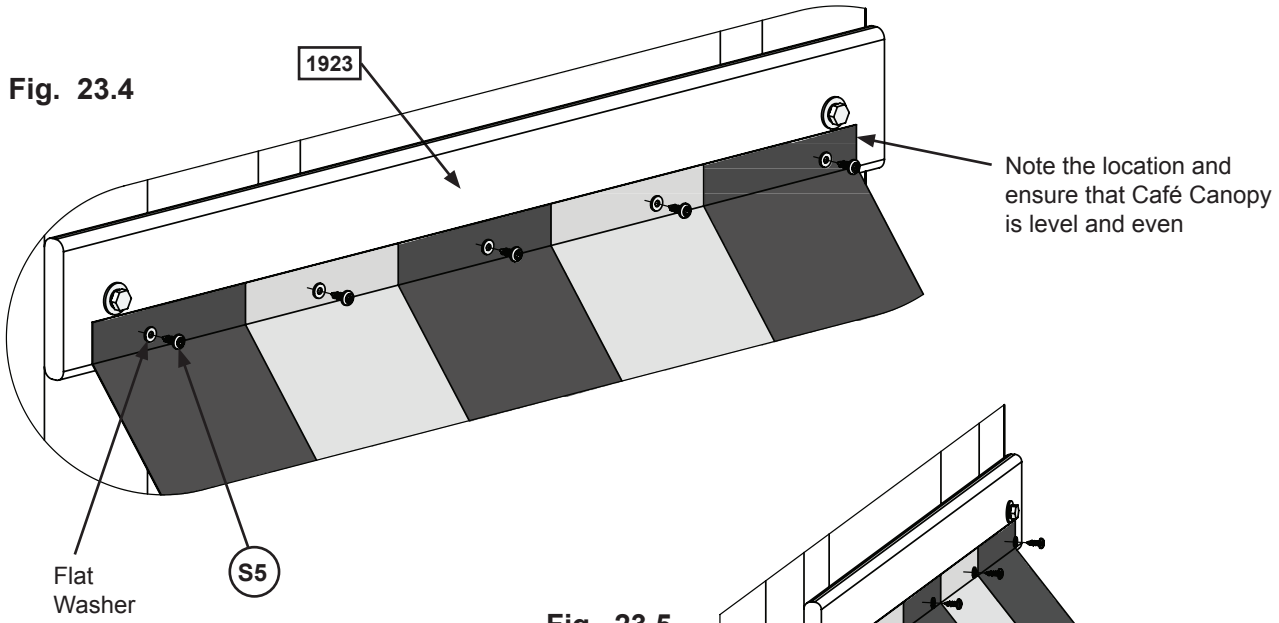

Fig. 23.5

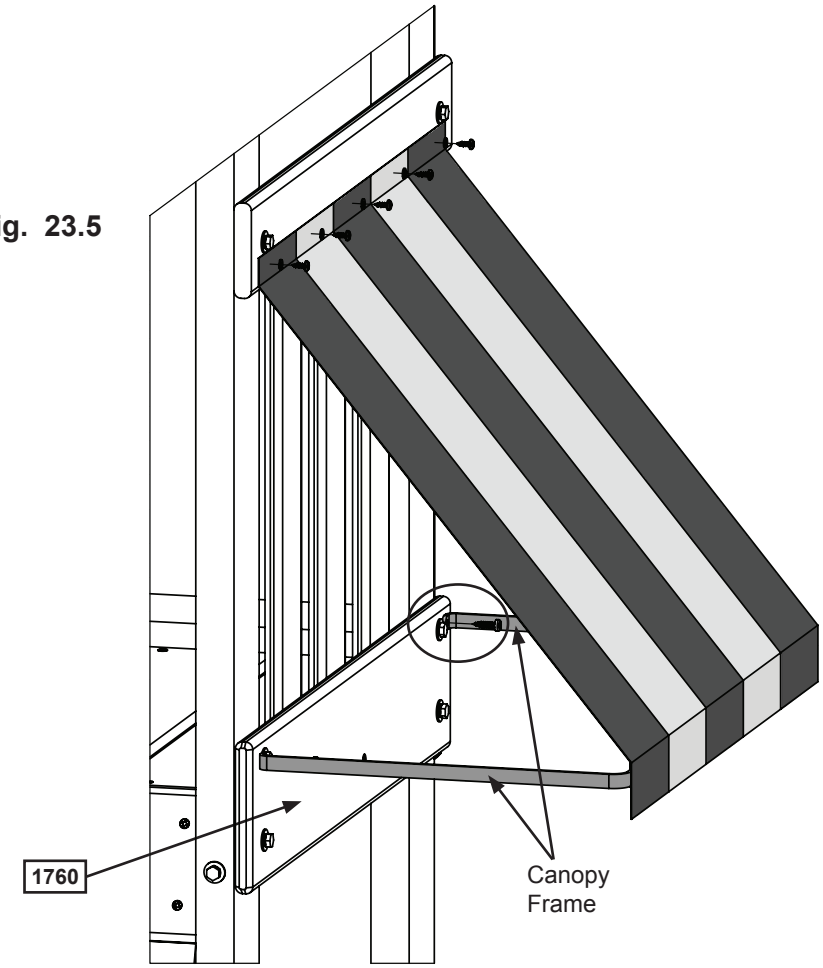

Fig. 23.6

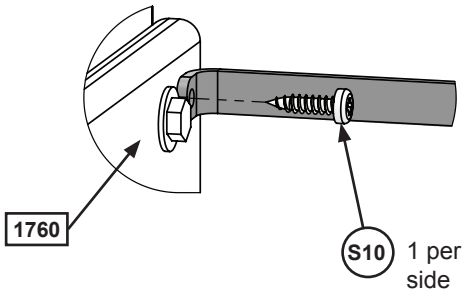

Hardware

5 x (S5) Pan Screw (with #8 flat washer)

2 x (S10) #8 x 1” Pan Screw

Step 24: Attach Hand Grips

A: Measure 6” from the top of (1764) Floor Front in 2 places shown below, pre-drill with a 1/8” drill bit then attach 2 Hand Grips with 2 (LS1) 1/4 x 1-1/2” Lag Screws (with flat washer) per Hand Grip. (fig. 24.1 and 24.2)

Fig. 24.2

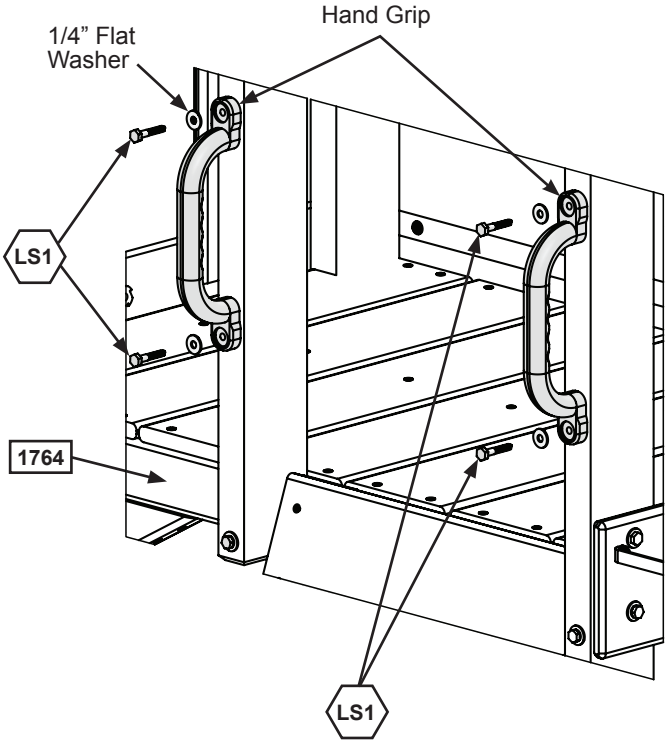

Fig. 24.1

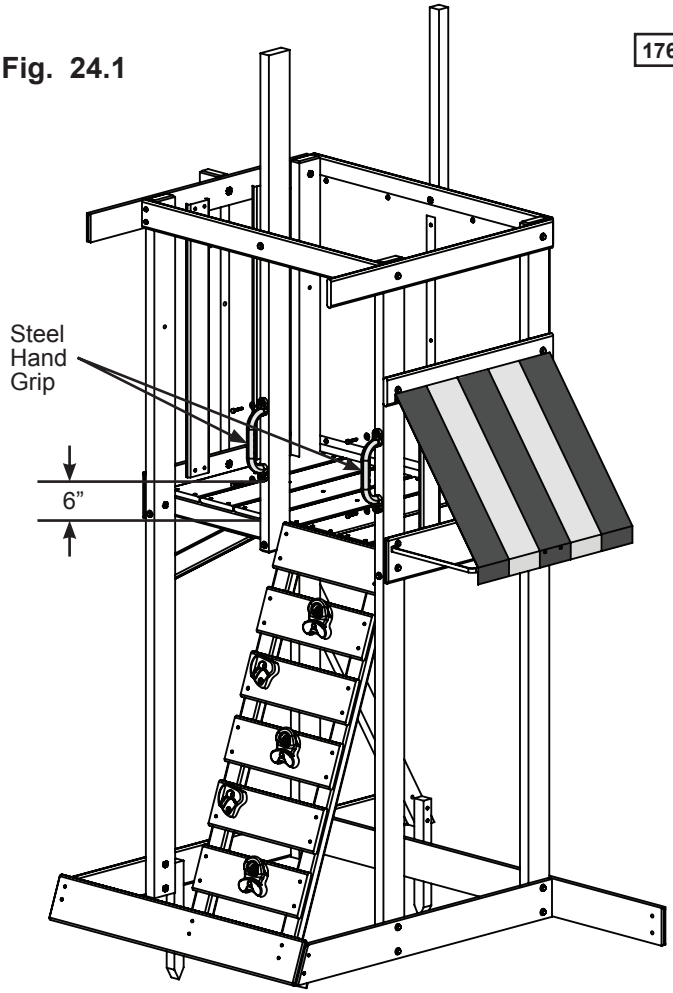

Hardware	Other Parts
4 x LS1 1/4” x 1-1/2” Lag Screw (with flat washer)	2 x Hand Grip

Step 25: Roof Frame Assembly

A: Attach (1919) Roof Ridge flush to the end of (1912) Back Divider with 1 (S4) #8 x 3” Wood Screw and to (1916) Front Divider with 2 (S4) #8 x 3” Wood Screws as shown in fig. 25.1, 25.2 and 25.3

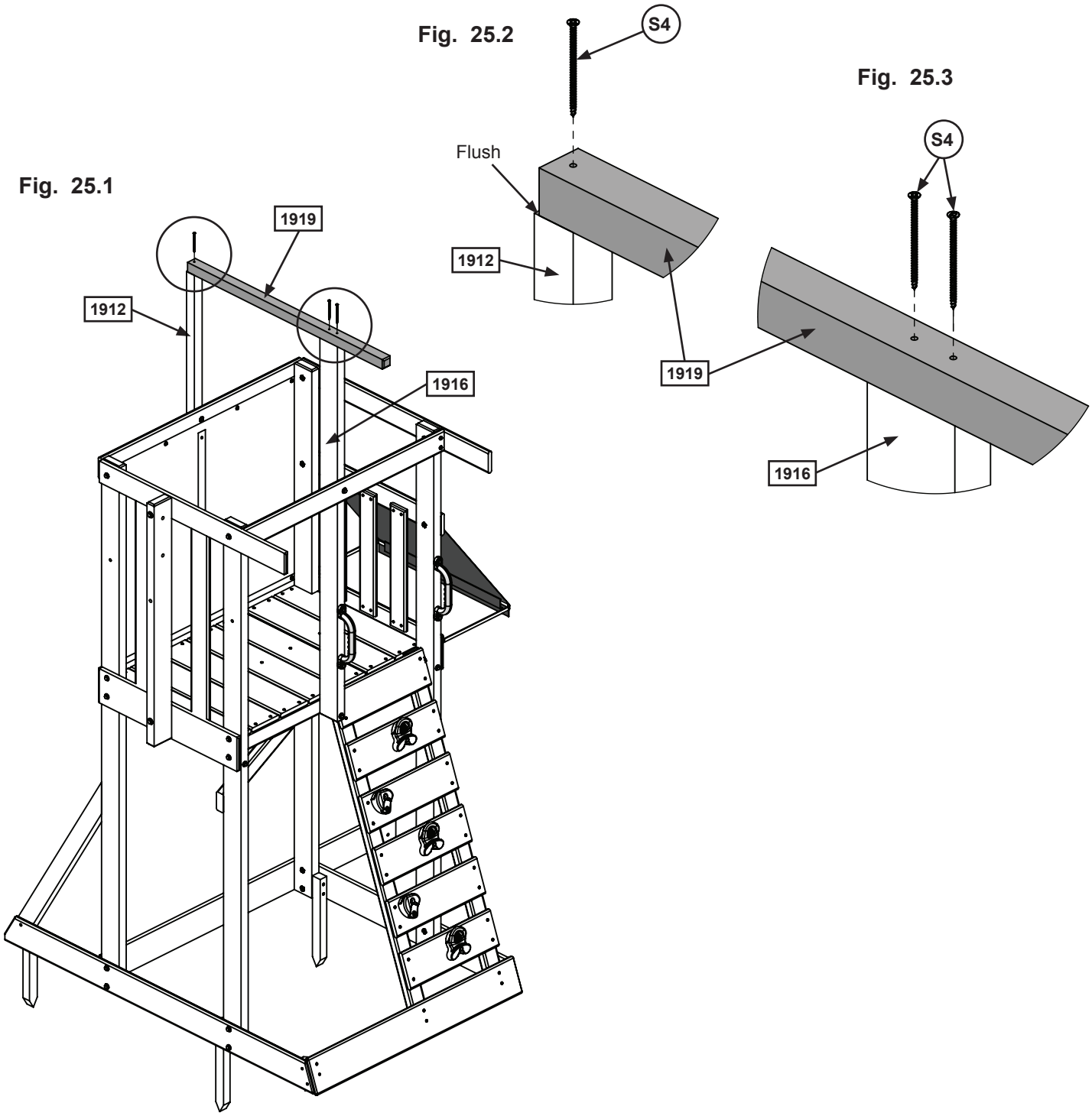

Wood Parts

1 x 1919 **Roof Ridge 1-1/2 x 1-1/2 x 37-7/8”**

Hardware

3 x S4 **#8 x 3” Wood Screw**

Step 26: Attach Newport Main Canopy

A: Place Newport Main Canopy over (1919) Roof Ridge making sure bottom edges of tarp are even on both sides of assembly. (fig. 26.1)

B: Secure one side by attaching canopy to (1925) SW Top using 5 evenly spaced (S5) #8 x 1/2” Pan Screws (with #8 flat washer). Make sure the screws are 1/2” in from the edge of the canopy. (fig 26.1)

C: Make sure the canopy is smooth and tight then secure opposite end of canopy to (1981) Top Side using 5 evenly spaced (S5) #8 x 1/2” Pan Screws (with #8 flat washer). Make sure the screws are 1/2” in from the edge of the canopy. (fig. 26.1)

D: Attach canopy to (1919) Roof Ridge with 4 evenly spaced (S5) #8 x 1/2” Pan Screws (with #8 flat washer). (fig. 26.1)

Fig. 26.1

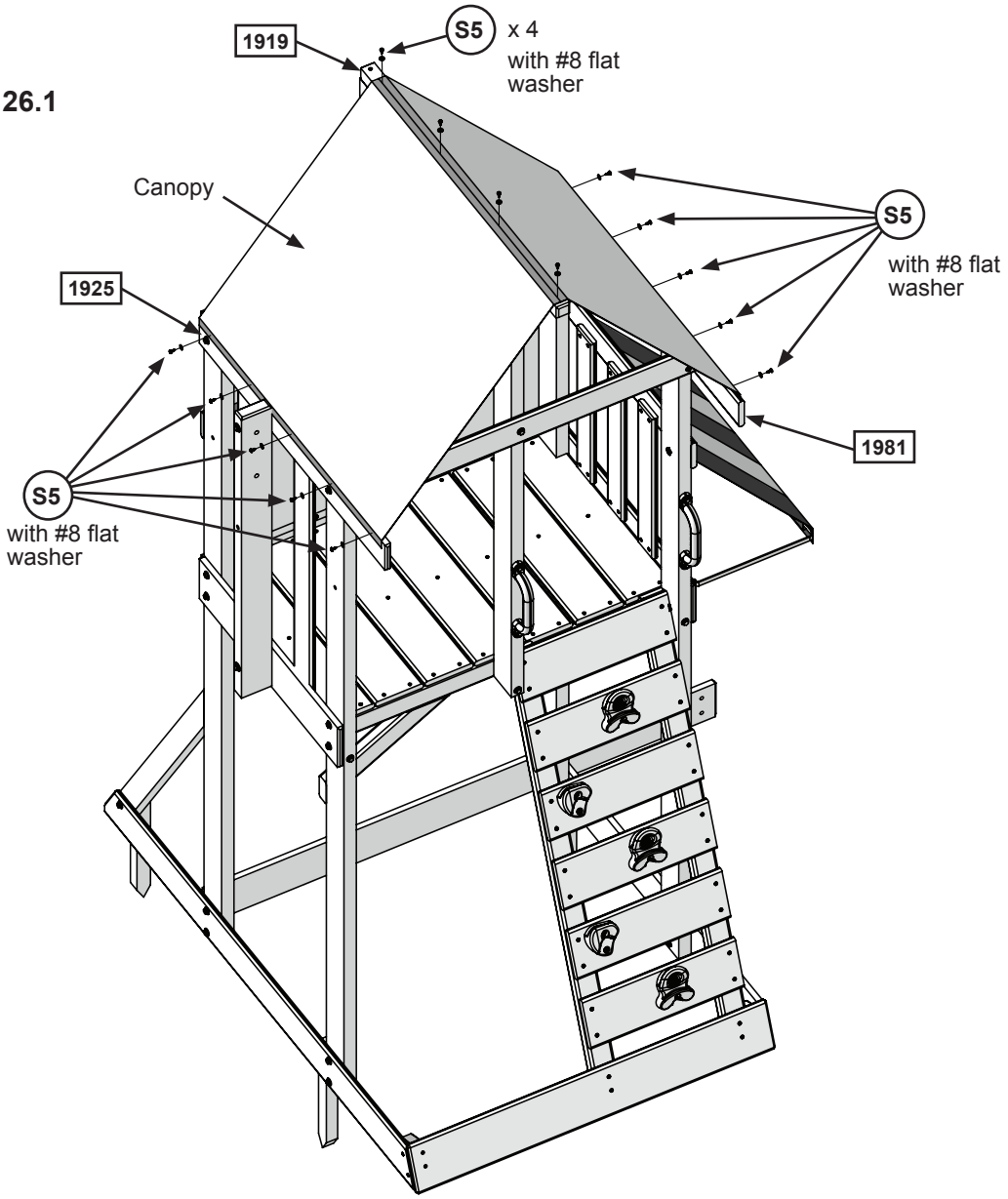

Hardware	Other Parts
14 x (S5) #8 x 1/2” Pan Screw (with #8 flat washer)	1 x Canopy

Step 27: Café Table Assembly Part 1

Note: Pre-drill all holes using a 1/8” drill bit before installing the lag screws.

A: Attach 1 (1926) Table Support to the inside of each (1500) Post on the Cafe Wall side through the middle hole using 1 (LS3) 1/4 x 3” Lag Screw (with flat washer(FW1)) per board. The distance from ground to the middle hole should measure 18”. (fig. 27.1)

B: Make sure both (1926) Table Supports are level then attach to the posts in the remaining holes with 2 (LS3) 1/4 x 3” Lag Screws (with flat washers (FW1)) per support. (fig. 27.1)

Fig. 27.1

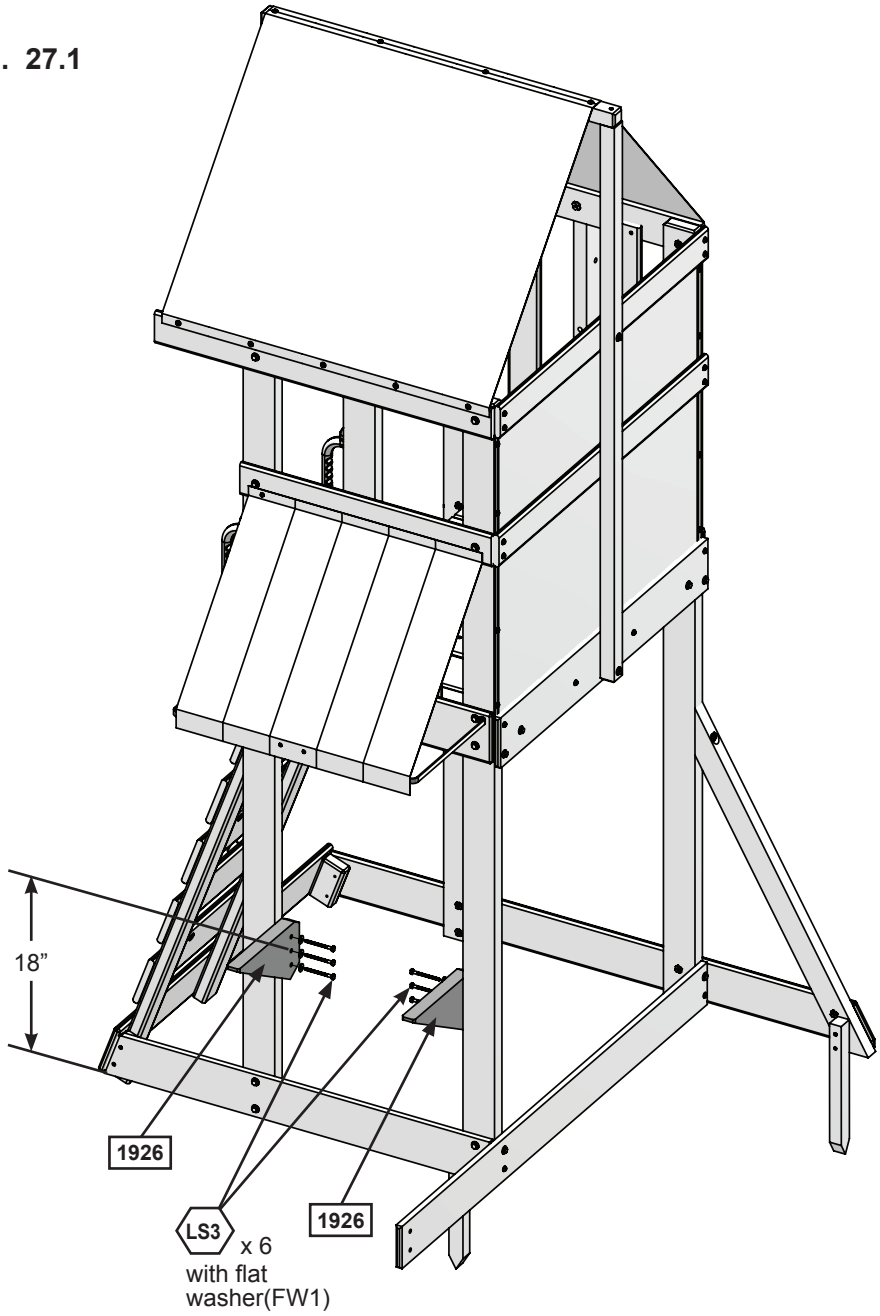

Wood Parts

2 x 1926 Table Support 1-1/2 x 5-3/8 x 12-5/16”

Hardware

6 x LS3 1/4” x 3” Lag Screw (with flat washer(FW1))

Step 27: Café Table Assembly Part 2

C: Attach 1 (1911) Table Top to the top of (1926) Table Supports, tight to (1500) Posts, using 4 (S2) #8 x 1-1/2" Wood Screws, as shown in fig. 27.2 and 27.3.

D: Tight to the first (1911) Table Top attach a second one with 2 (S2) #8 x 1-1/2" Wood Screws in the inside holes and 2 (S1) #8 x 1-1/8" Wood Screws in the outside holes as shown in fig. 27.3. The cut corners should be on the outside edges of the table.

Fig. 27.3

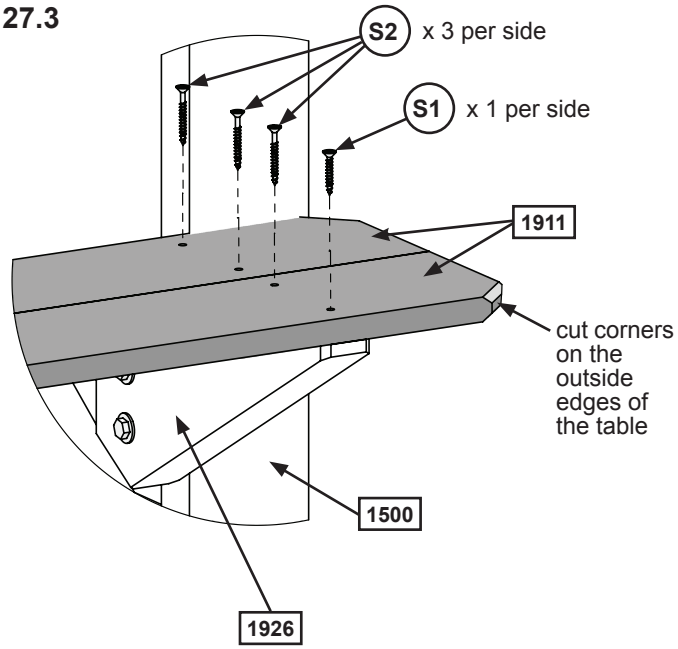

Fig. 27.2

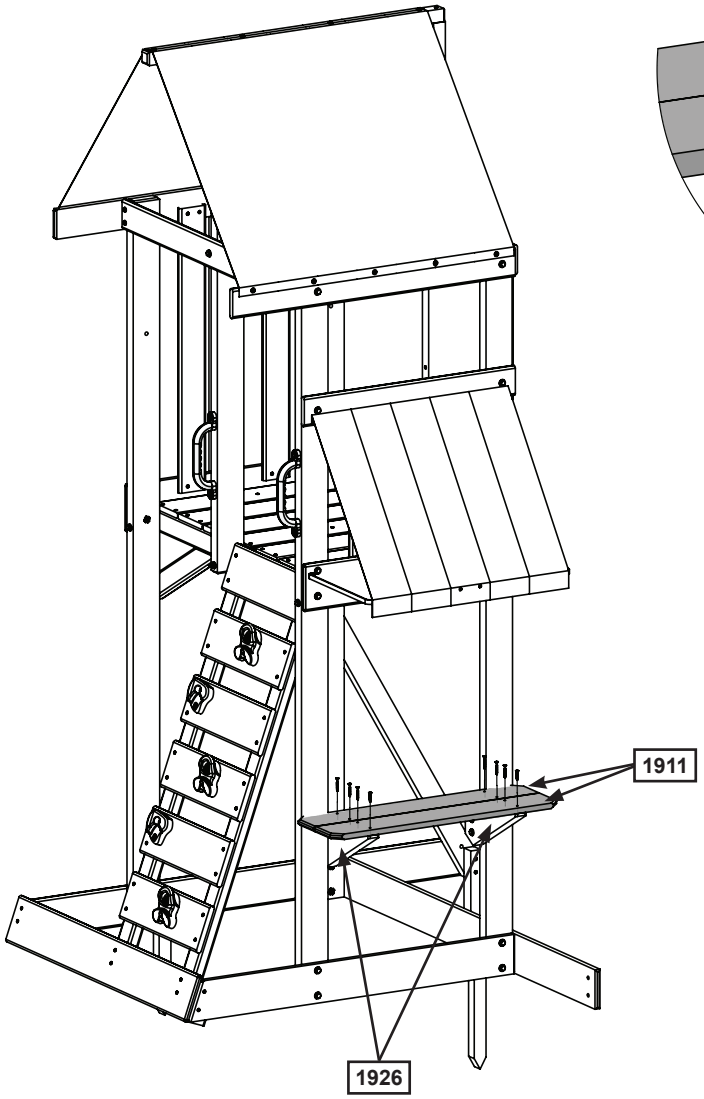

Wood Parts

2 x 1911 Table Top 5/8 x 4-1/2 x 28-7/8"

Hardware

2 x S1 #8 x 1-1/8" Wood Screw

6 x S2 #8 x 1-1/2" Wood Screw

Step 28: Seat Assembly

A: Attach (1922) Seat Rail flush to the top and outside edges of 2 (1921) Seat Post with 4 (S2) #8 x 1-1/2" Wood Screws as shown in fig. 28.1. Notice the bolt holes in (1921) Seat Posts are at the bottom of the boards.

B: Centre (1910) Seat on top of (1921) Seat Posts and attach with 4 (S2) #8 x 1-1/2" Wood Screws. (fig. 28.1)

Fig. 28.1

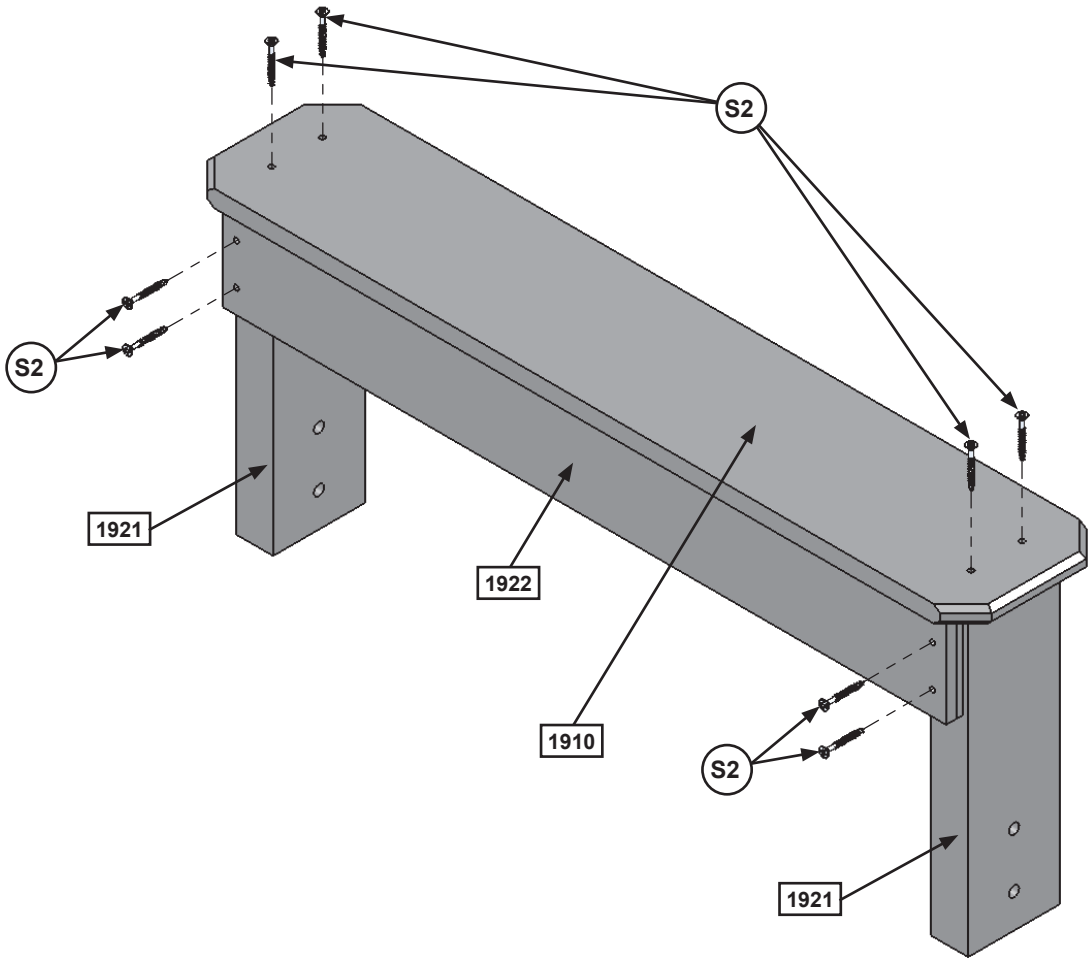

Wood Parts

1 x 1910 Seat 5/8 x 5-3/8 x 28-7/8"
2 x 1921 Seat Post 1-3/8 x 3-3/8 x 11"
1 x 1922 Seat Rail 5/8 x 3-3/8 x 27"

Hardware

8 x S2 #8 x 1-1/2" Wood Screw

Step 29: Attach Seat Assembly to Fort

A: With (1922) Seat Rail facing the fort, attach (1917) Lower Back to (1921) Seat Post using 2 (H2) 1/4 x 2” Hex Bolts (with lock washer, flat washer and t-nut). (fig. 29.1 and 29.2)

B: On the other side of the Seat Assembly attach (1920) Seat Bottom to (1921) Seat Post with 2 (H2) 1/4 x 2” Hex Bolts (with lock washer, flat washer and t-nut). (fig. 29.1 and 29.2)

C: Attach (1920) Seat Bottom to (1914) Cafe Ground with 2 Corner Braces using 3 (S5) #8 x 1/2” Pan Screws per brace, as shown in fig. 29.1 and 29.3.

Fig. 29.1

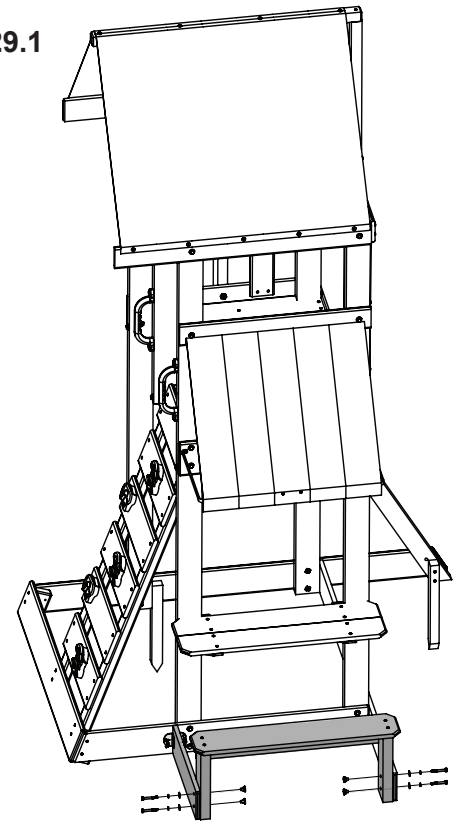

Fig. 29.3

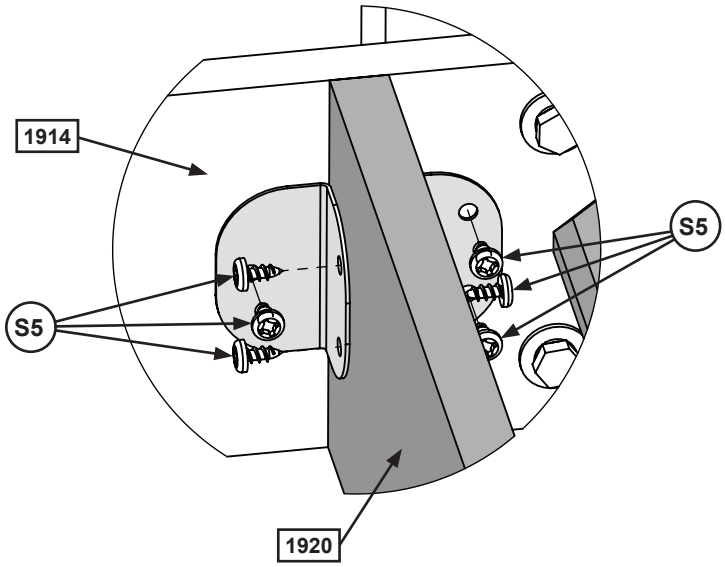

Fig. 29.2

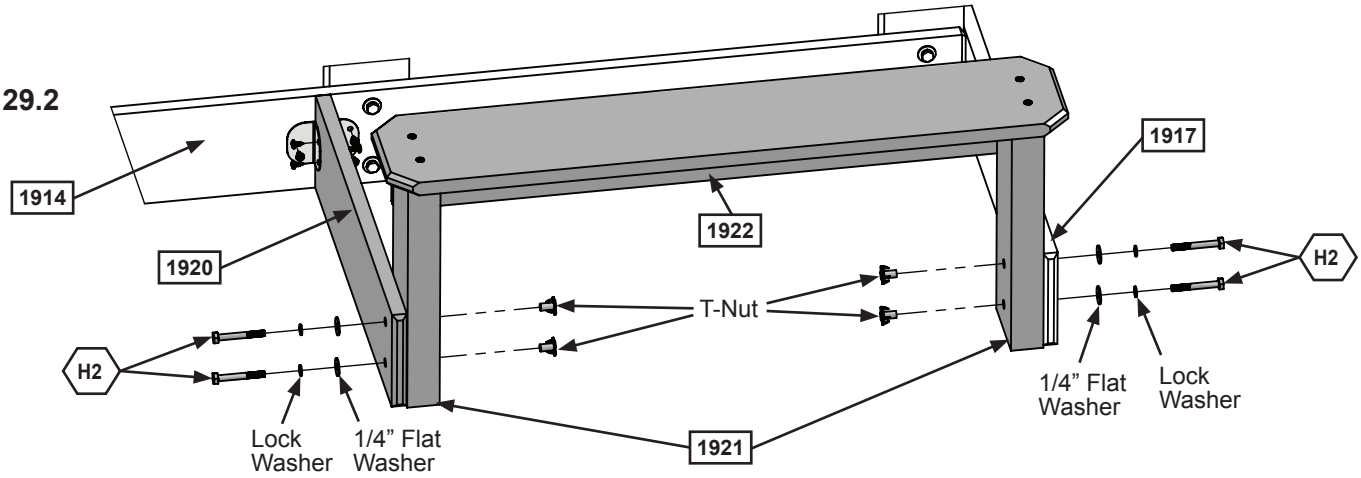

Wood Parts	Hardware	Other Parts
1 x 1920 Seat Bottom 5/8 x 4-1/2 x 17-3/4”	4 x H2 1/4” x 2” Hex Bolt (with 1/4” lock washer, 1/4” flat washer and 1/4” t-nut)	2 x Corner Brace
	6 x S5 #8 x 1/2” Pan Screw	

Step 30: Attach Slide to Fort
Part 1

Note: Pre-drill all holes using a 1/8" drill bit before installing the pan screws.

A: Place Slide in the centre between (1916) Front Divider and (1500) Post. (fig. 30.1)

B: Attach slide to fort through the floor boards and into (1764) Floor Front using 3 (S7) #12 x 2" Pan Screws. (fig. 30.2)

Fig. 30.1

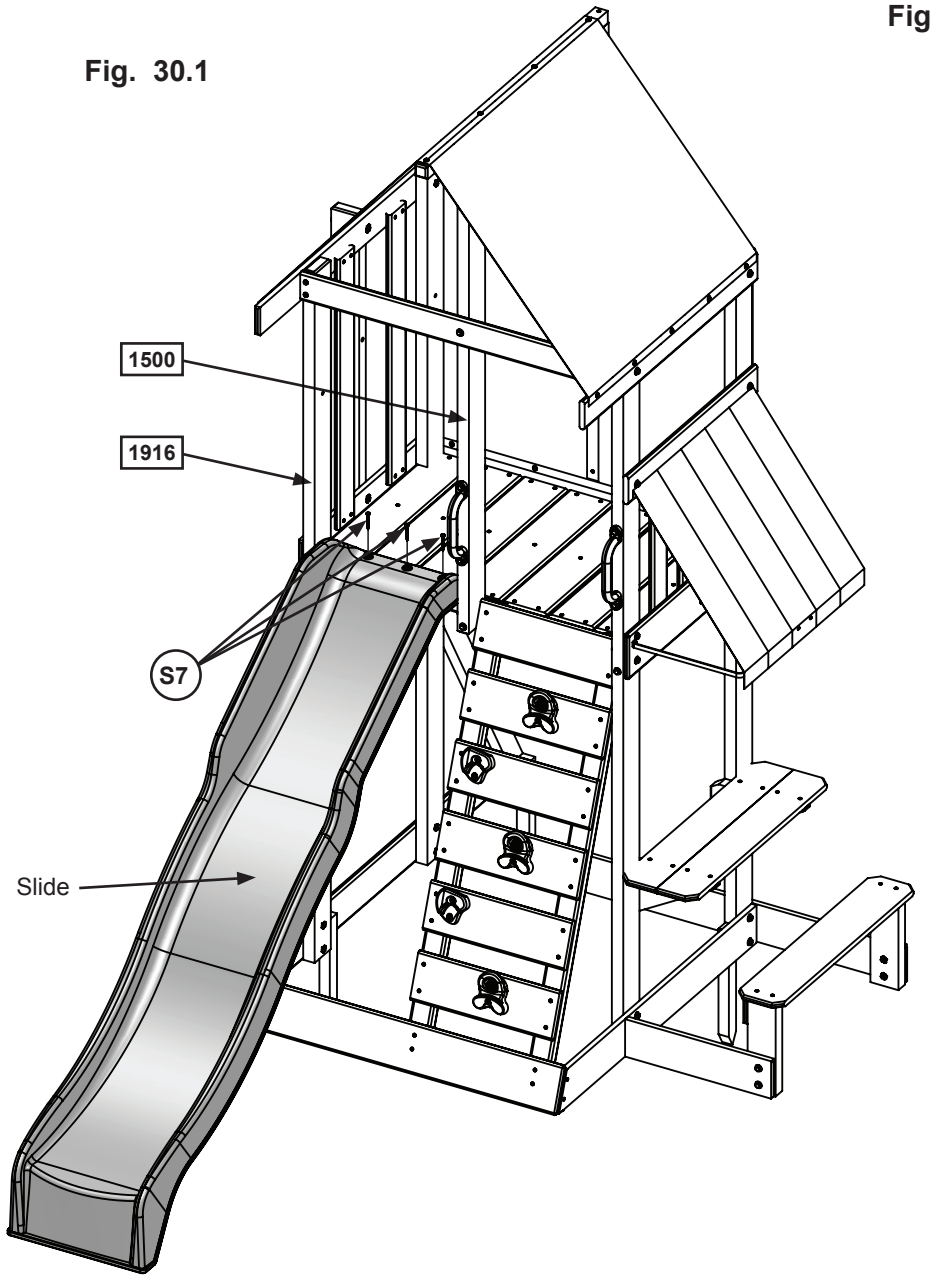

Fig. 30.2

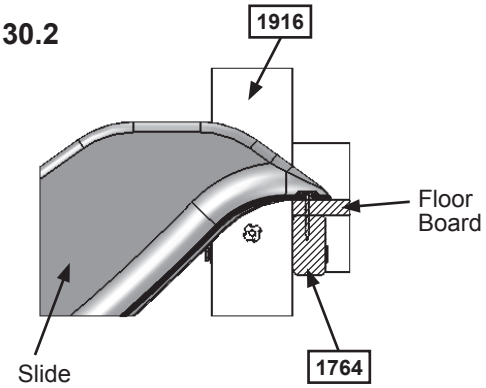

Hardware	Other Parts
3 x (S7) #12 x 2" Pan Screw	1 x Slide

Step 30: Attach Slide to Fort Part 2

A: Attach 1 (10860) Filling to (1500) Post, flush to the edge of (1500) Post, using 2 (S15) #8 x 1-3/4" Wood Screws as shown in fig. 30.3 and 30.4.

Fig. 30.3

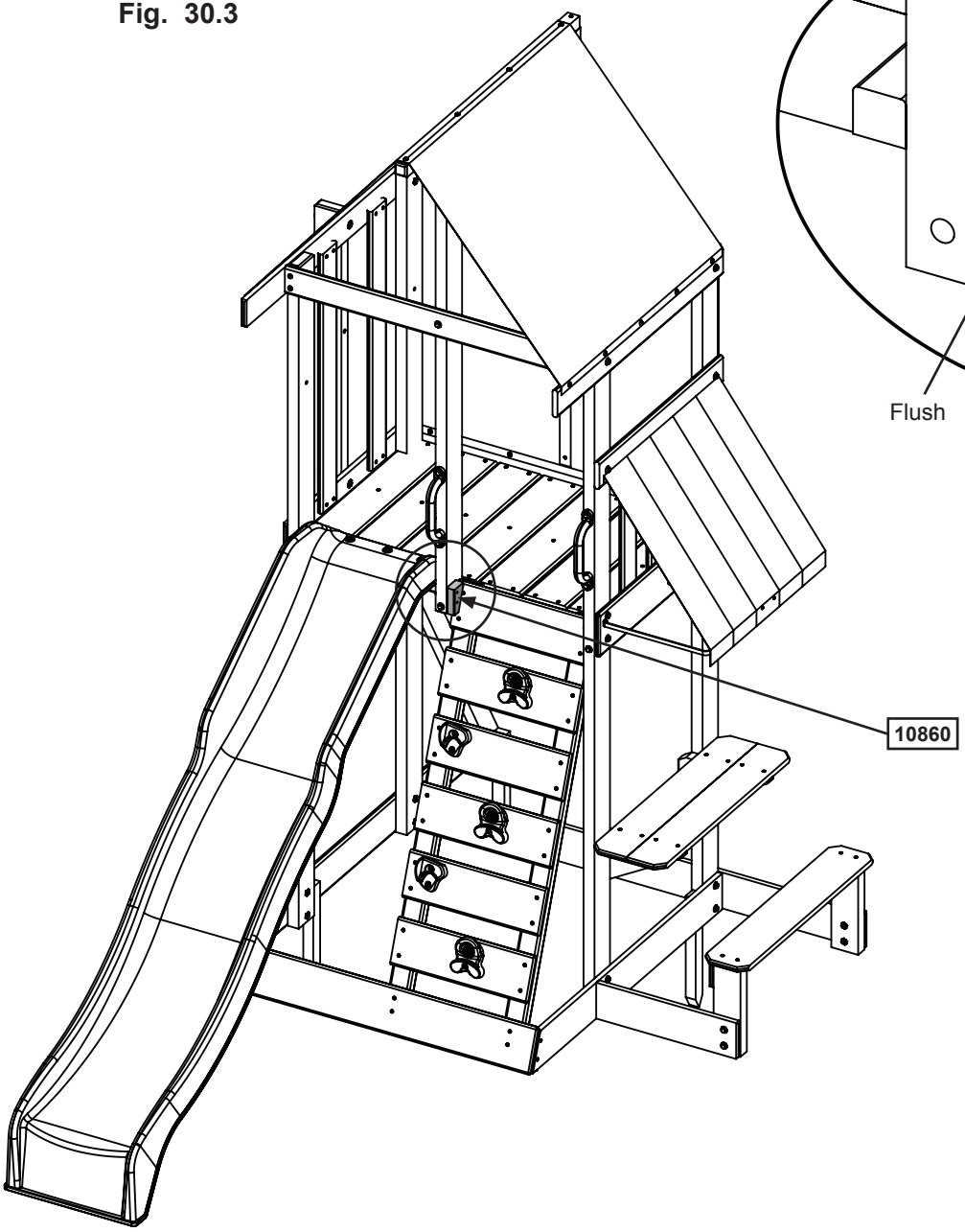

Fig. 30.4

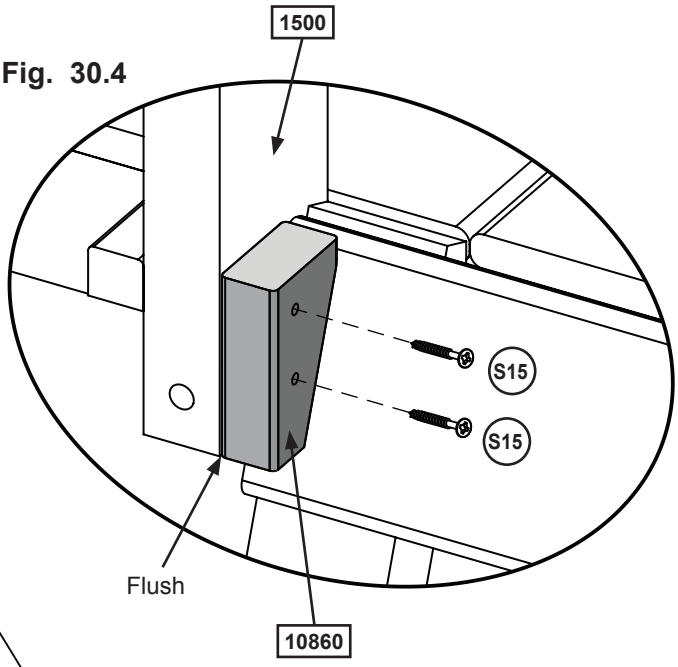

Wood Parts

1 x 10860 Filling 1" x 2" x 3 1/4"

Hardware

2 x S15 #8 x 1-3/4" Wood Screw

Step 30: Attach Slide to Fort
Part 3

A: Attach 2 (10860) Filling to (1500) Post and (1916) Front Divider, tight to the bottom of the Slide, using 2 (S15) #8 x 1-3/4" Wood Screws per Filling, as shown in fig. 30.5, 30.6 and 30.7.

Fig. 30.5

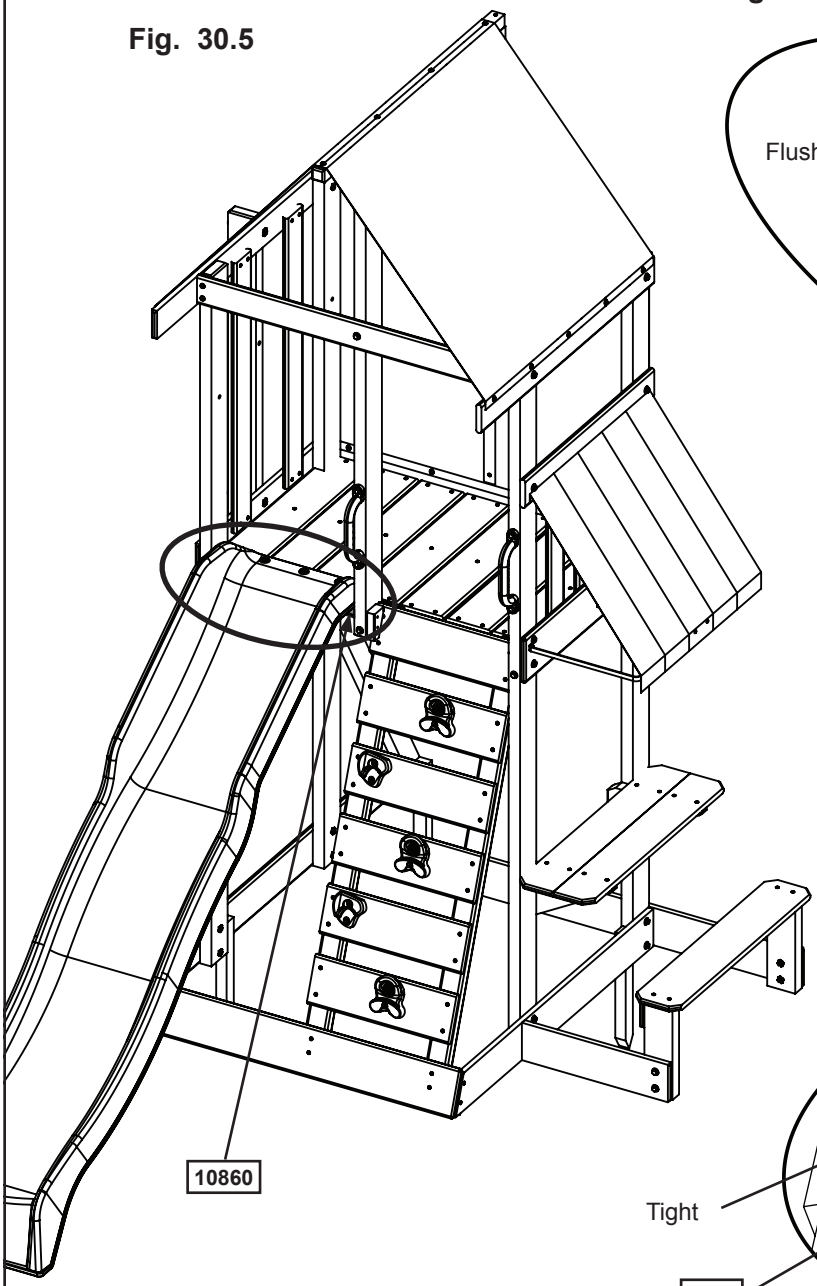

Fig. 30.6

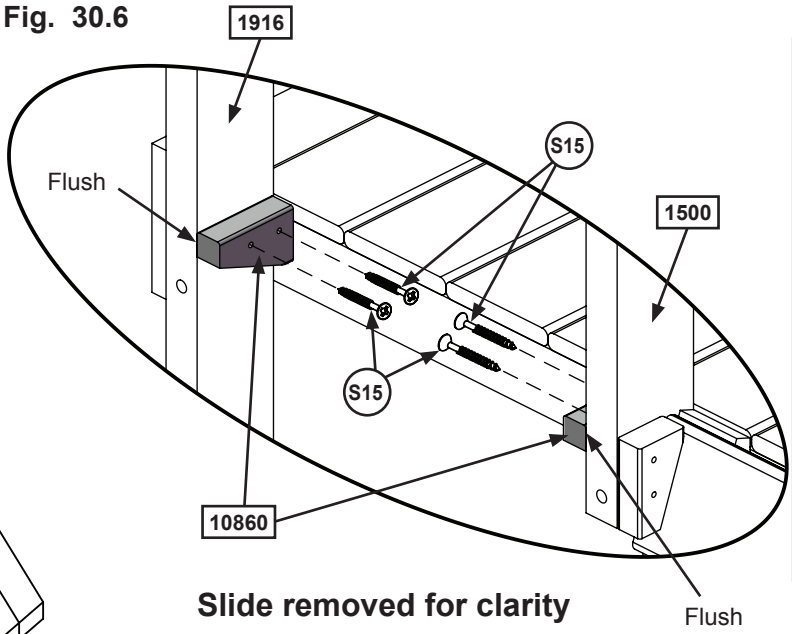

Slide removed for clarity

Fig. 30.7

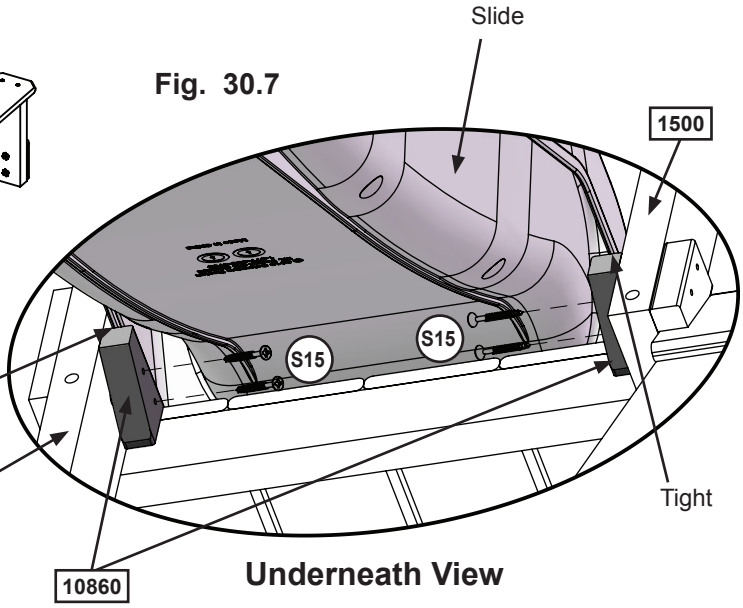

Underneath View

Wood Parts

2 x 10860 **Filling 1" x 2" x 3 1/4"**

Hardware

4 x S15 **#8 x 1-3/4" Wood Screw**

Step 31: Attach Swing Assembly to Fort

A: Attach Swing Assembly from Step 4 to (1861) SW Mount with 1 (G5) 5/16 x 4-1/2” Hex Bolt (with lock washer, flat washer and t-nut) and 1 (G8) 5/16 x 2” Hex Bolt (with 2 flat washers and 1 lock nut) as shown in fig. 31.1.

Fig. 31.2

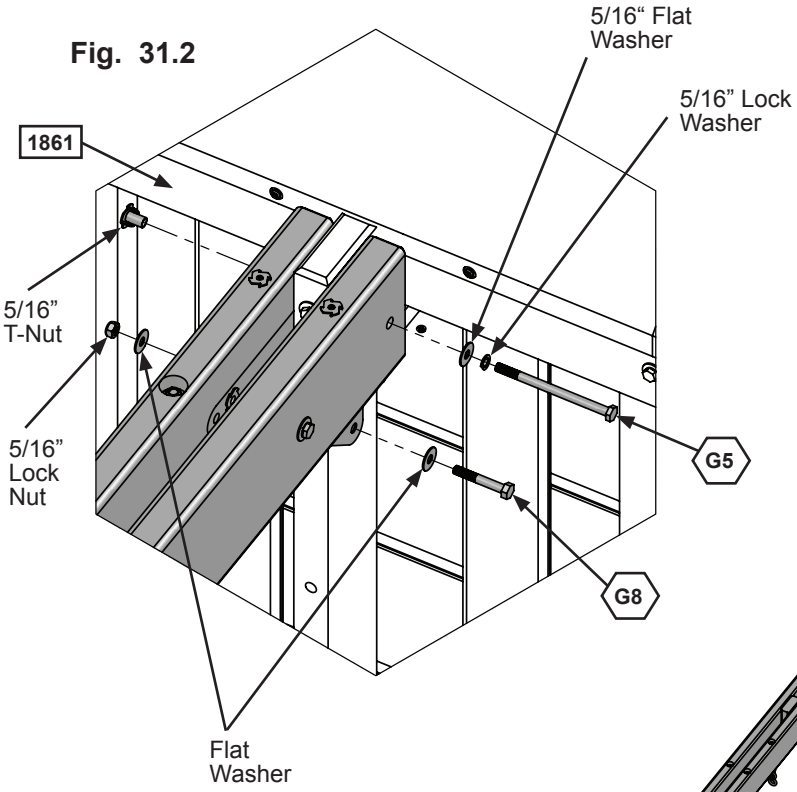

Fig. 31.1

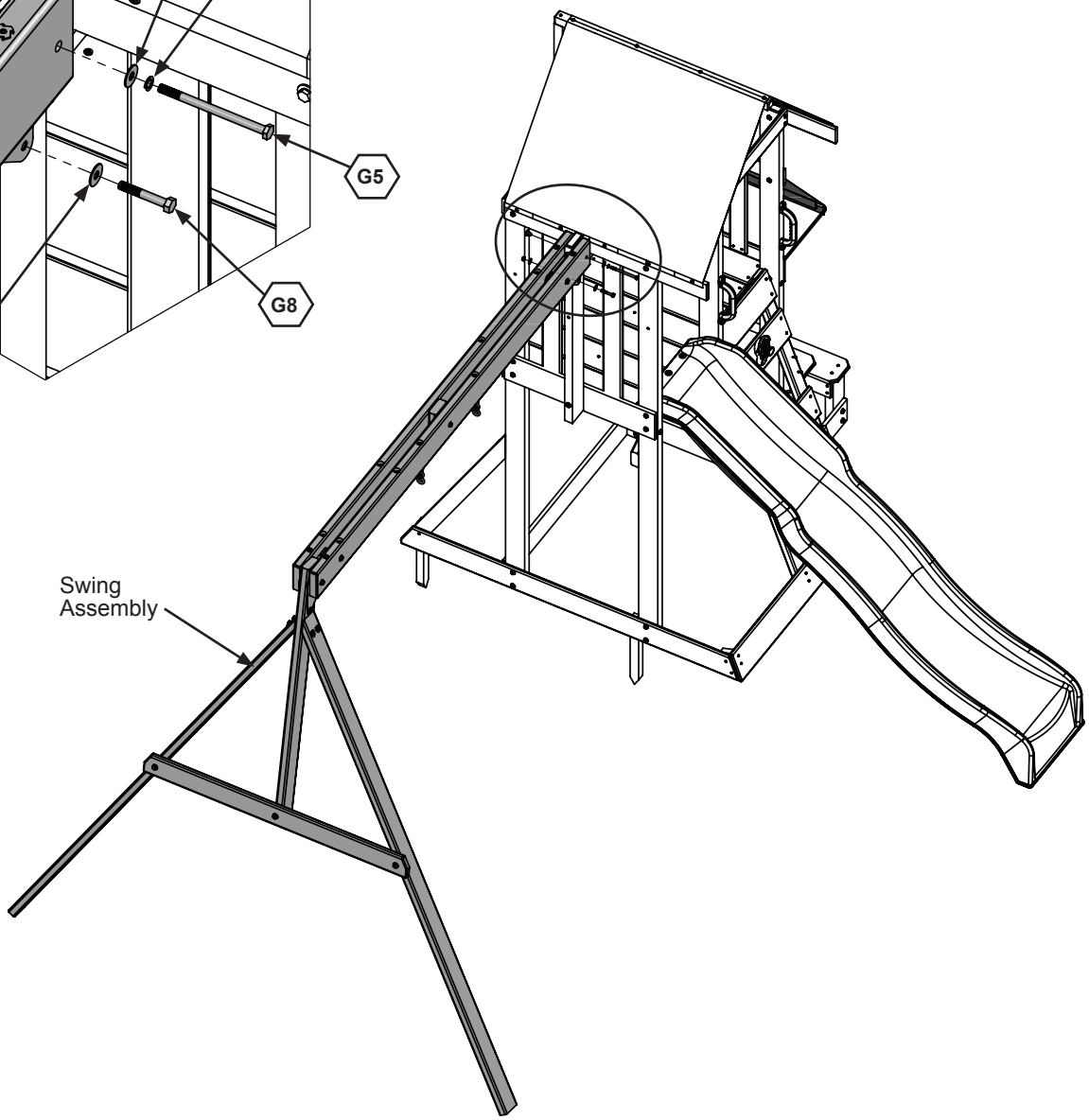

Hardware

1 x G8 5/16 x 2” Hex Bolt (5/16” flat washer x 2, 5/16” lock nut)

1 x G5 5/16 x 4-1/2” Hex Bolt (5/16” flat washer, 5/16” lock washer, 5/16” t-nut)

Step 32: Attach Swing Ground Stakes

A: Drive 1 (0318) Ground Stake 10-1/2” into the ground at each (1863) SW Post and attach with 2 (S3) #8 x 2-1/2” Wood Screws per ground stake. (fig. 32.1 and 32.2)

⚠WARNING: To prevent tipping and avoid potential injury, stakes must be driven 10-1/2” into ground. Digging or driving stakes can be dangerous if you do not check first for underground wiring, cables or gas lines.

Fig. 32.2

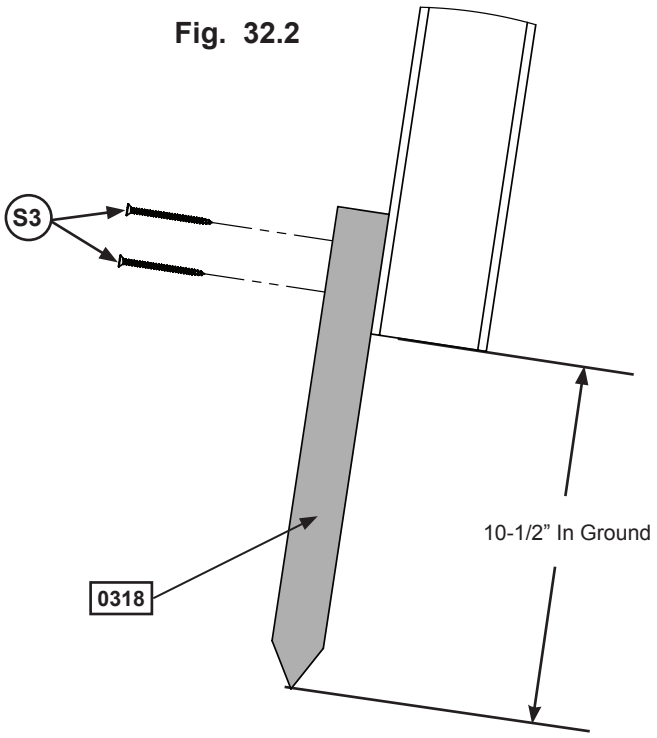

Fig. 32.1

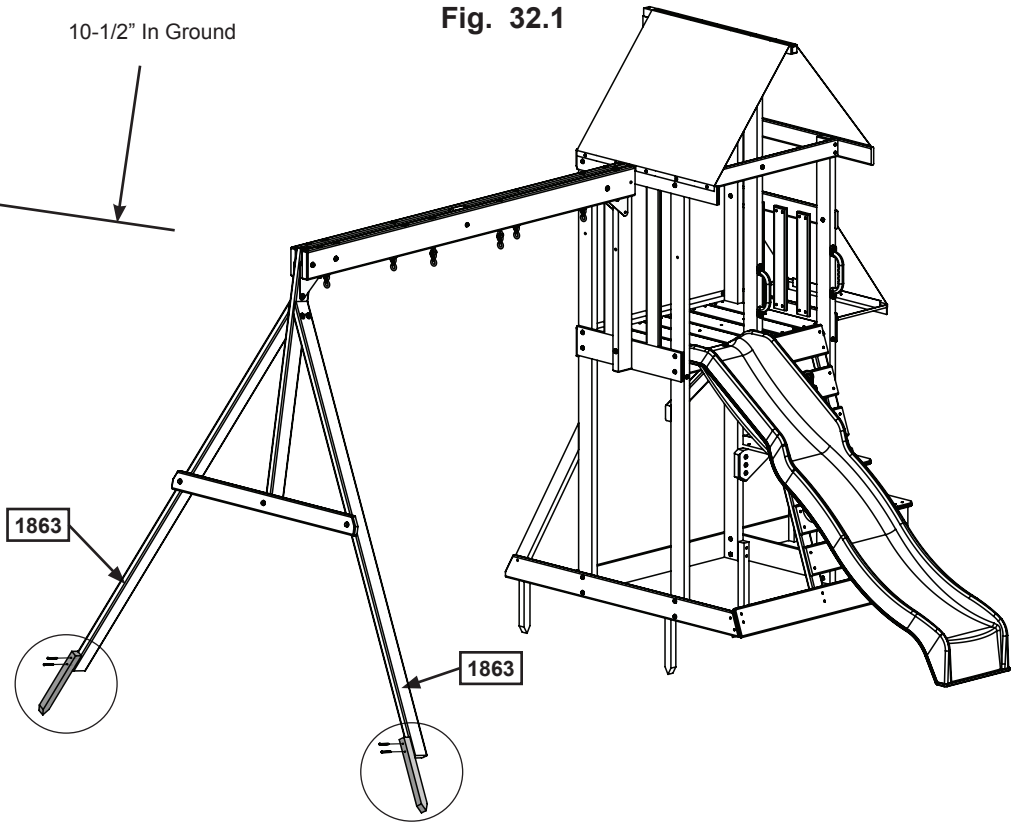

Wood Parts

2 x 0318 Ground Stake 1-1/4 x 1-1/2 x 14”

Hardware

4 x S3 #8 x 2-1/2” Wood Screw

Step 33: Attach Acro and Swings

⚠WARNING: Check entire play centre for bolts protruding beyond T-Nuts. Use extra washers to eliminate this condition.

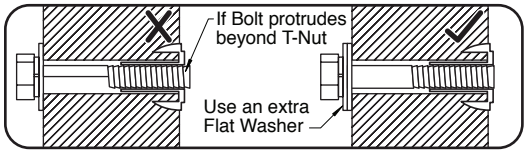

A: Attach 1 Acro Swing to the Bolt-Thru Swing Hangers. (fig. 33.1)

B: Attach 2 Belt Swings to the Bolt-Thru Swing Hangers. (fig. 33.1)

C: Insert flexible Swing Hanger Cover over hook. (fig. 33.3)

D: Slide Swing Hanger Cover around hook until at top. (fig. 33.4)

E: Hook swing rope onto hook. (fig. 33.5)

F: Twist and flex Swing Hanger Cover onto open end of hook. (fig. 33.6)

Fig. 33.3

Fig. 33.4

Fig. 33.5

Fig. 33.6

Fig. 33.1

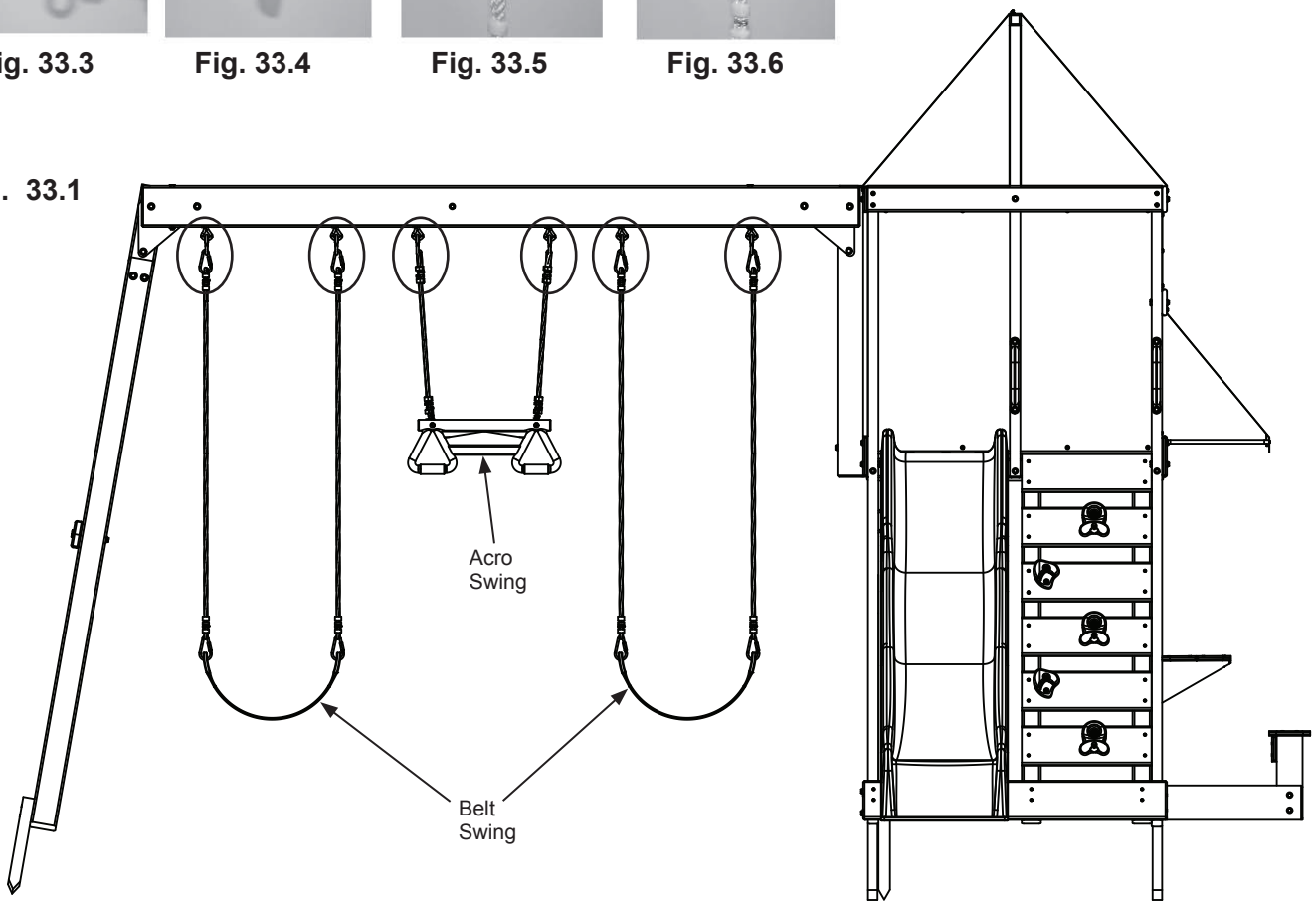

Other Parts

2 x Belt Swings
1 x Acro Swing
6 x Swing Hanger Cover

Final Step: Attach I.D. Plaque

ATTACH THIS WARNING & I.D. PLAQUE TO A PROMINENT LOCATION ON YOUR PLAY EQUIPMENT! (Fort or Swing Post)

This provides warnings concerning safety and important contact information.
A Tracking Number is provided to allow you to get critical information or order replacement parts for this specific model.

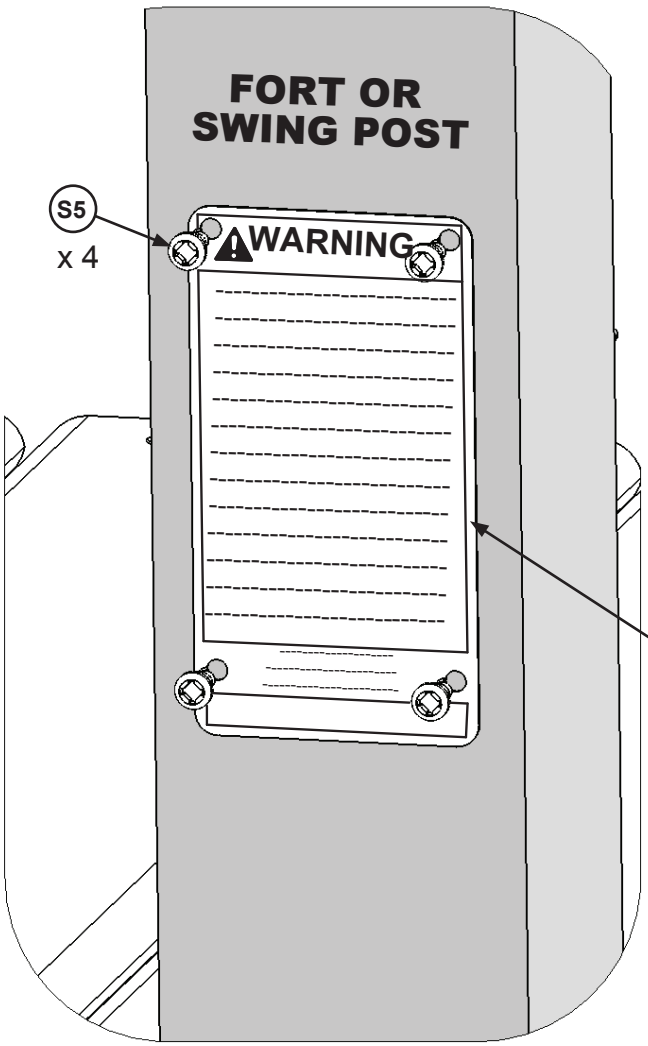

WARNING
AVERTISSEMENT

CONTINUOUS ADULT SUPERVISION REQUIRED!

STRANGULATION HAZARDS

Never allow children to play with ropes, clotheslines, pet leashes, cables, chains or cord-like items when using this playset or to attach these items to play-set.

Never allow children to wear loose fitting clothing, ponchos, hoods, scarves, capes, necklaces, or items with draw-strings, cords or ties when using this play-set.

Never allow children to wear bike or sport helmets when using this play-set.
Failure to prohibit these items increases the risk of serious injury and death to children from entanglement and strangulation.

SERIOUS HEAD INJURY HAZARD
Maintain shock absorbing material under and around play-set as recommended in the Installation & Operating Instructions. Installation over concrete, asphalt, dirt, grass, carpet and other hard surfaces creates a risk of serious injury or death from falls to the ground.

SURVEILLANCE CONSTANTE D'ADULTES EST REQUIS!

Risques D'étranglement

Ne jamais laisser les enfants jouer avec des cordes, cordes à linge, laisses pour animaux , des câbles,des chaînes ou ces type articles pendant de l'utilisation de cet portique de jeu ou à l'attaché de ces éléments à la portique de jeu.

Ne jamais laissez les enfants de porter des vêtements amples, des ponchos, des hottes, des foulards, capes, des colliers ou des articles avec cordes attirent ou les cordons pendant l'utilisation de cet portique de jeu.

Ne jamais laissez les enfants porter un casque de vélo oude sport quand ils utilisent ce portique de jue.
Défaut d 'interdire ces éléments augmente le risque de blessures graves et de décès des enfants de enchevêtrement et d'étranglement.

RISQUE DE BLESSURES GRAVES DU TêTE
Maintenir le matériau absorbant les chocs sous et autour de la portique de jeu comme recommandé danslesInstructions D'installation.Installation sur béton, de l'asphalte, sol, de l'herbe, tapis et autres surfaces hdure crée un risque de blessure à la tête graves ou la mort causé par tomber à la sol.

THIS PRODUCT IS INTENDED FOR USE BY CHILDREN FROM AGES 3 TO 10; weight limit of 110 lbs. per child. Maximum number of users, Installation & Operating Instructions; other information is available at:

POUR LES ENFANTS DE 3 À 10 ANS D'ÂGE; limite de 110 Livres par enfant. Nombre maximum d' utilisateurs, installation et d'utilisation; d'autres informations sont disponibles sur:

www.KidKraft.com
Contact us at: KidKraft
Dallas, TX 75244 USA
1-800-933-0771

Tracking Number:
Numèro de Suivi:

Attach with (S5) #8 x 1/2" Pan Screws to a location on your set that is easily seen and read by a supervising adult.

Hardware	Other Parts
4 x (S5) #8 x 1/2" Pan Screw	1 x KidKraft I.D. Plaque

NOTES

NOTES

NOTES

3 EASY WAYS TO REGISTER YOUR PRODUCT 24/7

1) Scan this QR Code with your smart phone to complete your product registration directly from your phone:

2) Complete the registration online at: https://www.kidkraft.com/us_en/warranty/

3) Mail this completed form to: KidKraft Inc., 4630 Olin Road, Dallas, Tx 75244 USA
Make sure to include a copy of your proof of purchase

KIDKRAFT

Consumer Registration Card

First Name | Initial | Last Name

Street | Apt. No.

City | State/Province | ZIP/Postal Code

Country | Telephone Number

E-Mail Address

Model Number | Model Name

Model Number & Name example
F24145 AINSLEY PLAY SYSTEM

Purchased From | Date Purchase

MM / DD / YY

Serial Number (on ID Plaque)

ID Plaque example

Box #: _____ 1 of _____
Box #: _____ 2 of _____
Box #: _____ 3 of _____
Box #: _____ 4 of _____
Box #: _____ 5 of _____
Box #: _____ 6 of _____

Box # (Ex: B29410 1of 6)

1 OF DE 6

ITEM #
ARTICLE N°
N.° DE ARTÍCULO
B29410

For common questions or for information on ordering replacement parts:

Help Center: https://kidkraft.zendesk.com/hc/en-us/