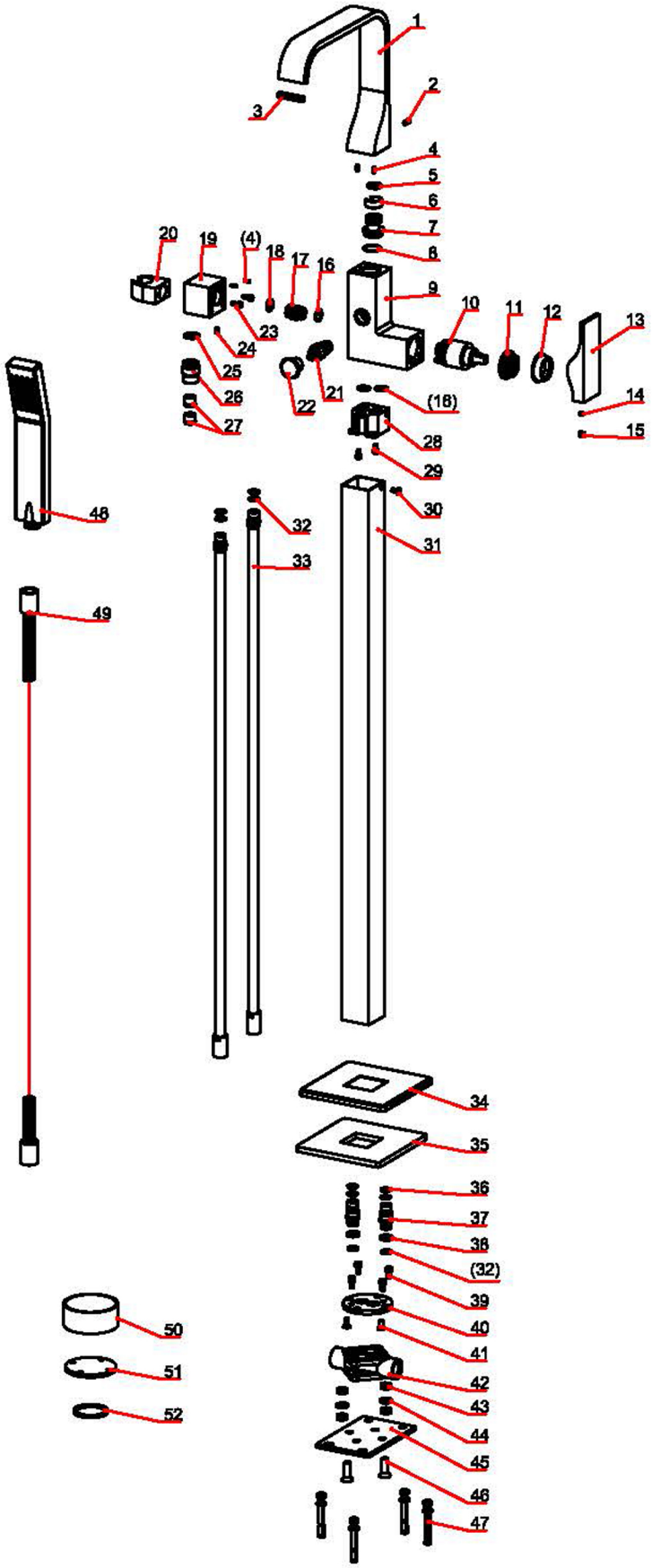

AB2180

No.	Description	Material	QTY	Code
52	2280 protecting ring	PVC	1	70030028052
51	2280 guard plate	A3	1	50020047701
50	1050 washer	NBR	1	70020005830
49	Flexible shower hose (1500)	Subassembly	1	50040036300
48	Hand shower	Subassembly	1	50030053401
47	M6 bolt	Stainless steel	4	50060019900
46	M8*25 fixing screw	Stainless steel	2	60060014400
45	500200826-2184 base plate	Q235A	1	50020082654
44	Washer	65Mn	2	70030016900
43	M8*5 fixing nut	Stainless steel	4	50060014600
42	2280 inlet piece（NPT）	H59	1	50040159852
41	M5*12 sunk screw	Stainless steel	2	50060020200
40	2280 fixing seat	H59	1	50020047652
39	M5*10 fixing screw	Stainless steel	4	60060019100
38	M16*1 filter washer	NBR	2	70020018430
37	400601421-2280 connector	H59	2	40060142152
36	10*1.8 "O" ring	NBR	4	70010008430
35	2223 washer	Sponge	1	70020040930
34	2223 decorative plate	H65	1	50010124901
33	2184 inlet pipe	Subassembly	2	50040157953
32	10*2 "O" ring	NBR	6	70010026230
31	2223 square pipe	Subassembly	1	50020080901
30	M5*10 fixing screw	Stainless steel	1	50060018900
29	M4*8 fixing screw	Stainless steel	2	50060009200
28	2223 mainbody connector	H59	1	40060155552
27	check valve（14*12）	Subassembly	2	20070017322
26	2534 shower connector	H59	1	40060117801
25	17*1.8"O" ring	NBR	1	70010001630
24	M5*6 fixing screw	Stainless steel	1	50060000600
23	M4*12 fixing screw	Stainless steel	2	50060006600
22	2581diverter knob	H59	1	40050040901
21	2839 divertor set A	Subassembly	1	20070000900
20	2180 shower holder	H59	1	50030092501
19	2180 holder seat	H59	1	50030092401
18	16*2.5"O" ring	NBR	1	70010001530
17	2180 connector	H59	1	40010062652
16	13.2*1.8 "O" ring	NBR	3	70010004830
15	2508 chrome button	ABS	1	50010031101
14	M5*4 fixing screw	Subassembly	1	50060012000
13	3051 handle	Zinc alloy	1	20010021801
12	2218 decorative cover	ABS	1	50010078001
11	1298 cartridge nut（M37*1.25）	H59	1	40060075252
10	35H cartridge	Subassembly	1	20060003400
9	2223 mainbody	ZCuZn40Pb2	1	10020184401
8	23.7*1.8 "O" ring	NBR	1	70010002230
7	2280 connector	H59	1	40060079201
6	2356 separator	POM	1	70030020252
5	14*2.65 "O" ring	NBR	1	70010001130
4	Ø3*8 dowel	Stainless steel	4	40010060600
3	1258 insert	POM	1	50060011231
2	M5*12 fixing screw	Stainless steel	1	60060016600
1	2223 outlet pipe	Subassembly	1	30020032101