GKFA361810BCD

Solid Surface White Stone Farmhouse Double Bowl Kitchen Sink

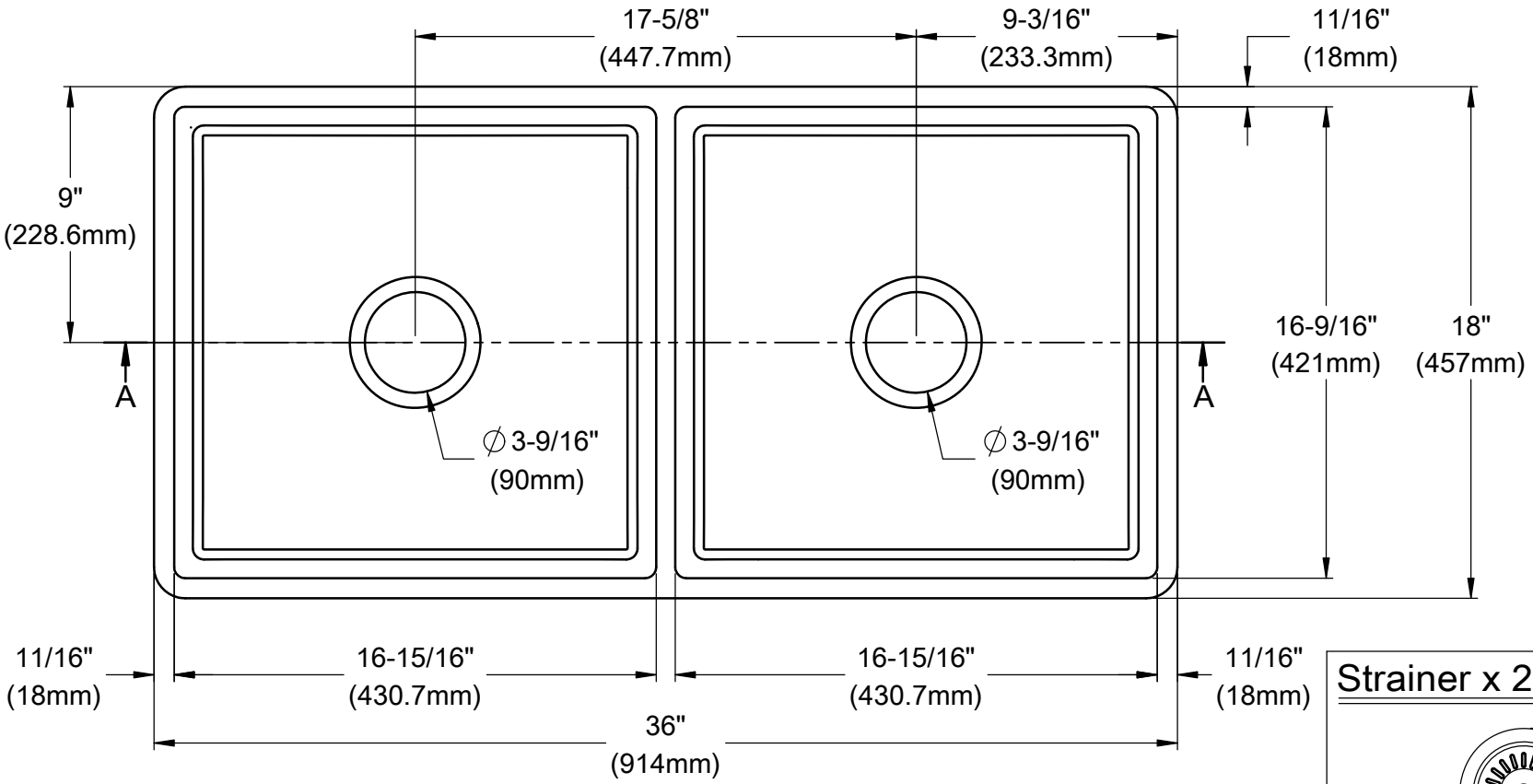

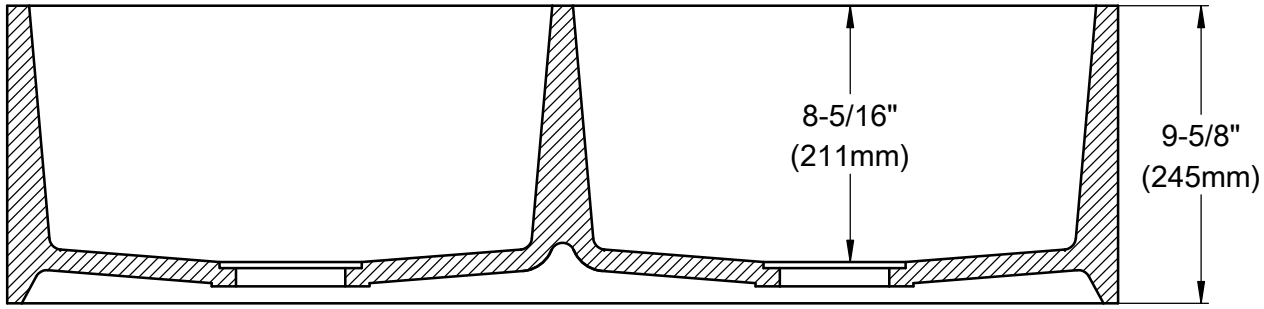

Section A-A

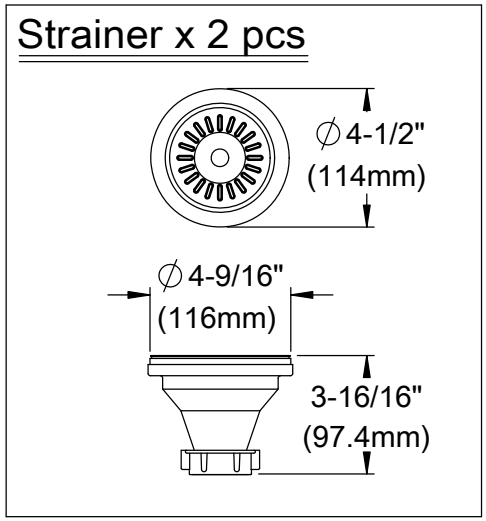

Ref# GKFA361810BCD | 2018-07-A