Saramonic

Sound.Remarkable.

Super-cardioid Shotgun Microphone

超心型枪式麦克风

# Vmic5

User Manual

用户手册

## Product Introduction

The Saramonic Vmic5 is a super-cardioid shotgun microphone that provides broadcast-quality audio to DSLR, Mirrorless and Video Cameras. The Vmic5 features a output level control (0dB, +10dB), a high-pass filter (150 Hz selectable) to increase intelligibility of dialogue.

The detachable 3.5mm cable connects the Vmic5 to your camera's audio input, and the headphone output allows you to monitor the incoming audio. Specially designed shock mount system provides isolation from vibration and mechanical noise.

Built-in battery allows you to be charged via USB-C (DC 5V/1A). Includes foam windshield, fur windscreen, USB-C charging cable, 3.5mm TRS audio cable in the package.

## Highlights

- Super-cardioid polar pattern
- Shock mount system for reducing mechanism noise
- High-pass filter (flat/150 Hz)
- Output level control (0dB, +10dB)
- Headphone monitor output, 3.5mm TRS audio output, metal cold shoe mount
- Powered by built-in battery and USB-C (DC 5V/1A)
- Includes foam windshield, fur windscreen, USB-C charging cable, 3.5mm TRS to TRS audio output cable for camera

## Product Structure

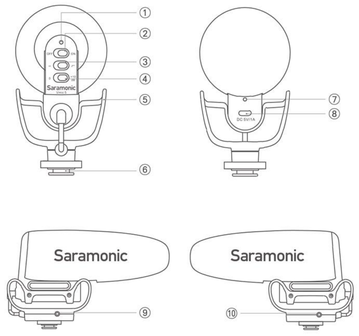


① **Power LED**
Power ON=Solid Blue Light
Low Battery=Solid Red Light

② **Power Switch**

③ **High-pass Filter Switch**

④ **Output Gain Control Switch (0dB, +10dB)**

⑤ **Shock Mount System**

⑥ **Cold Shoe Mount**

⑦ **Charging Status LED**
Charging=Solid Red Light
Fully Charged=Solid blue Light

⑧ **USB-C Charging Port (DC 5V/1A )**

⑨ **3.5mm Headphone Output**

⑩ **LINE OUT Port**

## Set Up Guide

1. Turn the switch to ON position when the Power LED lights blue.
2. Unscrew the locking screw of the microphone, and slide it onto DSLR or others.
3. Tighten the screw again to fix it on the position.
4. Attach the Vmic5 to your camera's shoe mount. Connect the Vmic5's microphone output to the microphone input of the camera using the supplied 3.5mm audio output cable.
5. Adjust the microphone's level control according to your needs. The 0dB is appropriate for most scenarios, +10dB lets you to turn down your camera's preamp in order to achieve a clean sound or for picking up subjects from further away in normal recording environments.
6. If your camera lacks a headphone jack for direct monitoring, plug headphones into the headphone output jack to monitor the audio. We also suggest to recording a sample take and playing back to check if the audio level it is acceptable before recording.
7. Wearing the foam windshield in outdoors can reject wind noise and record a clear sound.
8. Turn the switch to OFF position after recording finished.

## Charging

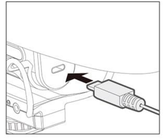

Use the supplied cable to plug into the USB-C charging cable(DC 5V/1A)

Charging=Solid Red Light

Fully Charged=Solid blue Light

## Specification

| | |
|---|---|
| Acoustic Principle | Condenser |
| Polar Pattern | Super-cardioid |
| Frequency Response | 20 – 20,000 Hz |
| Sensitivity | -26±3dB (0dB=1V/Pa @ 1KHz) |
| Signal-to-Noise Ratio | 85dB |
| Output Impedance | 200Ω |
| Gain | 0dB,+10dB |
| High-pass Filter | 150Hz |
| Maximum Output Level | 7.5dBu(@1kHz,1%THD into 1kΩ) |
| Output | 3.5mm TRS |
| SPL | 130dBu |
| Power Consumption | 3.7V/2000mAh(Built-in Battery) |
| Battery Life | 150hrs |
| Size | 185*109*66mm (7.3*4.3*2.6'') |
| Weight | 180g (6.3 oz) |

Scan the QR code and follow us!
扫描微信关注枫笛公众号

**Shenzhen Jiayz Photo Industrial., Ltd**
**深圳市长丰影像器材有限公司**

A16 Building,Intelligent Terminal Industrial Park of Silicon Valley
Power, Guanlan, Longhua District, Shenzhen, China
深圳市龙华区观澜街道大富工业区硅谷动力智能终端产业园 A16 栋

400-613-1096 www.saramonic.com info@saramonic.com

## 产品介绍

枫笛 Saramonic Vmic5 是一款超心型枪式麦克风，提供广播级音质，支持单反，微单，摄像机等设备。

Vmic5 自带输出增益控制(0dB, +10dB)，低切过滤器（150 Hz）等功能设定。同时，麦克风还带有耳机监听孔，插入耳机可监控录制效果。特别设计的减震座系统，能够减少设备晃动而产生噪音。麦克风内置电池容量支持USB-C (DC 5V/1A)充电。包装配置3.5mm TRS音频输 出线，防风棉，防风毛，Type-C充电线。将Vmic5录制的声音传输到相机内。

## 特点

- 超心型拾音模式
- 防震架
- 高通过滤器（平切/150 Hz）
- 输出增益控制(0dB, +10dB)
- LED电源指示灯
- 耳机监听孔，3.5mm TRS音频输出孔，金属冷靴座结构
- 内置锂电池供电/USB-C（直流电5V/1A）
- 配置防风棉，防风毛，USB-C充电线，3.5mm TRS转TRS相机 输出线

## 产品结构

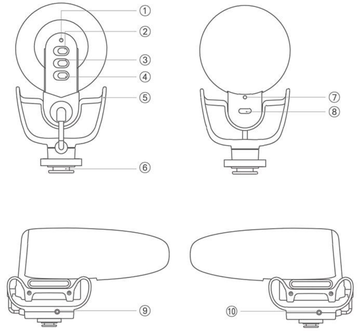


① 电源指示灯
电源开=蓝灯亮
低电量=红灯亮
② 电源开关
③ 低切开关
④ 输出增益开关
⑤ 防震架
⑥ 冷靴座
⑦ 充电指示灯
⑧ Type-C充电口（DC 5V/1A）
⑨ 耳机监听孔
⑩ 线性输出孔

## 快速操作指南

1. 将开关拨至ON位置，电源开启，LED指示灯亮蓝灯。
2. 拧开麦克风底座的旋钮，将其安装至单反或其他设备。
3. 重新拧紧旋钮，固定好麦克风位置。
4. 将Vmic5固定在相机的冷靴座上。使用提供的3.5mm音频输出线，连接Vmic5的麦克风输出孔和您相机的麦克风输入孔。
5. 根据您的需要控制麦克风音量大小。0dB适合大多数场景。+10dB可以调小相机前置放大器，以获得干净的声音，也可以在正常的录音环境中拾取更远的对象声音。
6. 如果你的相机没有耳机监听孔，你可将耳机插入麦克风的耳机输出孔进行音频监听。我们也建议在正式录音前，先做个简短的录音测试，检查音频水平是否可以接受。
7. 在户外录音条件下，为保持录音清晰的效果，请给麦克风佩戴防风棉。
8. 录音结束后，将开关拨至OFF位置。

## 充电

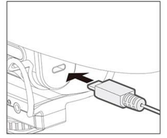

使用配套线材，连接至产品DC 5V/1A充电口；
充电过程中，充电指示灯会呈红灯常亮状态；
充满电后，充电指示灯呈蓝灯常亮，此时可直接拔出充电线；

## 技术参数

| | |
|---|---|
| 声学原理 | 电容 |
| 极性模式 | 超心型 |
| 频率响应 | 20 – 20,000 Hz |
| 灵敏度 | -26 ± 3dB (0dB=1V/Pa @ 1KHz) |
| 信噪比 | 85dB |
| 输出阻抗 | 200Ω |
| 增益 | 0dB,+10dB |
| 高通滤波器 | 150Hz |
| 最大输出电平 | 7.5dBu(@1kHz,1%THD into 1kΩ) |
| 输出接口 | 3.5mm TRS |
| 最大声压级 | 130dBu |
| 功率 | 3.7V/2000mAh( 内置 ) |
| 电池工作时间 | 150H |
| 尺寸 | 185*109*66mm |
| 重量 | 180g |