SPEAKMAN® SM-8000-P

Rainier™ Pressure Balance Valve and Trim

FEATURES

VALVES:

- Anti-scald protection
- Pressure balancing ceramic cartridge
- Adjustable temperature limit stop
- Integral stops
- 1/2" NPT female tub outlet
- 1/2" sweat shower outlet
- 1/2" sweat inlets
- Includes rough-in template

TRIM:

- Square style
- Mounting plate with seal
- Metal handle
- Durable plastic trim plate

FINISH:

PC

COMPLIANCE:

- ASME A112.18.1/CSA B125.1 certified
- Meets ASSE 1016
- ADA Compliant

WARRANTY:

- 1 Year Limited

Architect/Engineer Approval Space:

P: 800-537-2107
W: WWW.SPEAKMAN.COM
R: DECEMBER 2022

Management Systems Registered to ISO 9001

DIMENSIONS:

NOTE: 1. All dimensions are in inches (millimeters) unless otherwise specified and are subject to change without notice. 2. Unless otherwise specified, all inlets and outlets are 1/2" female copper sweat. 3. For ADA mounting locations, consult ADAAG, ANSI A117.1, or static regulations. Contractor pack valves & trim kits available.

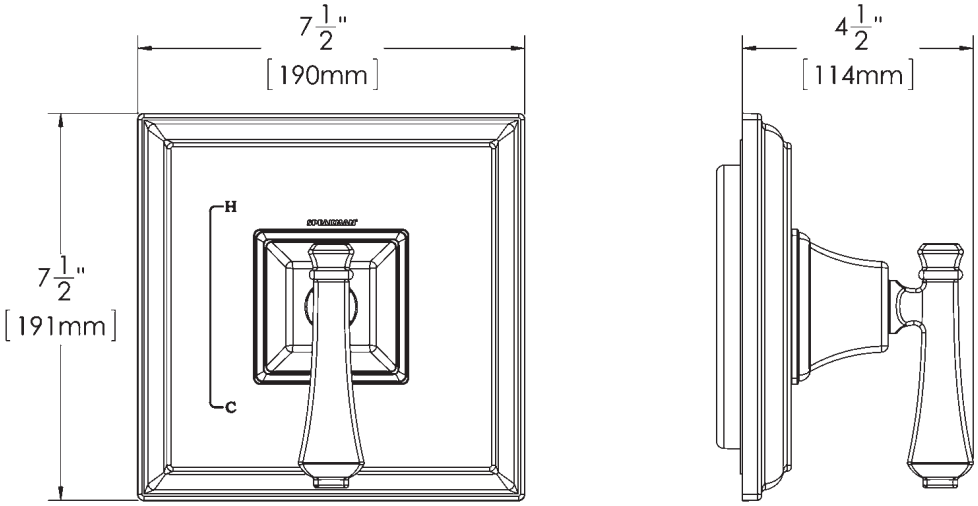

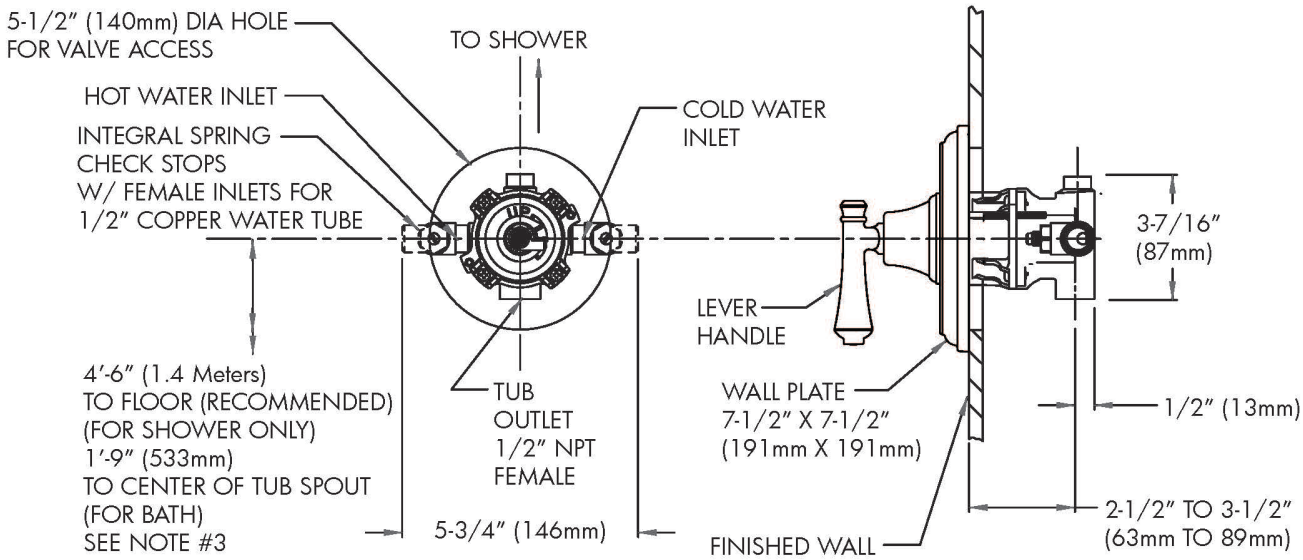

Architect/Engineer Approval Space:

P: 800-537-2107
W: WWW.SPEAKMAN.COM
R: DECEMBER 2022

Management Systems Registered to ISO 9001