REV	DESCRIPTION	BY DATE	APPD
F	REVISED AND REDRAWN PER ECR-ER1655	ANG CT 12/05/06	PSM 12/05/06

NOTES: UNLESS OTHERWISE SPECIFIED

1. FOR GENERAL SERIES SPECIFICATIONS, SEE SD22-0000.

2. MATERIAL SPECIFICATIONS:
   BODY: BRASS PER ASTM B16
   SPRING WASHER: PHOSPHOR BRONZE PER ASTM B103
   CLIP RING: BERYLLIUM COPPER PER ASTM B194

3. FINISH SPECIFICATIONS:
   BODY: .000030 MIN. GOLD PER ASTM B488 OVER
   .000080 MIN. NICKEL PER AMS-QQ-N-290
   SPRING WASHER:.000005 MIN. GOLD PER ASTM B488 OVER
   .000080 MIN. PER AMS-QQ-N-290
   CLIP RING: .000100 MIN. NICKEL PER AMS-QQ-N-290 OVER
   COPPER FLASH PER ASTM B734

4. ELECTRICAL SPECIFICATIONS:
   CURRENT RATING: 40AMPS

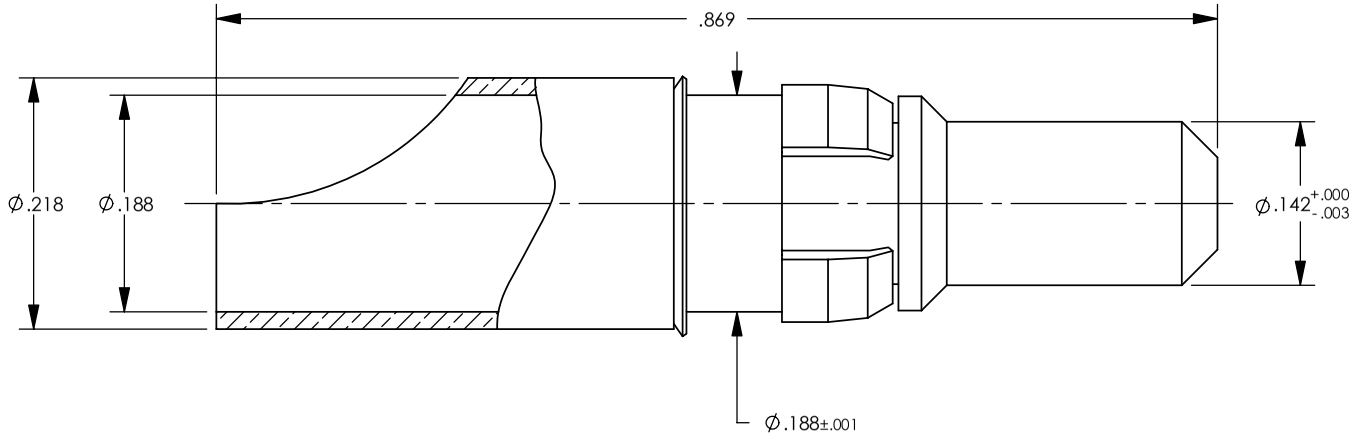

CATALOG P/N: 220-510-0000G

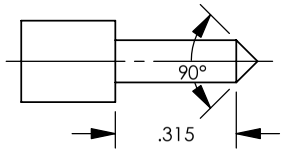

CABLE TRIM DIMENSIONS

PER ASME Y14.5M-1994
UNLESS OTHERWISE SPECIFIED:
DIMENSIONS ARE IN INCHES [MM]
TOLERANCES:
DECIMAL: .XX [X.X] ± .01 [0.254
.XXX [X.XX] ± .005 [0.127]
ANGLES: ± 2° SCALE: 6:1

CUSTOMER DRAWING

DRAWN	DATE	APPROVED	DATE
JWH	05/02/00	JED	05/03/00
APPROVED	DATE	APPROVED	DATE
JMC	05/03/00	KJT	05/03/00

WinchesterElectronics
Winchester Electronics Corporation
62 Barnes Industrial Road North
Wallingford, Connecticut 06492

RDM PLUG, HIGH POWER

A | SD220-510-0000G | SHT 1 OF 1 | REV F

June 2006 - This drawing became the property of Winchester Electronics Corporation, Wallingford, CT.