Assembly Instructions
Medicine Cabinet

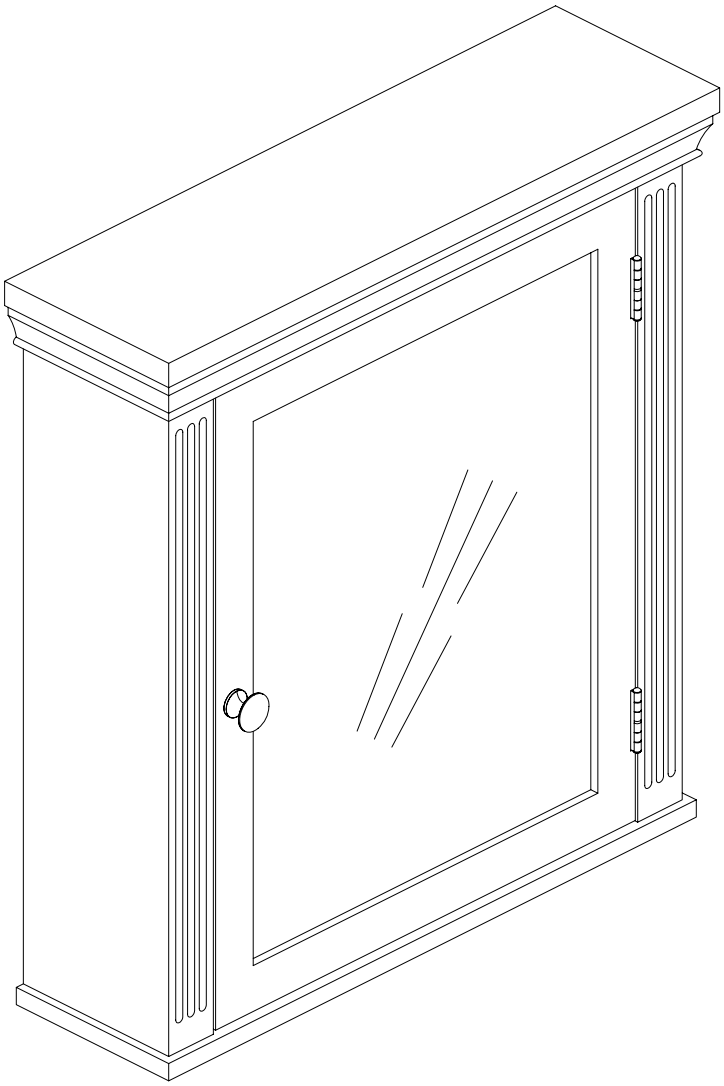

Please provide the following information when contacting for parts or questions: the name of the company you purchased from,the tracking number of the original package, and the original order date.

We offer free replacements for 1 year (purchase verification required). This replacement policy does not cover used/previously returned product or products sold by unauthorized third party vendors.

ASSEMBLY INSTRUCTIONS - IMPORTANT

Carefully unpack & identify each component before attempting to assemble. Refer to parts list. Please take care when assembling the unit and always set the parts on a clean,soft surface.If you require any assistance with assembly,parts,please call the company you place order with or please email to:service@eleganthf.net.

INSTRUCCIONES PARA ARMAR - IMPORTANTE :

Desempaque cuidadosamente e identifique cada componente antes de tratar de empezar su ensambladura.Verifique la lista de partes. Por favor tenga cuidado cuando arme la unidad y siempre coloque las piezas sobre una superficie plana, suave y limpia. Si necesita ayuda con el armado, envie un correo electzórico a service@eleganthf.net.

DIRECTIVES DE MONTAGE-IMPORTANT:

Avant de commencer l' assemblage,déballez délicatement toutes les pièces et repérez-les sur la liste des pièces. Procédez avec soins durant l' assemblage et posez toujours les pièces sur une surface proper, douce et lisse. Sie vouo plait e-mail á service@eleganthf.net.

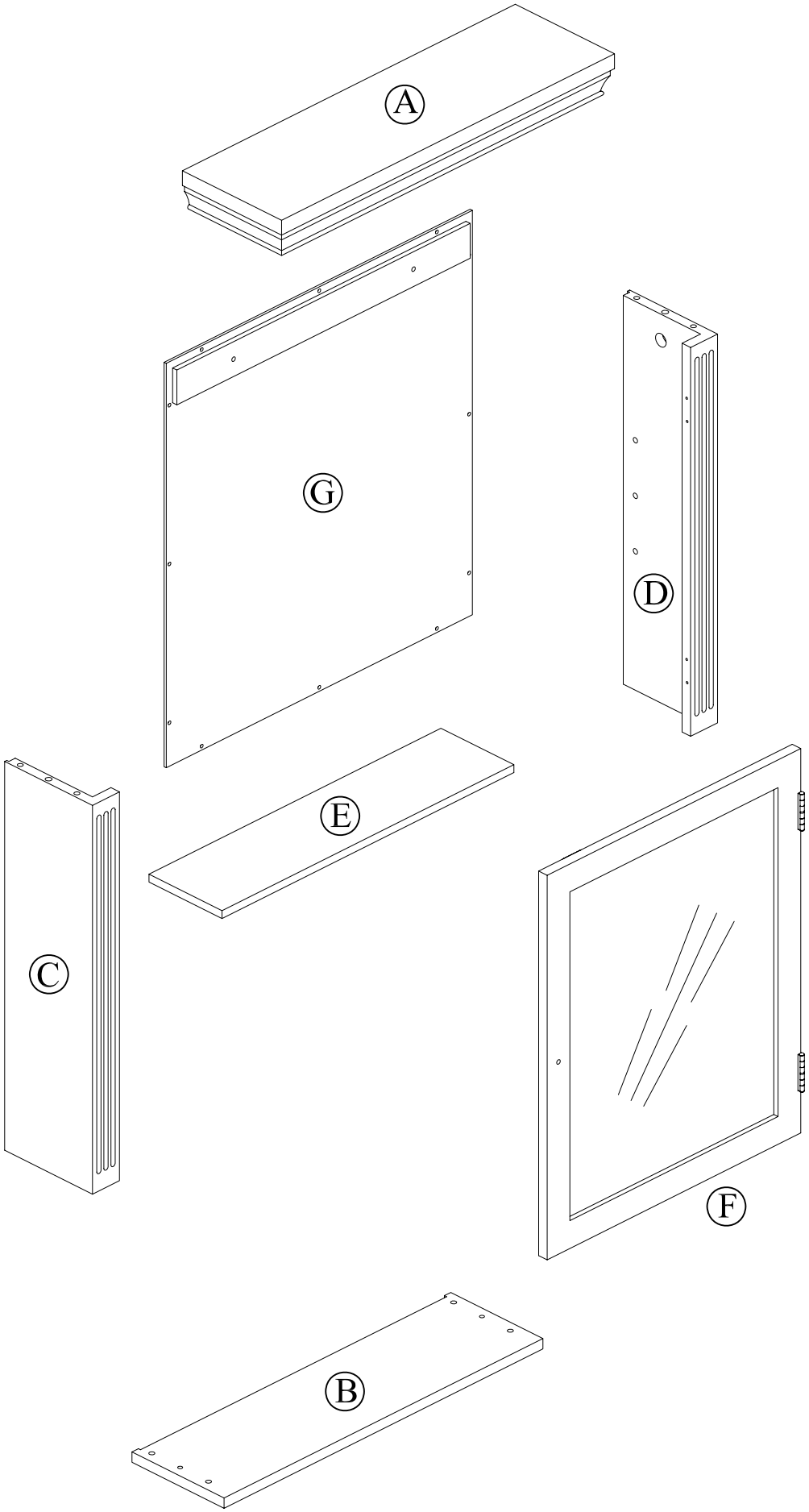
A
G
D
E
C
F
B

COMPONENTS

PART	FIGURE	DESCRIPTION	QTY	PART	FIGURE	DESCRIPTION	QTY
A	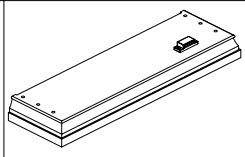	TOP SHELF	1PC	E	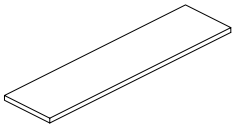	ADJUSTABLE SHELF	1PC
B	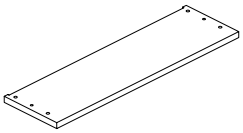	BOTTOM SHELF	1PC	F	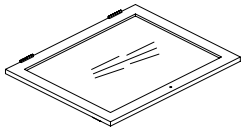	DOOR	1PC
C	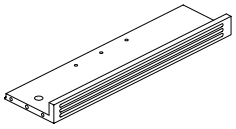	SIDE PANEL-LEFT	1PC	G	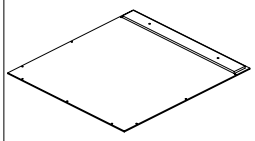	REAR PANEL	1PC
D	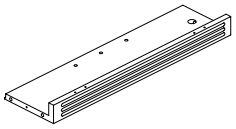	SIDE PANEL-RIGHT	1PC				

HARDWARE & TOOLS

PART	FIGURE	DESCRIPTION	QTY	PART	FIGURE	DESCRIPTION	QTY
1		WOODEN DOWEL	8PCS	6	Ø3*15 mm	SCREW	4PCS
2		PIN	2PCS	7		KNOB & BOLT	1SET
3		CAM LOCK	2PCS	8	Ø3*12 mm	SCREW	12PCS
4		CAM LOCK CAP	2PCS	9		SHELF PIN	4PCS
5		GLUE	1PC	10	Ø4*50mm	SCREW	4PCS
				11		ANCHOR	2PCS

TOOL NEEDED:

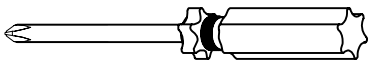

PHILIPS SCREWDRIVER REQUIRED - NOT INCLUDED

SUGGESTION:

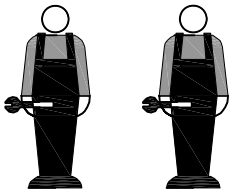

TWO PEOPLE FOR ASSEMBLING

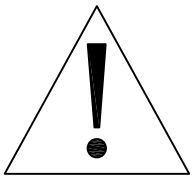

WARNINGS:

1. DO NOT LET ANY SHARP OBJECTS TOUCH OR RUB THE SURFACE OF THE PRODUCT.
2. WHEN ASSEMBLING, DO NOT LET CHILDREN PLAY AROUND THE WORKING AREA.
3. PLEASE CONFIRM ALL PARTS ARE CORRECT BEFORE STARTING THE ASSEMBLY PROCESS.
4. DO NOT TIGHTEN ALL BOLTS AND SCREWS COMPLETELY UNTIL THE ENTIRE UNIT HAS BEEN ASSEMBLED AND SET UP.

1

1

8pcs

2

2pcs

5

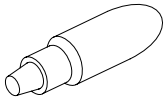

1pc

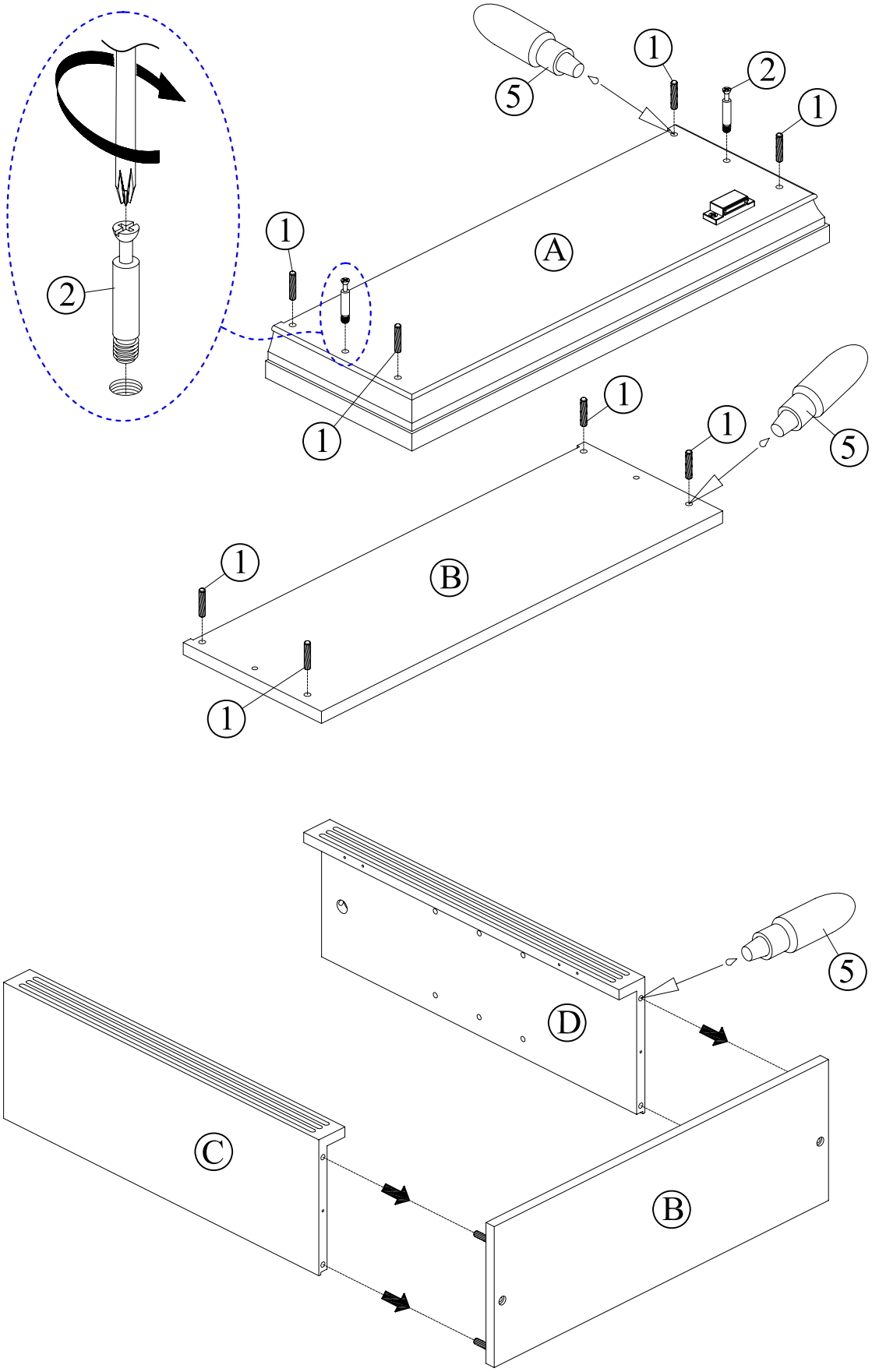

STEP 1:

1. Fill dowel hole half way with Glue #5.
   Wooden Dowel #1 may push out excess glue-wipe off excess glue.
2. Insert the Wooden Dowel #1 and the Pin #2 into the hole on the Top Shelf A,tighten the Pin #2.
3. Insert the Wooden Dowel #1 into the hole on the Bottom Shelf B.
4. Connect the Side Panel-Left C and the Side Panel-Right D to the Bottom Shelf B with Wooden Dowel #1.

2

10

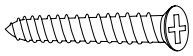

Ø4*50mm

2pcs

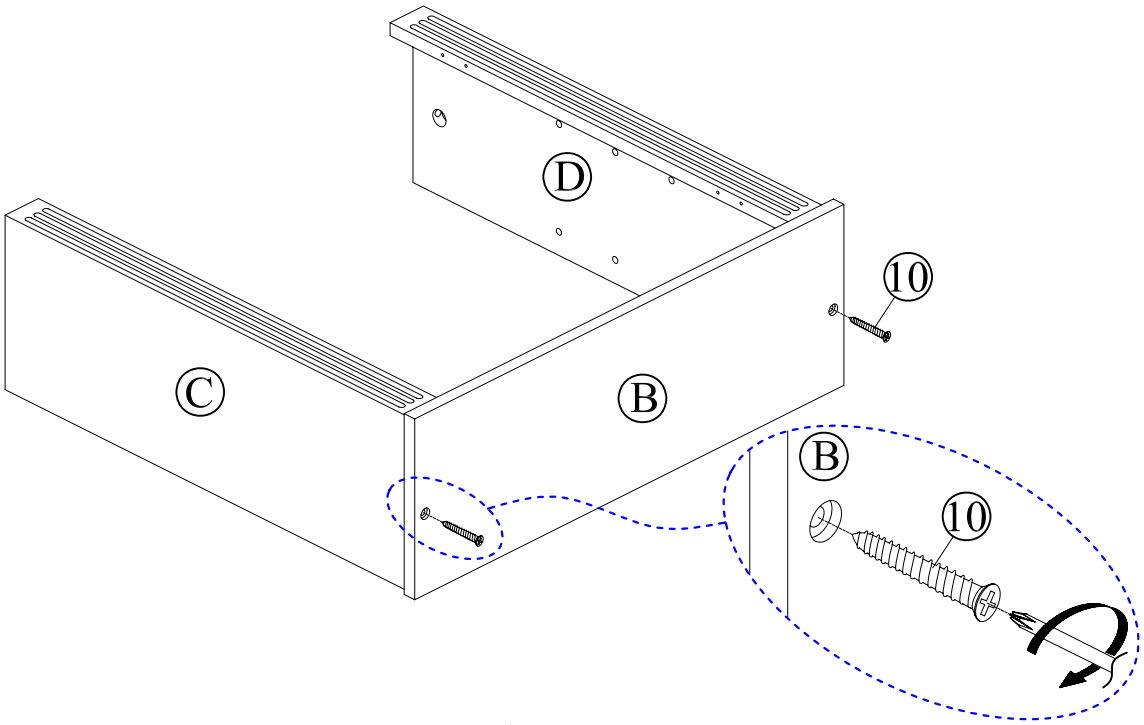

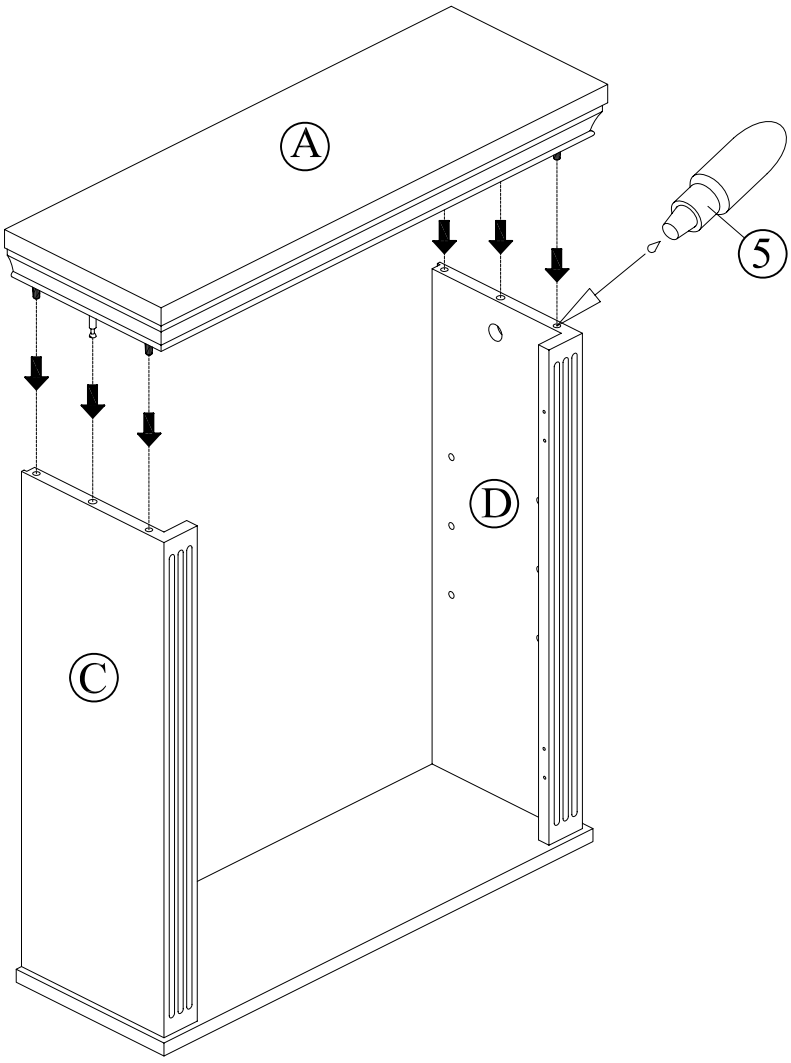

STEP 2:

1. Insert the Screw #10 into the hole on the Bottom Shelf B,tighten the Screw #10.
2. Fill dowel hole half way with Glue #5.
   Wooden Dowel #1 may push out excess glue-wipe off excess glue.
3. Connect the Top Shelf A to the Side Panel-Left C and the Side Panel-Right D with Wooden Dowel #1 and the Pin #2.

3

3

2pcs

4

2pcs

9

4pcs

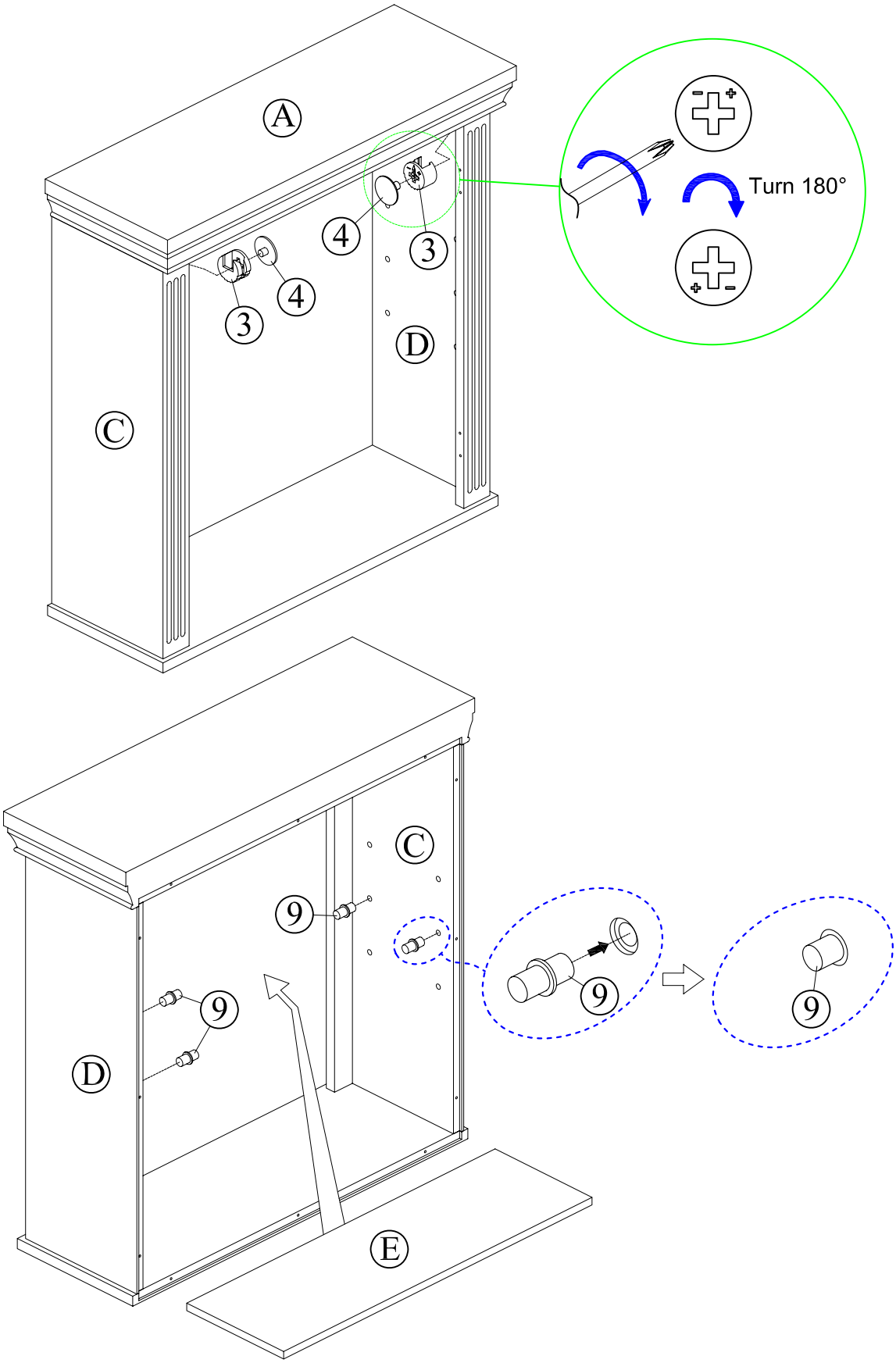

STEP 3:

1. Insert the Cam Lock #3 into the hole on the Side Panel-Left C and the Side Panel-Right D, tighten the Cam Lock #3 to the Pin #2, insert the Cam Lock Cap #4 when finish.
2. Insert the Shelf Pin #9 into the hole on the Side Panel-Left C and the Side Panel-Right D.
3. Placed the Adjustable Shelf E on the Shelf Pin #9.

4

6

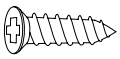

Ø3*15 mm

4pcs

8

Ø3*12 mm

12pcs

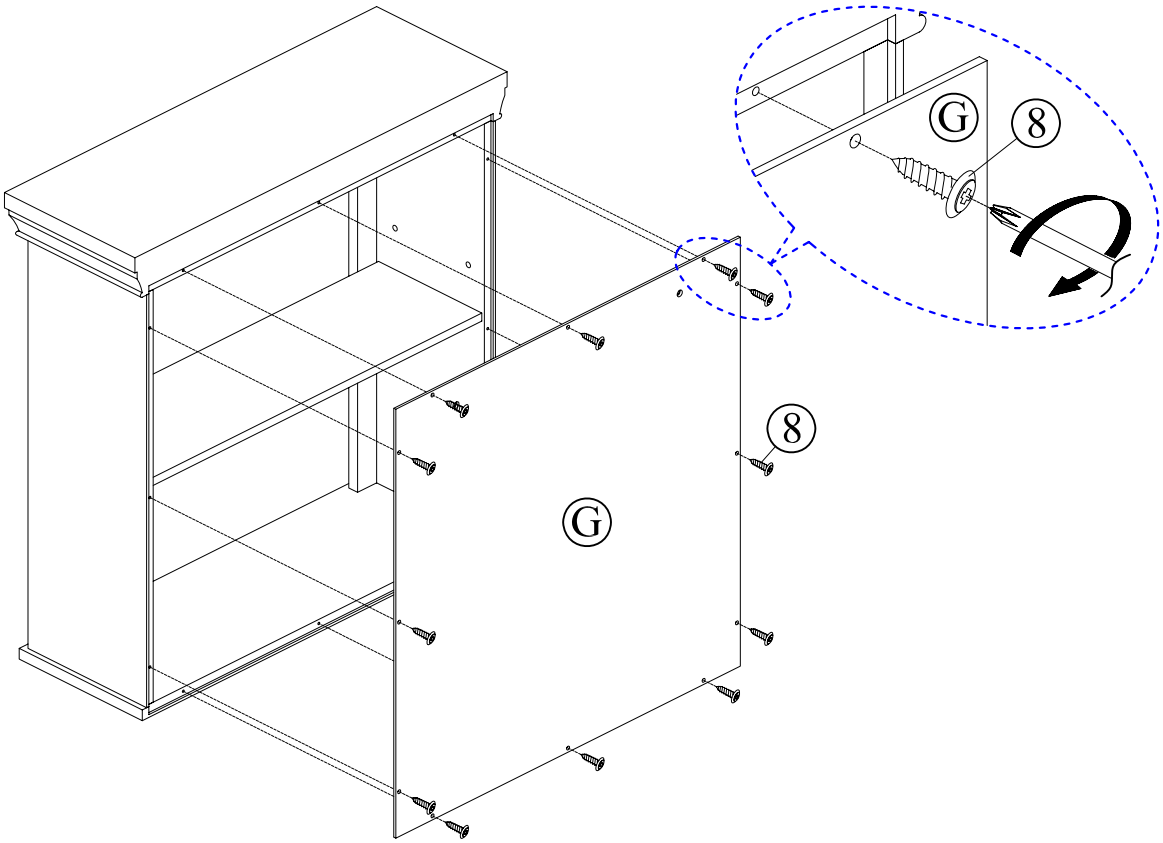

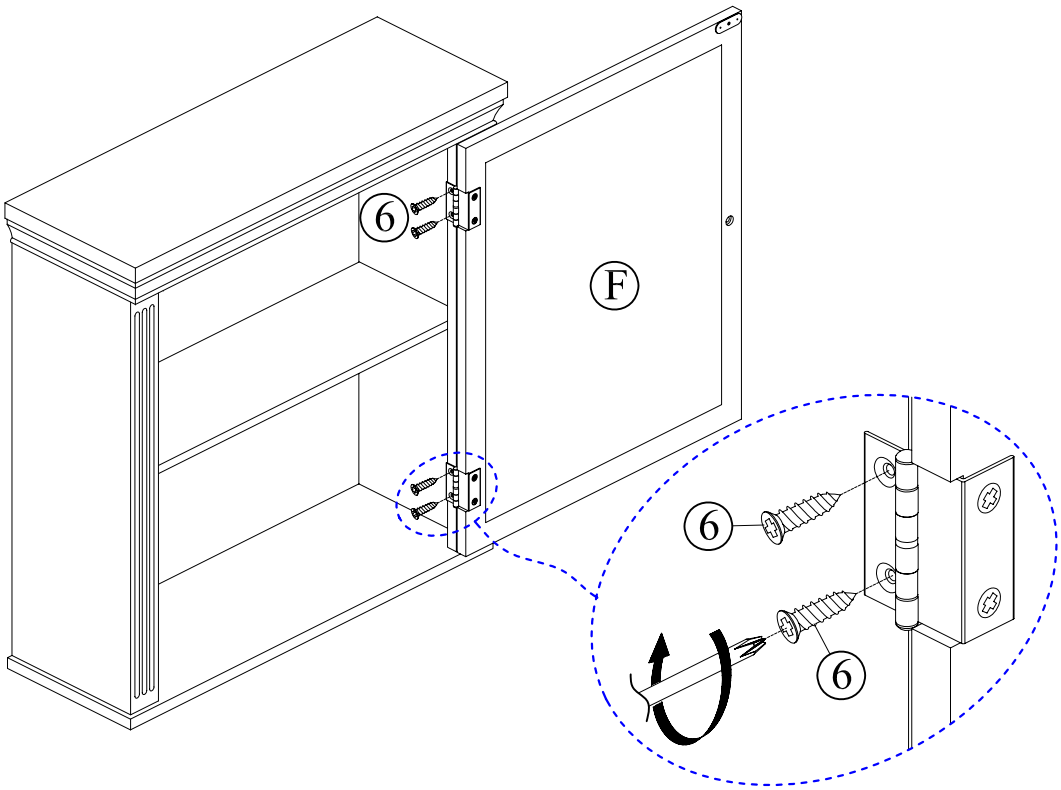

STEP 4:

1. Connect the Rear Panel G and the main body with the Screw #8,tighten the Screw #8.
2. Connect the Door F and the Side Panel-Right D with the Screw #6, insert the Screw #6 into the hole on the Side Panel-Right D,and the Screw #6 pass through the hole on the Hinge, then tighten the Screw #6.

5

7

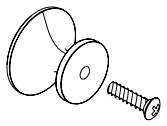

1 set

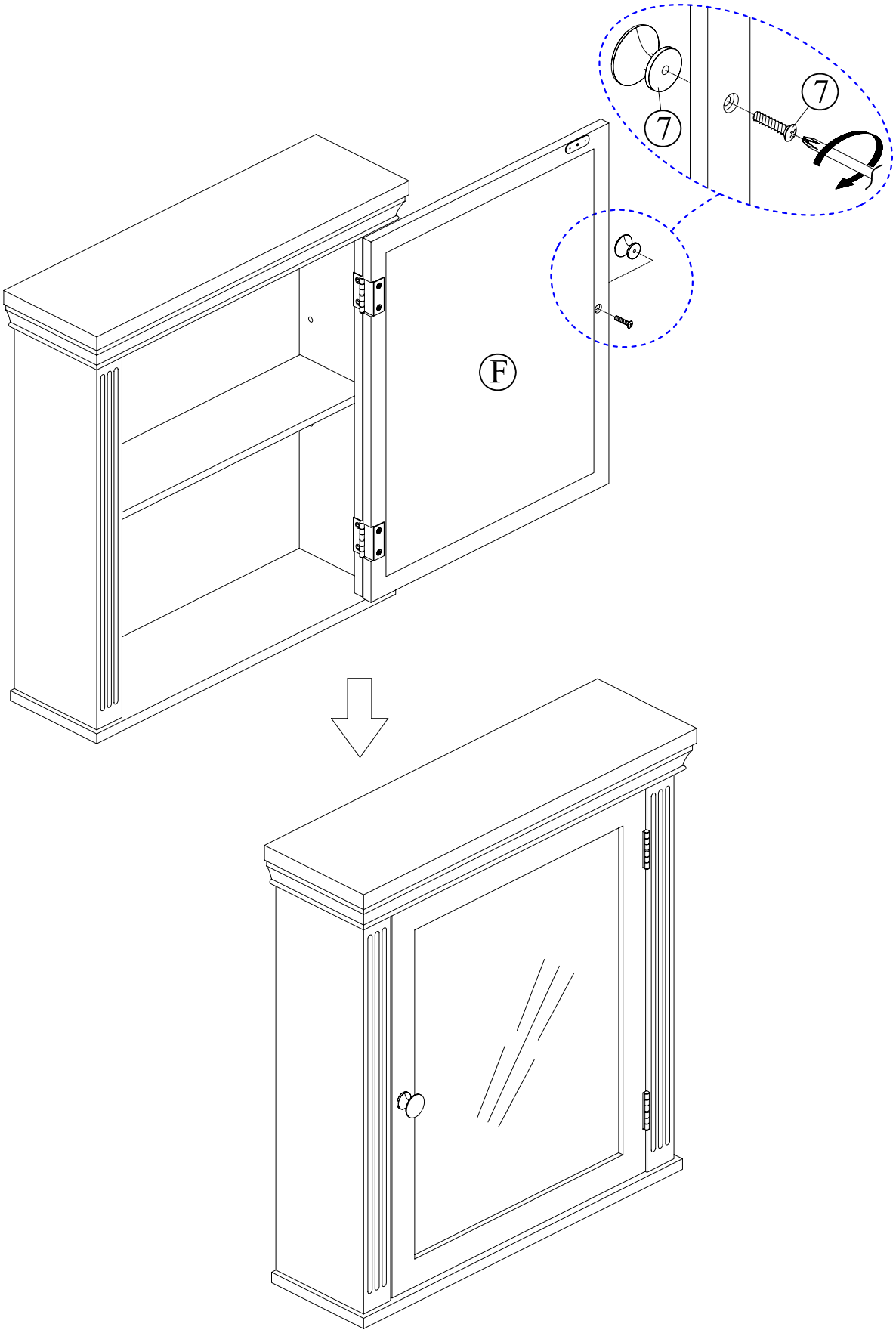

STEP 5:

1. Attach the Knob #7 to the Door F with the Bolt #7,then tighten the Bolt #7.

6

10

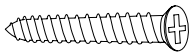

Ø4*50mm

2pcs

11

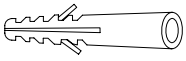

2pcs

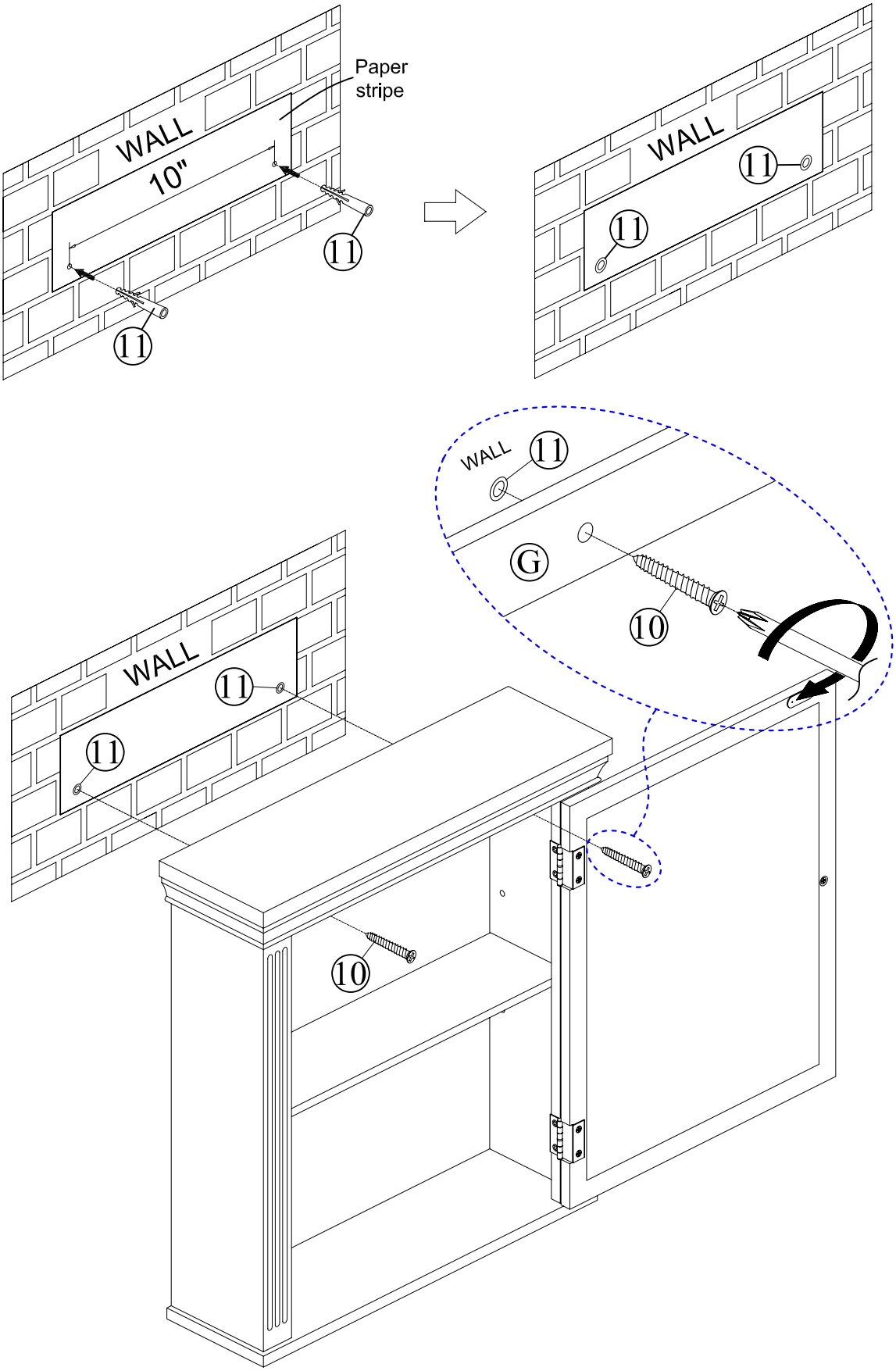

STEP 6:

1. We provide Alignment Paper Strip to help you to install the Medicine Cabinet on the wall. Place Alignment Paper on the desire location and make sure it is horizontal. Pre-drill anchor holes,and install anchor #11.
2. Against the Medicine Cabinet on the wall,then aimed the hole on the Rear Panel G and the Anchor #11 in the wall.
3. Tighten the screw #10 into the Anchor #11,and pass through the hole on the Rear Panel G. In this way, the Medicine Cabinet shall be fixed on the wall.

California Proposition 65 Warning

WARNING: This product may contains chemicals known to the state of california to cause cancer,and birth defects or other reproductive harm.

ADVERTENCIA: Este producto puede contener sustancias químicas conocidas en el estado de california como causantes de cáncer,defectos de nacimiento u otros daños reproductivos.

For more information: https://oehha.ca.gov/proposition-65

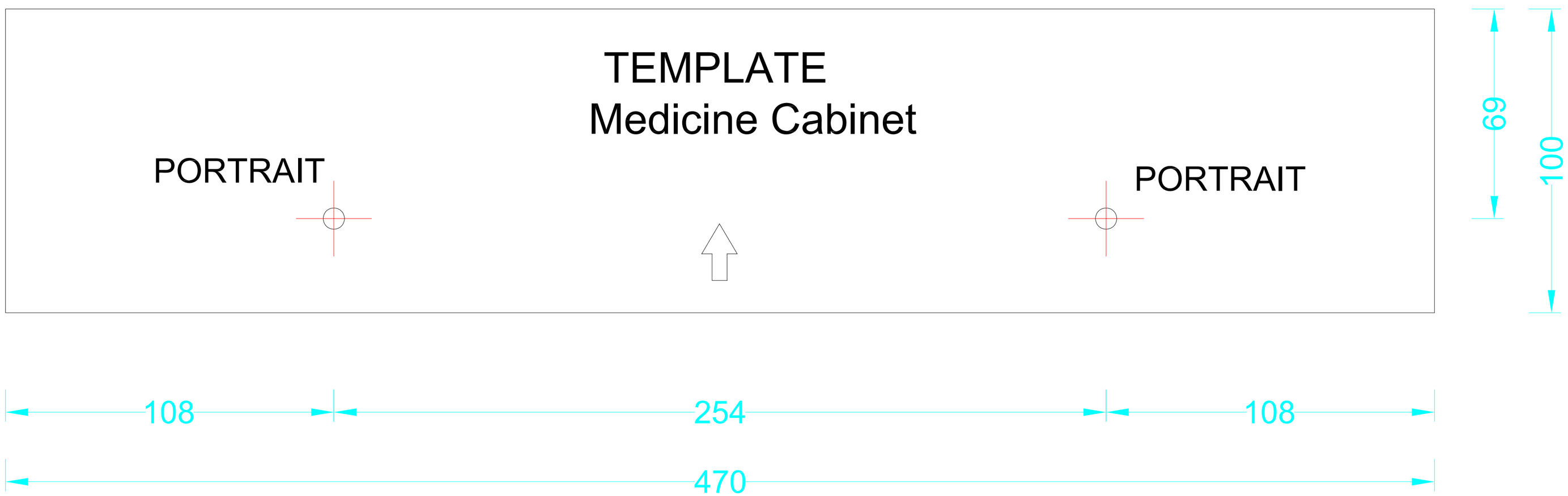
TEMPLATE
Medicine Cabinet
PORTRAIT
PORTRAIT
69
100
108
254
108
470