TOWNSEND DRESSER MIRROR
ASSEMBLY INSTRUCTIONS

MODUS FURNITURE

BOX DRESSER MIRROR

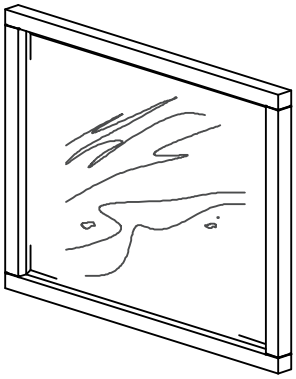

BOX DRESSER 8 DRAWER*

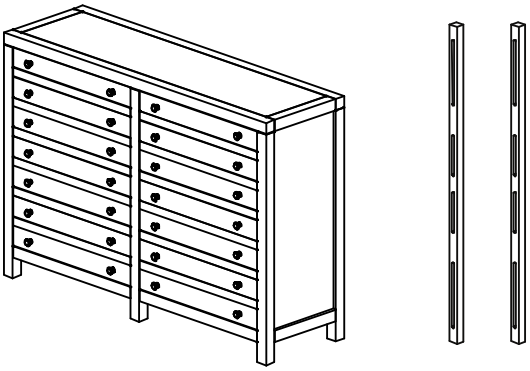

***SOLD SEPARATELY**

OPTION 1
WALL MOUNTING

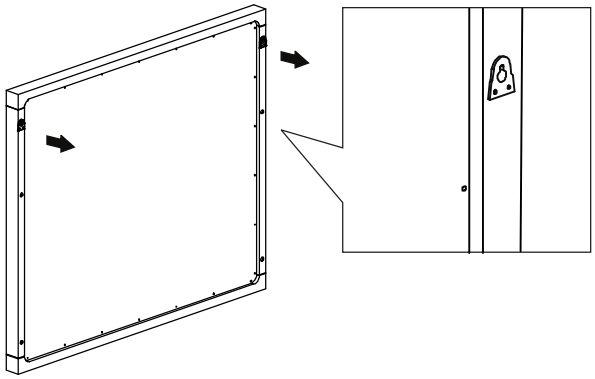

HARDWARE PACKED IN BOX DRESSER 8 DRAWER

1	ALLEN BOLT (6X40mm)		8 PCS
2	SPRING WASHER (M6)		8 PCS
3	FLAT WASHER (M6)		8 PCS
4	ALLEN KEY (L4)		1 PC

OPTION 2
DRESSER MOUNTING

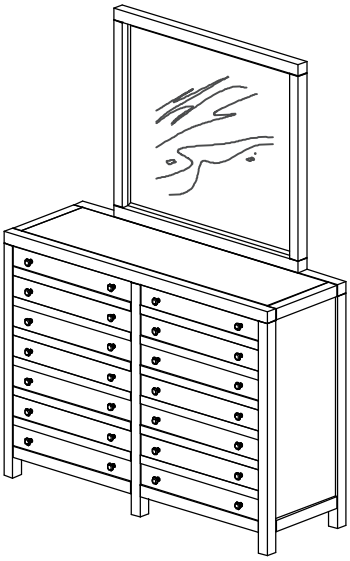

STEP 1 :

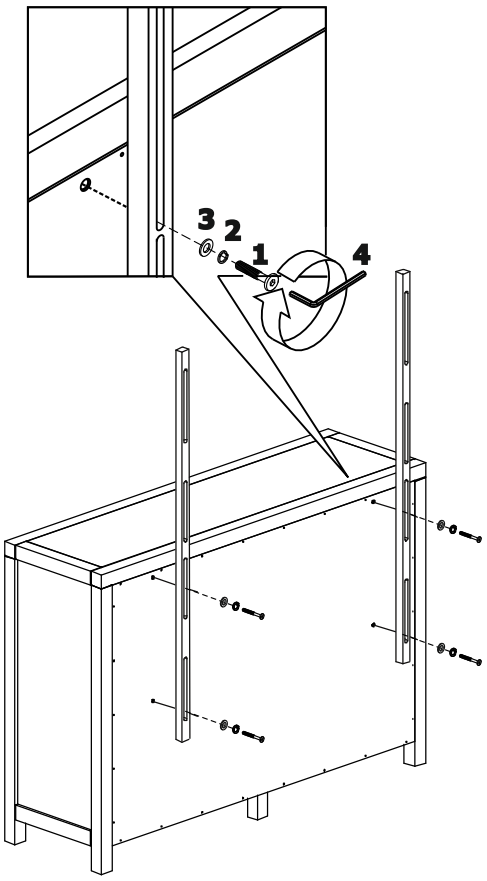

STEP 2 :

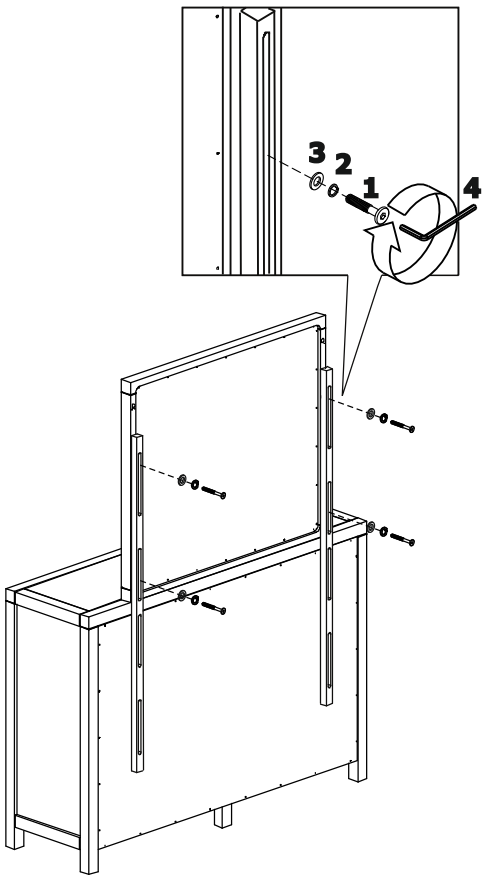

UPDATED : MARCH 19TH, 2020