KS8320,1,7,8DX
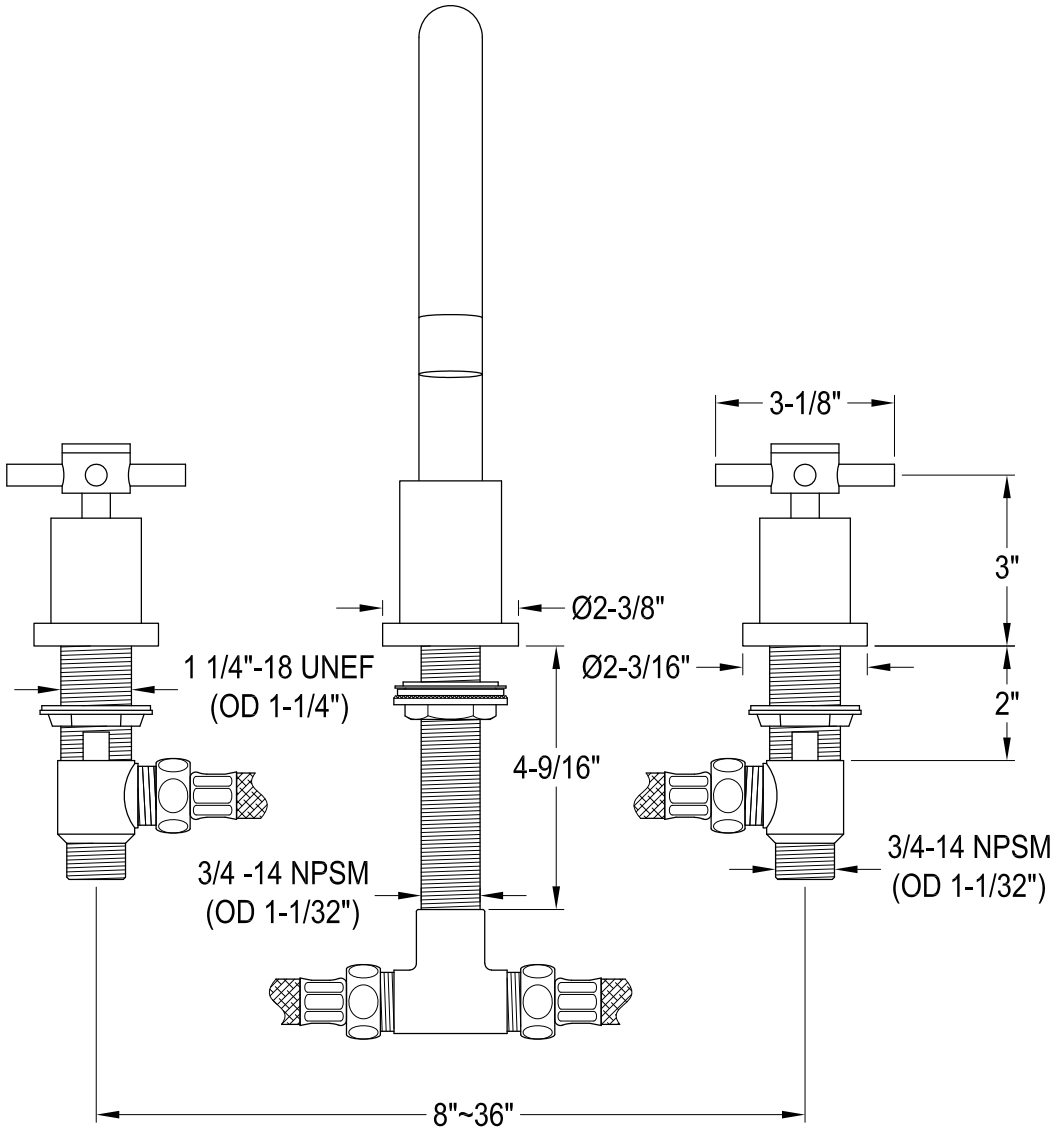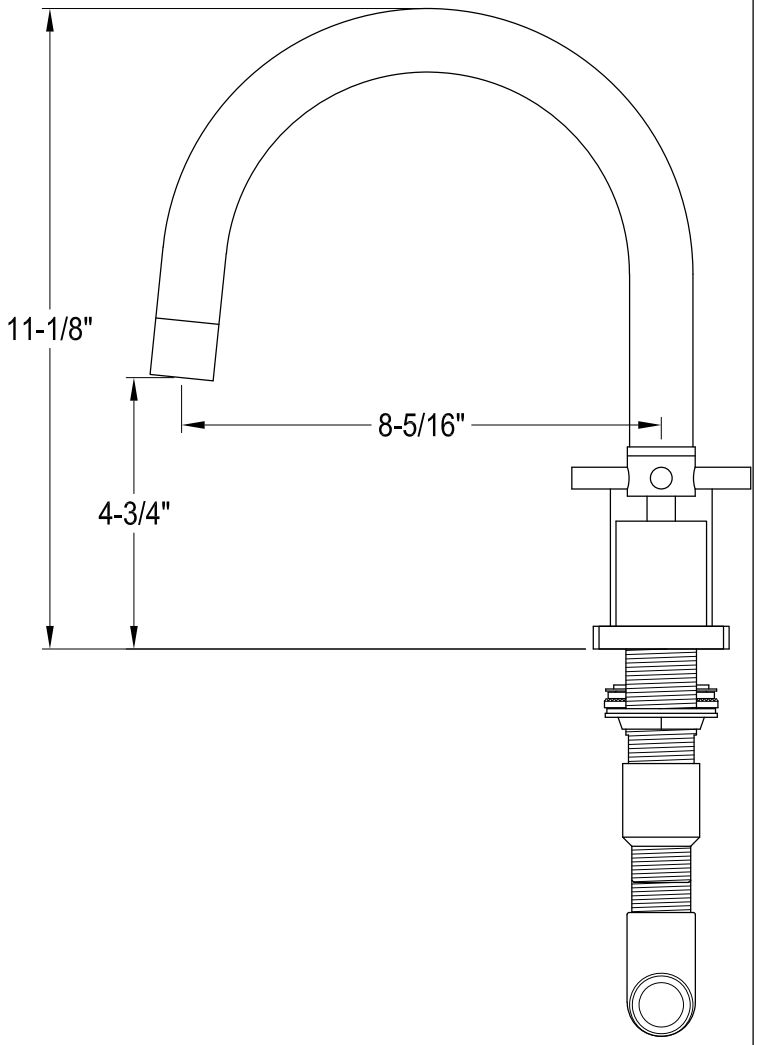
Roman Tub Filler