KS4641HX
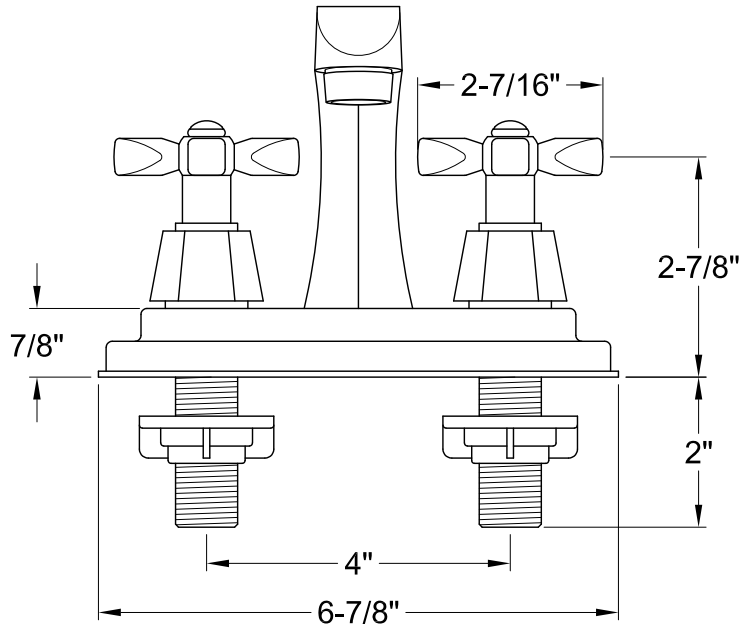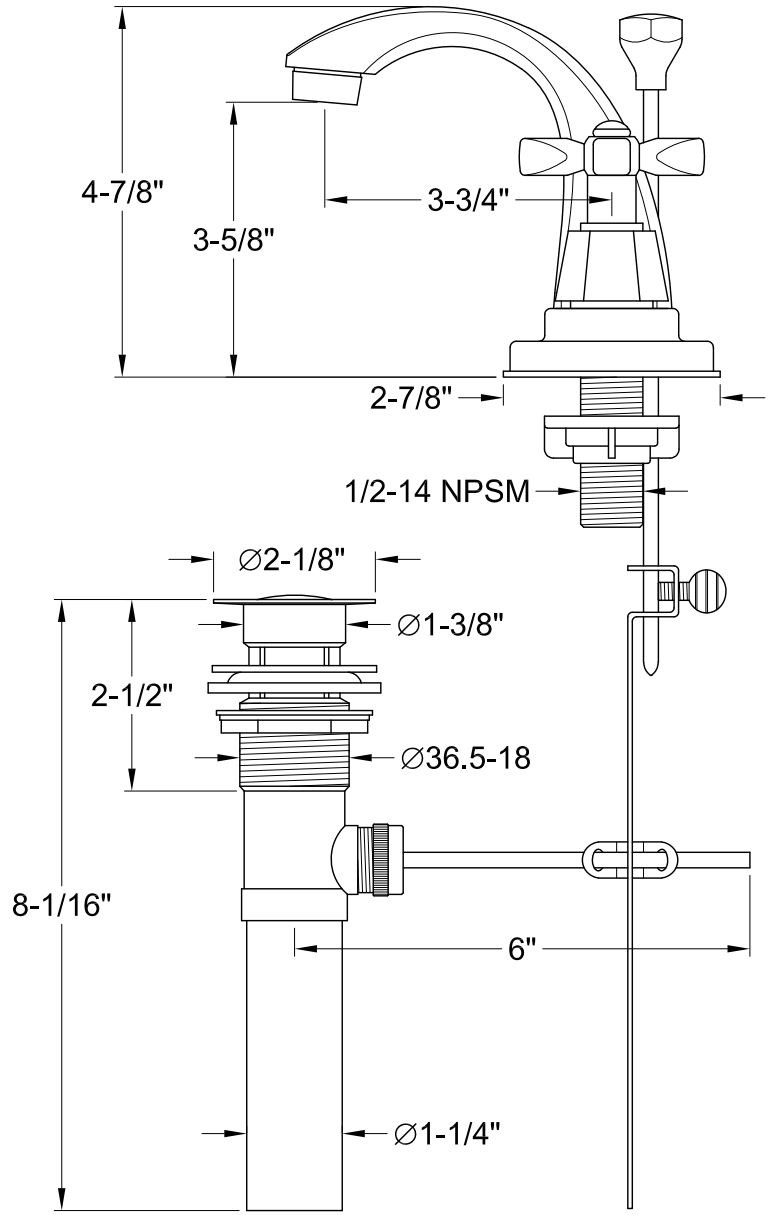
Twin Handles 4" Centerset Lavatory Faucet With Brass Pop-Up