KS1210,1,2,3,5,6,7,8BEX
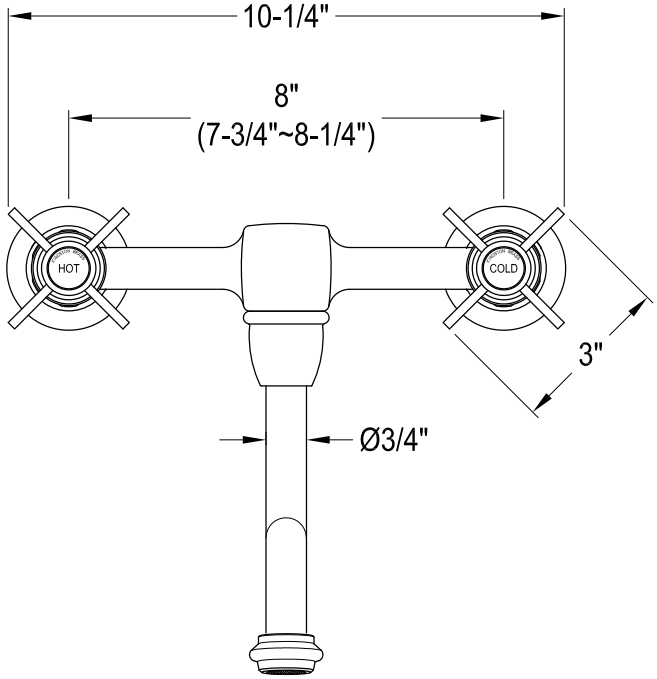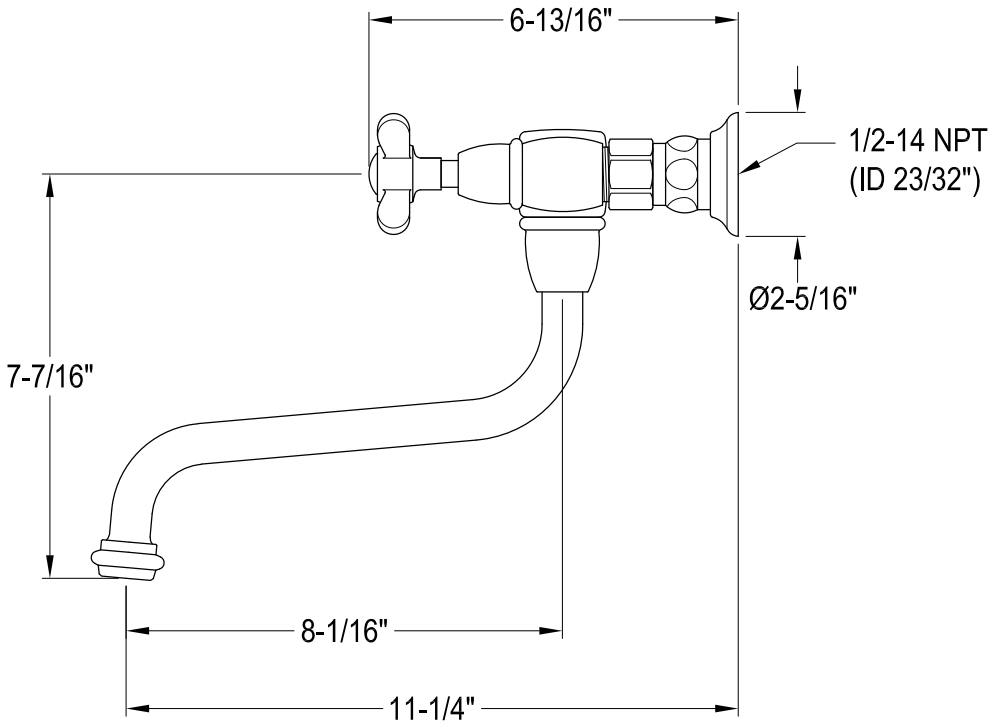
Twin Handles Wall Mount Bathroom Faucet