Parts:

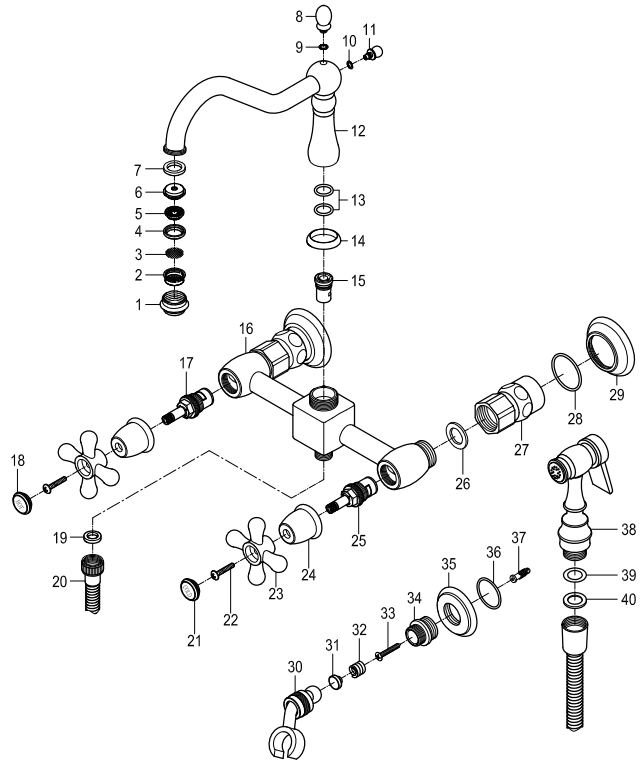

Replacement Parts:

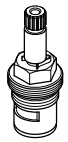

Hot Cartridge: KSRP1291HC

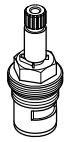

Cold Cartridge: KSRP1291CC

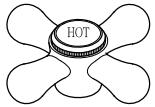

Hot Handle: KSH1161AXH

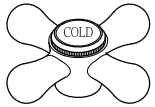

Cold Handle: KSH1161AXC

KINGSTON
KITCHEN & BATH

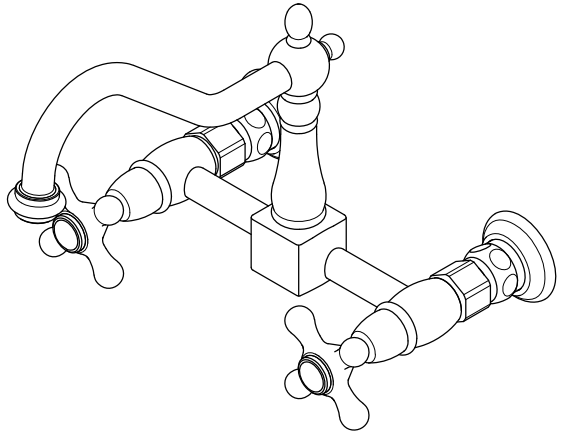

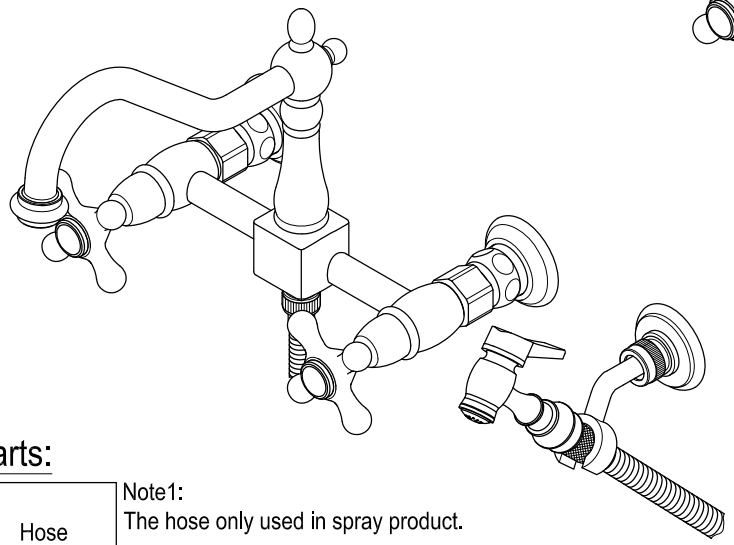

Parts:

Hose	
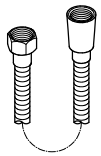 1 Pc	

Note1:
The hose only used in spray product.

www.kingstonbrass.com
TOLL-FREE CUSTOMER SERVICE: 1-877-2-KBRASS
TECHNICAL SUPPORT E-mail: service@kingstonbrass.com
12775 Reservoir Street, Chino, CA 91710

CARE AND MAINTENANCE OF YOUR FAUCET

Your Kingston Brass faucet has been finished to the most strict standards; however, due to the high content of minerals in the water, your finish may appear dull and tarnished after time. These are some do's and don'ts to maintain the luster on your faucet for many years to come.

DO
1. Use a silicon based caulking when installing.
2. Clean your faucet with only a mild soap and water solution.
3. Dry your faucet after using it.
4. Give it a coat of Carnauba Wax periodically.

DON'T
1. Use plumbers putty when installing the faucet.
2. Use any abrasive cleaning agents.

It may seem like a very simple and short list but it is that simple to maintain your faucet, looking shiny and new.

If your faucet is already looking somewhat dull and tarnished, before replacing it, try cleaning it with a 50/50 solution of vinegar and water, you may need to soak some rags and wrap around those stubborn areas, leave overnight and rinse completely in the morning, apply Carnauba wax once you have removed the mineral deposits.

NOTICE

Failure to follow all directions may cause leaks which may result in water damage

⚠CAUTION

Failure to follow all installation directions may cause product to detach from the wall and cause serious injury

KINGSTON
KITCHEN & BATH

INSTALLATION INSTRUCTIONS
Twin Handles Wall Mount Kitchen Faucet with or without Sprayer

Need Tools:

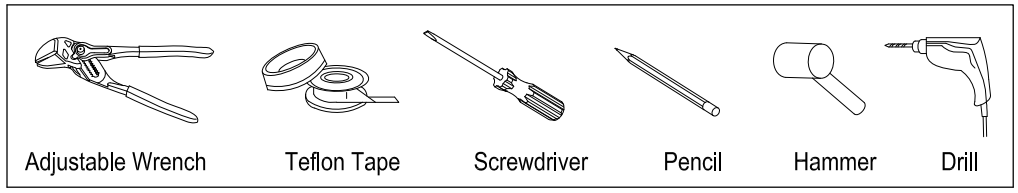

BEFORE BEGINNING INSTALLATION:

1. Flush plumbing lines to clear any debris.
2. Shut off both supply lines after flushing.

1

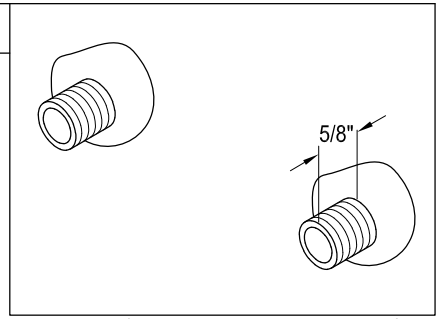

1. Plumb a 1/2"-14 NPT nipple protruding from the finished wall 5/8".

2

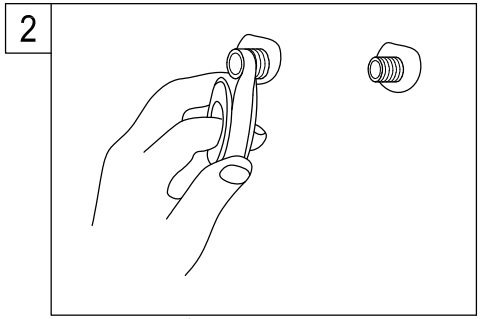

2. Turn on old faucet to remove any excess water in the supply lines. Apply Teflon tape onto both threads of supply elbows.

3

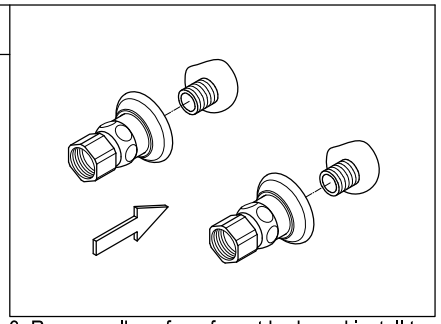

3. Remove elbow from faucet body and install to water outlet on wall.

4

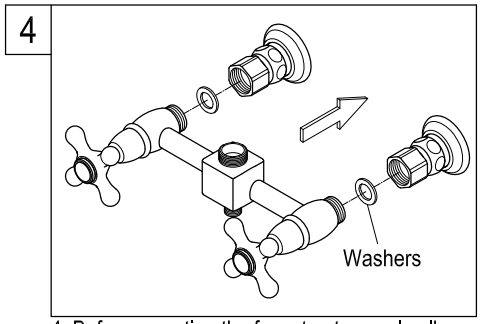

4. Before mounting the faucet onto supply elbows, apply small black washers onto both water inlets of faucet.

5

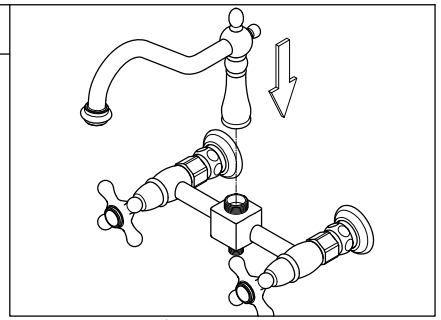

5. Install spout to faucet body and tighten it.

6

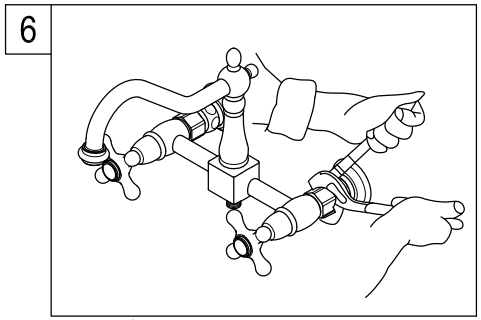

6. Install faucet body to supply elbows and tighten the elbow with an adjustable wrench.

7

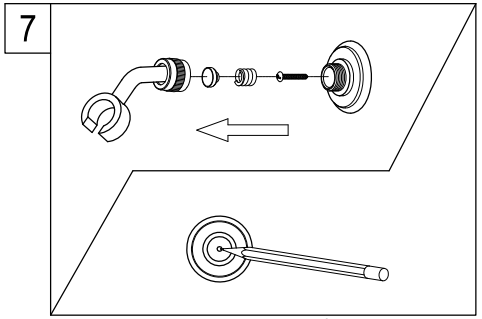

7. Remove sprayer hook ring from sprayer set and aim to required position on wall.
Mark the center hole with marker.

8

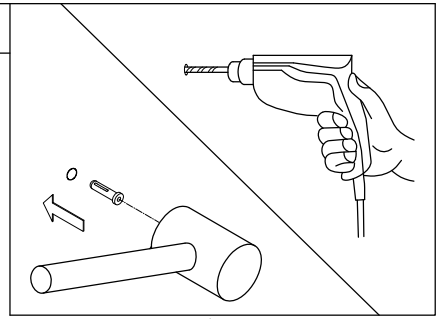

8. Insert anchor nut after hole drilling.
(The size of the hole, anchor and screw must be properly proportional)

9

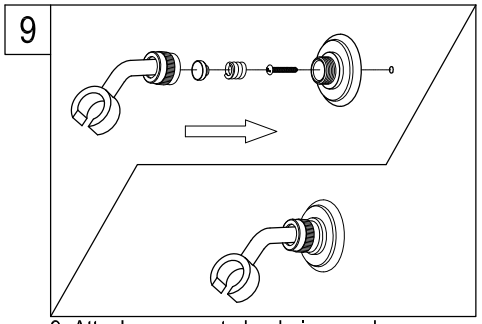

9. Attach screw onto hook ring as shown.

10

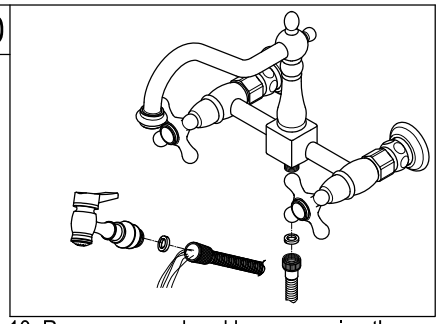

10. Remove spray head by unscrewing the sprayer in a counter clockwise direction, turn on both hot and cold valves and let water run for at least one minute, this will clear any debris left in the line.

11

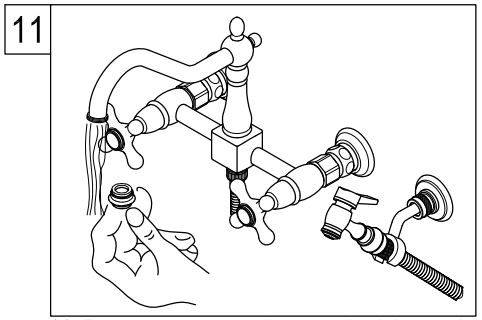

11. Remove aerator and turn on both hot and cold valves, let water run for at least one minute, this will clear any debris left in the line, reinstall aerator.

© 2024-02-T Kingston Brass