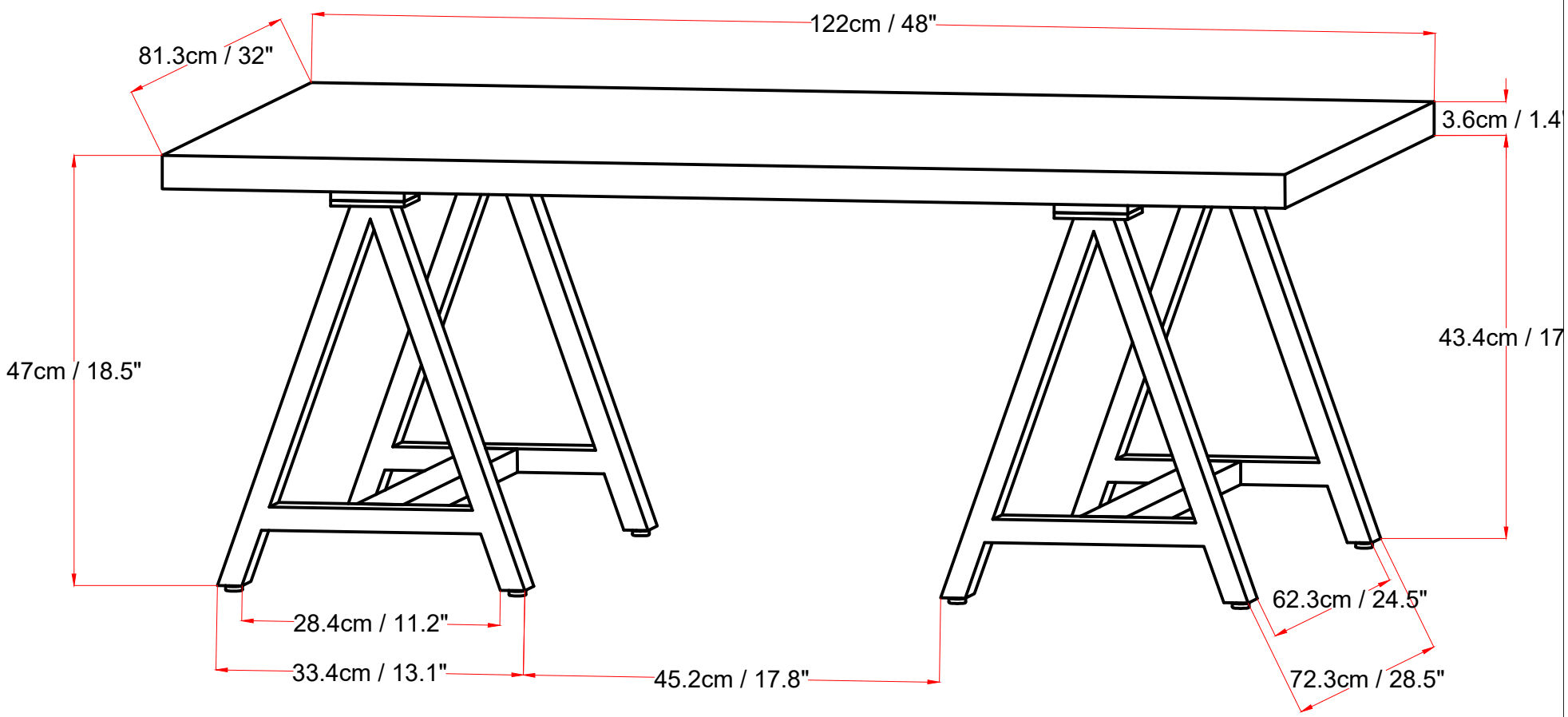

Net Weight : 61.54 (lb)