Assembly Instructions
Corner Floor Cabinet

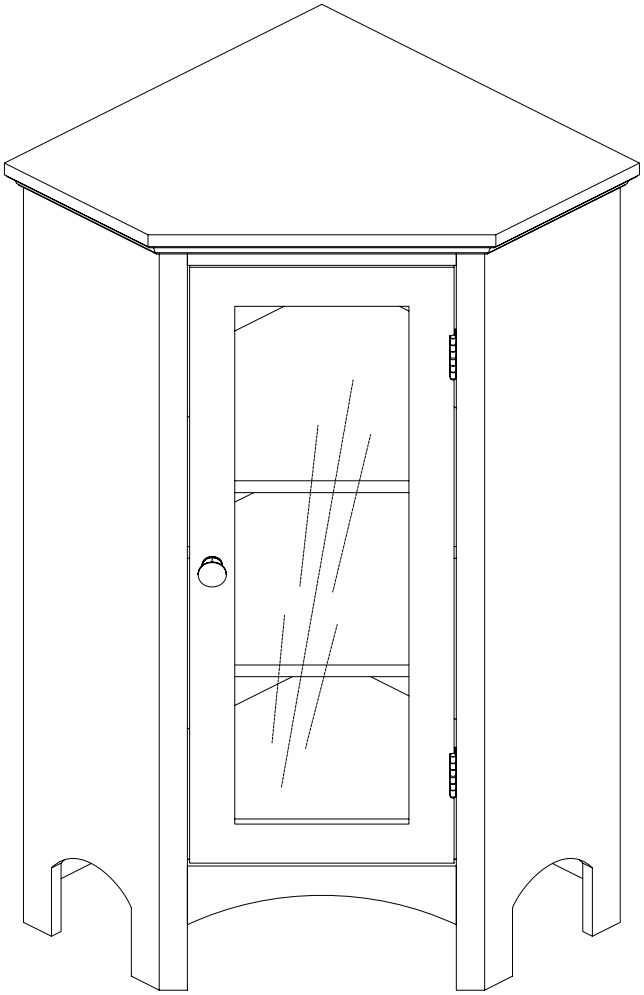

Please provide the following information when contacting for parts or questions: the name of the company you purchased from,the tracking number of the original package, and the original order date.

ASSEMBLY INSTRUCTIONS - IMPORTANT

Carefully unpack & identify each component before attempting to assemble. Refer to parts list. Please take care when assembling the unit and always set the parts on a clean,soft surface.If you require any assistance with assembly,parts,please call the company you place order with or please email to:service@eleganthf.net.

INSTRUCCIONES PARA ARMAR - IMPORTANTE :

Desempaque cuidadosamente e identifique cada componente antes de tratar de empezar su ensambladura.Verifique la lista de partes. Por favor tenga cuidado cuando arme la unidad y siempre coloque las piezas sobre una superficie plana, suave y limpia. Si necesita ayuda con el armado, envie un correo electzórico a service@eleganthf.net.

DIRECTIVES DE MONTAGE-IMPORTANT:

Avant de commencer l' assemblage,déballez délicatement toutes les pièces et repérez-les sur la liste des pièces. Procédez avec soins durant l' assemblage et posez toujours les pièces sur une surface proper, douce et lisse. Sie vouo plait e-mail á service@eleganthf.net.

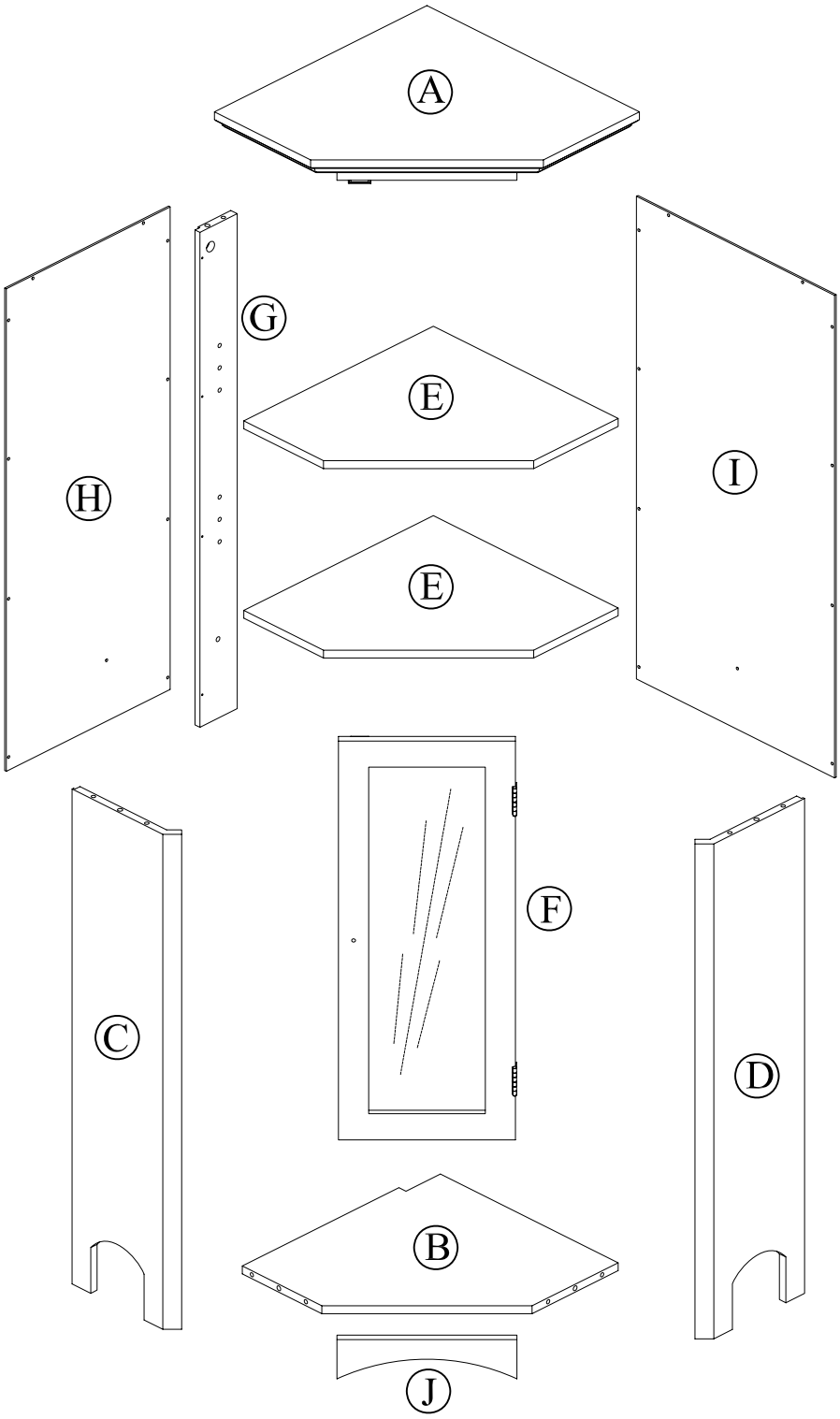
A
G
E
H
I
E
F
C
D
B
J

COMPONENTS

PART	FIGURE	DESCRIPTION	QTY	PART	FIGURE	DESCRIPTION	QTY
A	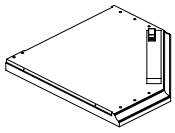	TOP SHELF	1PC	F	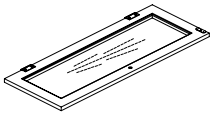	DOOR	1PC
B	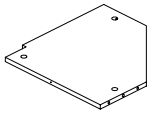	BOTTOM SHELF	1PC	G	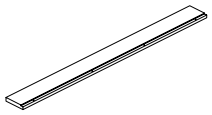	REAR RAIL	1PC
C	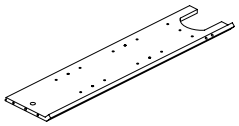	SIDE PANEL-LEFT	1PC	H	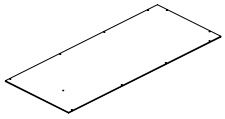	BACK LEFT PANEL	1PC
D	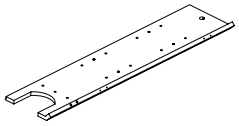	SIDE PANEL-RIGHT	1PC	I	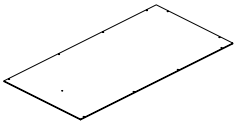	BACK RIGHT PANEL	1PC
E	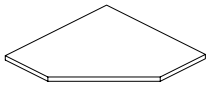	ADJUSTABLE SHELF	2PCS	J		FRONT LOWER RAIL	1PC

HARDWARE & TOOLS

PART	FIGURE	DESCRIPTION	QTY	PART	FIGURE	DESCRIPTION	QTY
1		WOODEN DOWEL	13PCS	6	Ø3*11 mm	SCREW	4PCS
2		PIN	6PCS	7		KNOB & BOLT	1SET
3		CAM LOCK	6PCS	8	Ø3*12 mm	SCREW	22PCS
4		CAM LOCK CAP	6PCS	9		SHELF PIN	10PCS
5		GLUE	1PC				

TOOL NEEDED:

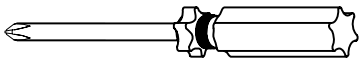

PHILIPS SCREWDRIVER REQUIRED - NOT INCLUDED

SUGGESTION:

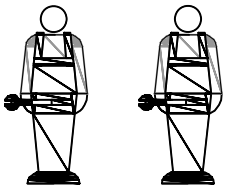

TWO PEOPLE FOR ASSEMBLING

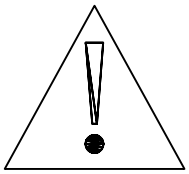

WARNINGS:

1. DO NOT LET ANY SHARP OBJECTS TOUCH OR RUB THE SURFACE OF THE PRODUCT.
2. WHEN ASSEMBLING, DO NOT LET CHILDREN PLAY AROUND THE WORKING AREA.
3. PLEASE CONFIRM ALL PARTS ARE CORRECT BEFORE STARTING THE ASSEMBLY PROCESS.
4. DO NOT TIGHTEN ALL BOLTS AND SCREWS COMPLETELY UNTIL THE ENTIRE UNIT HAS BEEN ASSEMBLED AND SET UP.

1

1

13pcs

2

6pcs

5

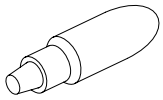

1pc

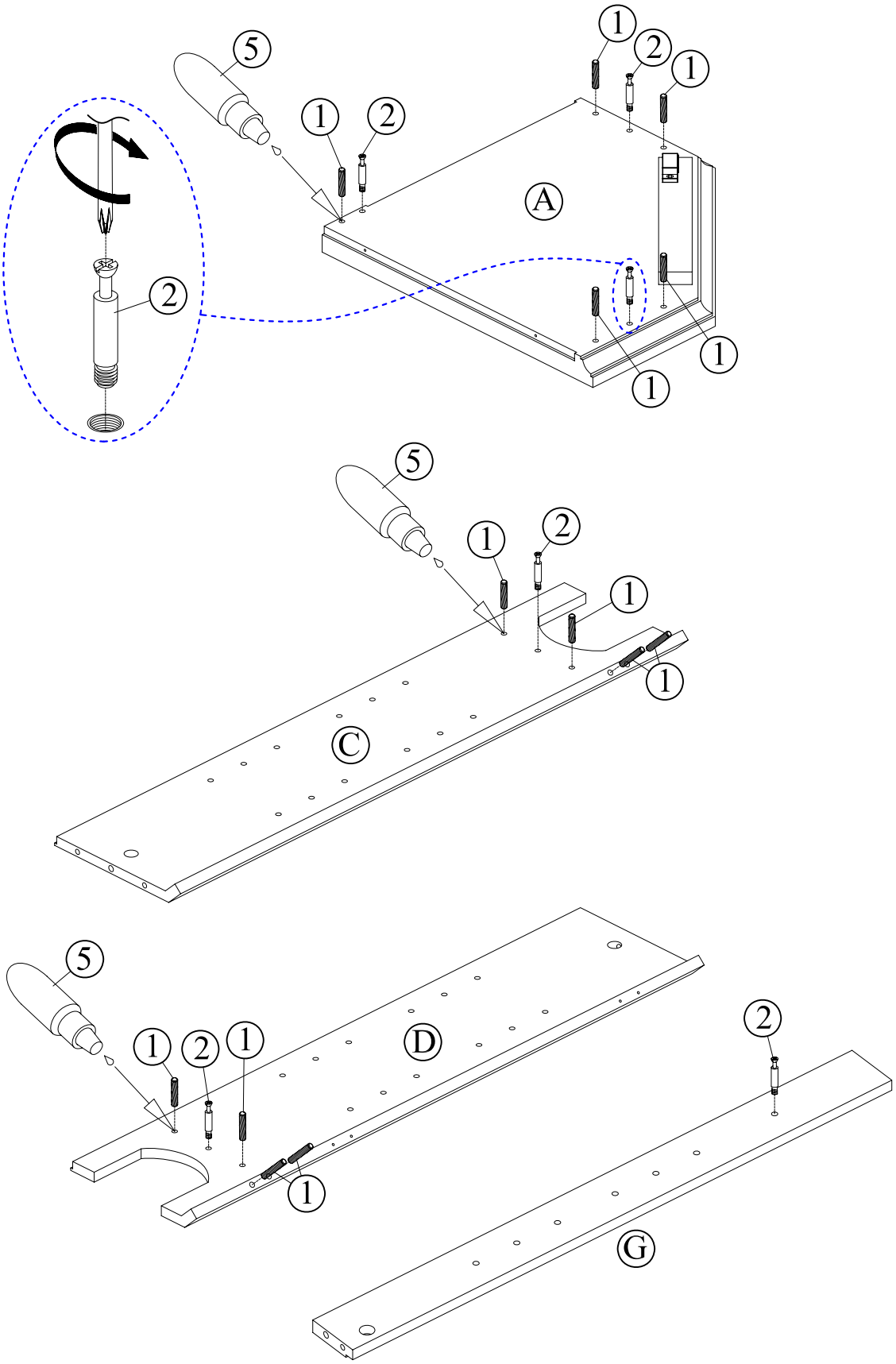

STEP 1:

1. Fill dowel hole half way with Glue #5.
   Wooden Dowel #1 may push out excess glue-wipe off excess glue.
2. Insert the Wooden Dowel #1 and the Pin #2 into the hole on the Top Shelf A and the Side Panel-Left C and the Side Panel-Right D ,tighten the Pin #2.
3. Insert the Pin #2 into the hole on the Rear Rail G,tighten the Pin #2.

2

3

1pc

4

1pc

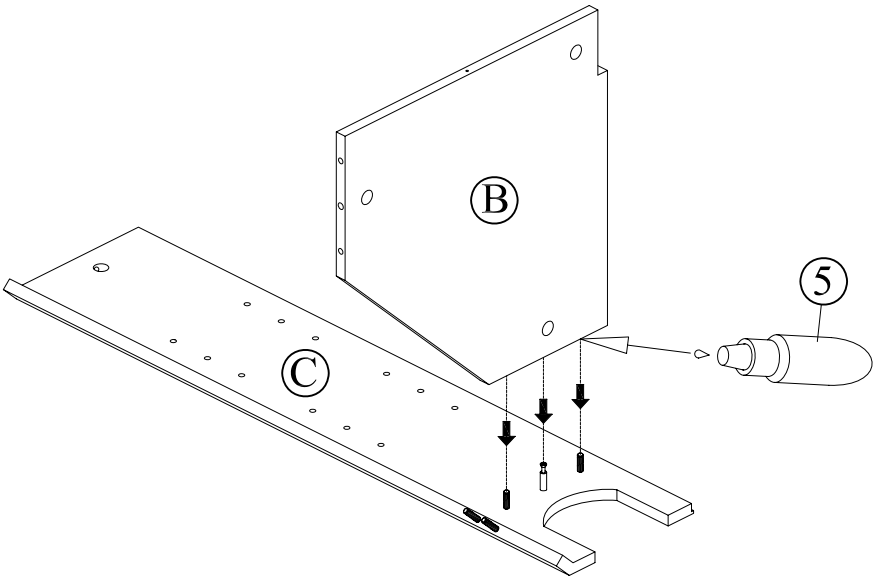

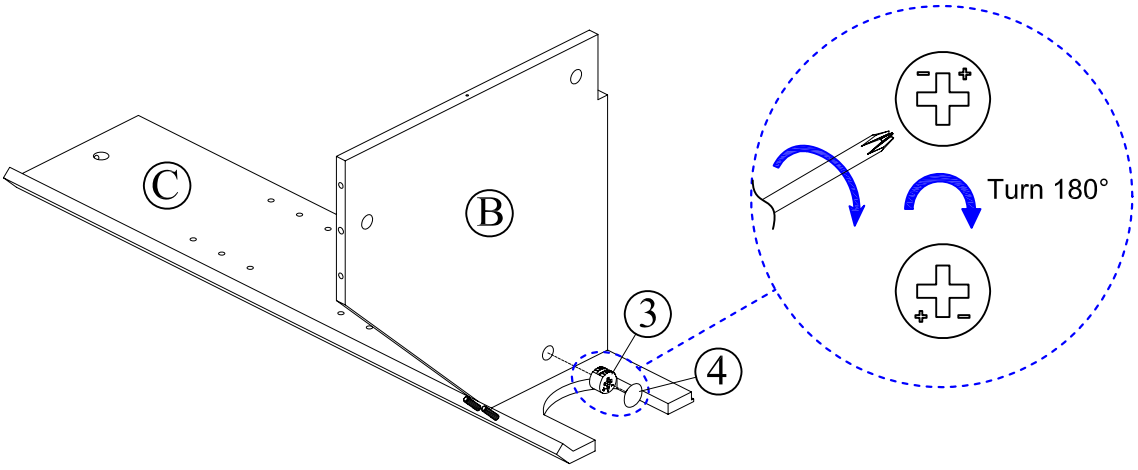

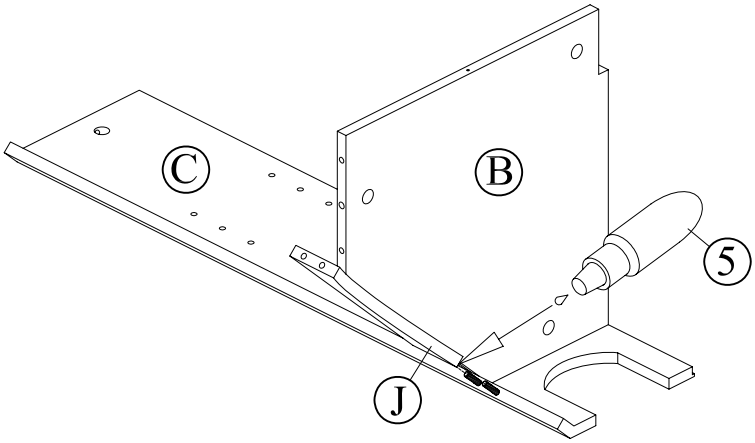

STEP 2:

1. Fill dowel hole half way with Glue #5.
   Wooden Dowel #1 may push out excess glue-wipe off excess glue.
2. Connect the Bottom Shelf B to the Side Panel-Left C with the Wooden Dowel #1 and the Pin #2.
3. Insert the Cam Lock #3 into the hole on the Bottom Shelf B.
4. Tighten the Cam Lock #3 to the Pin #2, insert the Cam Lock Cap #4 when finish.
5. Connect the Front Lower Rail J to the Side Panel-Left C with the Wooden Dowel #1.

3

3

1pc

4

1pc

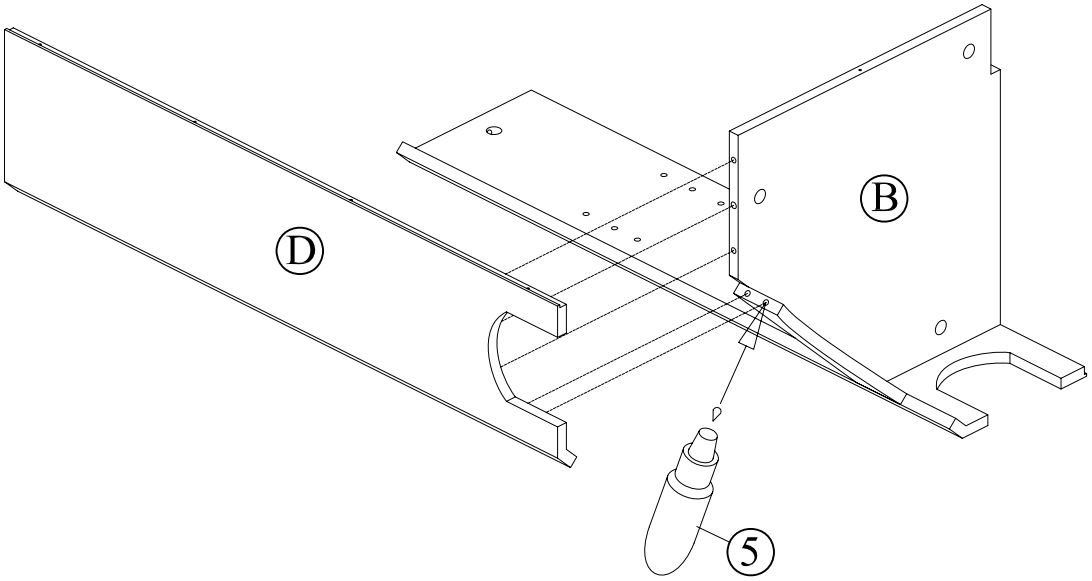

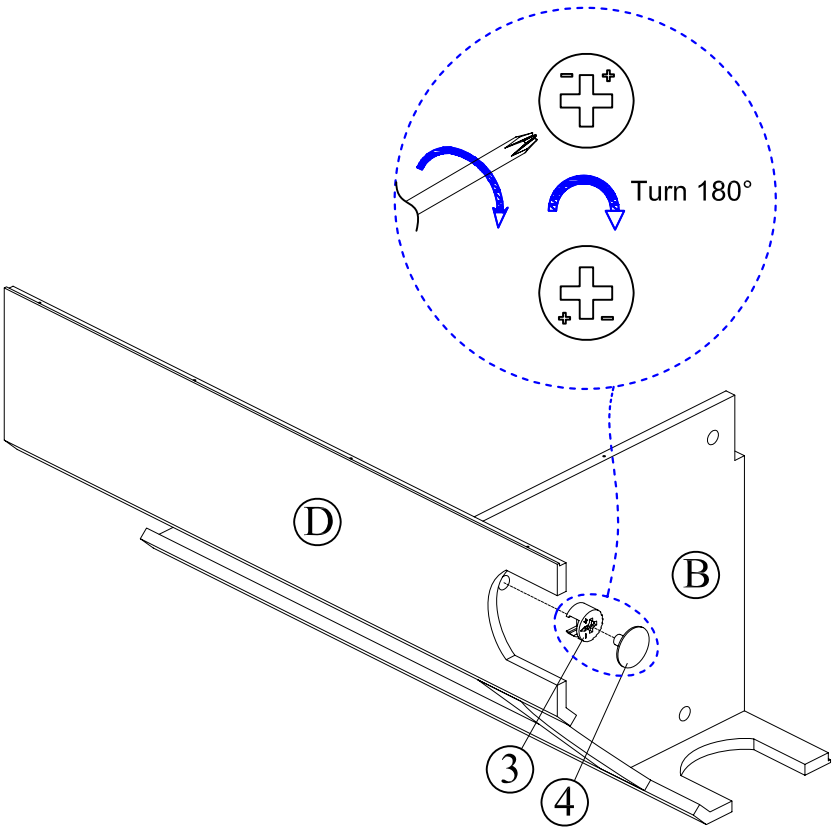

STEP 3:

1. Fill dowel hole half way with Glue #5.
   Wooden Dowel #1 may push out excess glue-wipe off excess glue.
2. Connect the Side Panel-Right D to the Bottom Shelf B and the Front Lower Rail J with the Wooden Dowel #1 and the Pin #2.
3. Insert the Cam Lock #3 into the hole on the Bottom Shelf B.
4. Tighten the Cam Lock #3 to the Pin #2, insert the Cam Lock Cap #4 when finish.

4

3

1pc

4

1pc

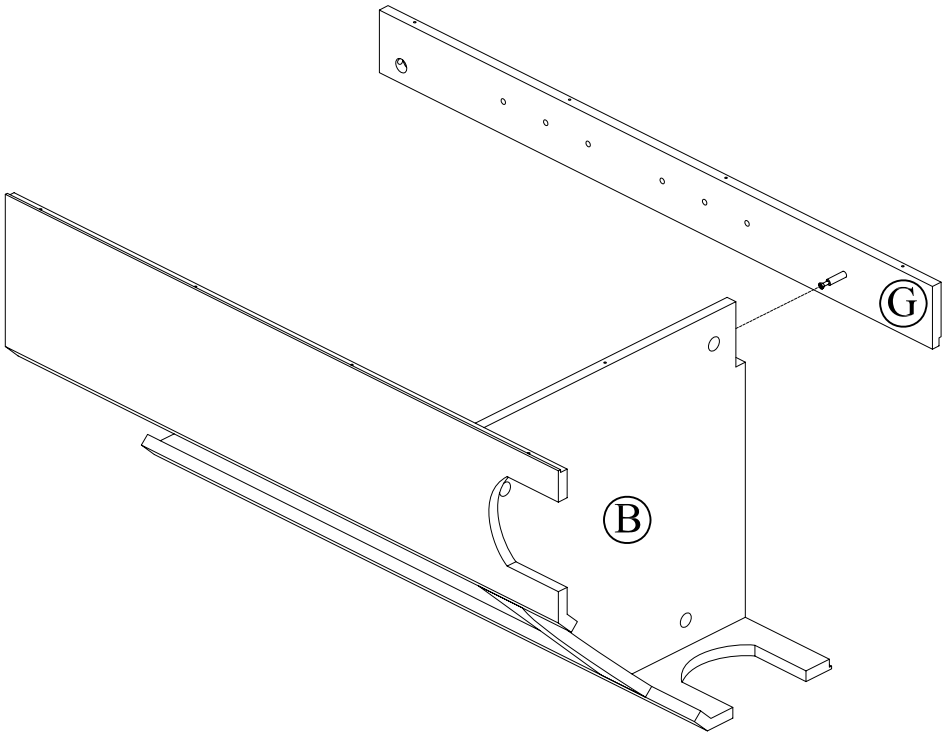

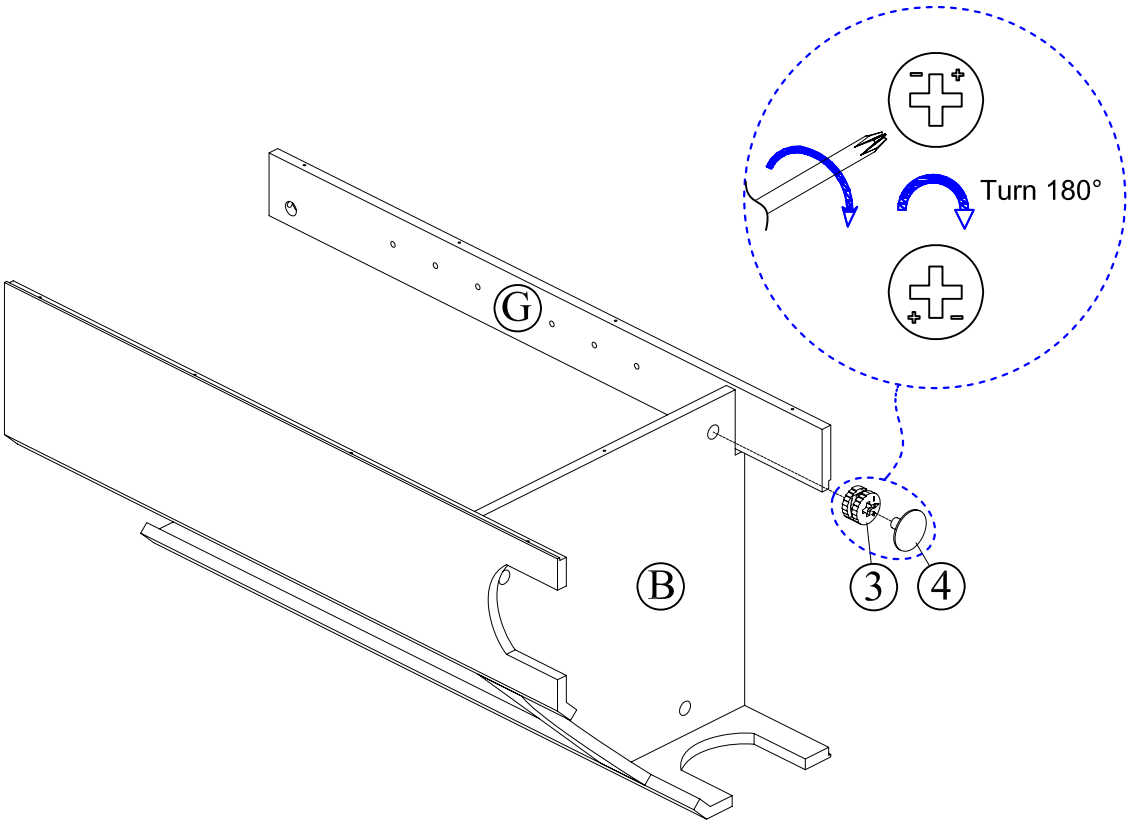

STEP 4:

1. Connect the Rear Rail G to the Bottom Shelf B with the Pin #2.
2. Insert the Cam Lock #3 into the hole on the Bottom Shelf B.
3. Tighten the Cam Lock #3 to the Pin #2, insert the Cam Lock Cap #4 when finish.

5

3

3pcs

4

3pcs

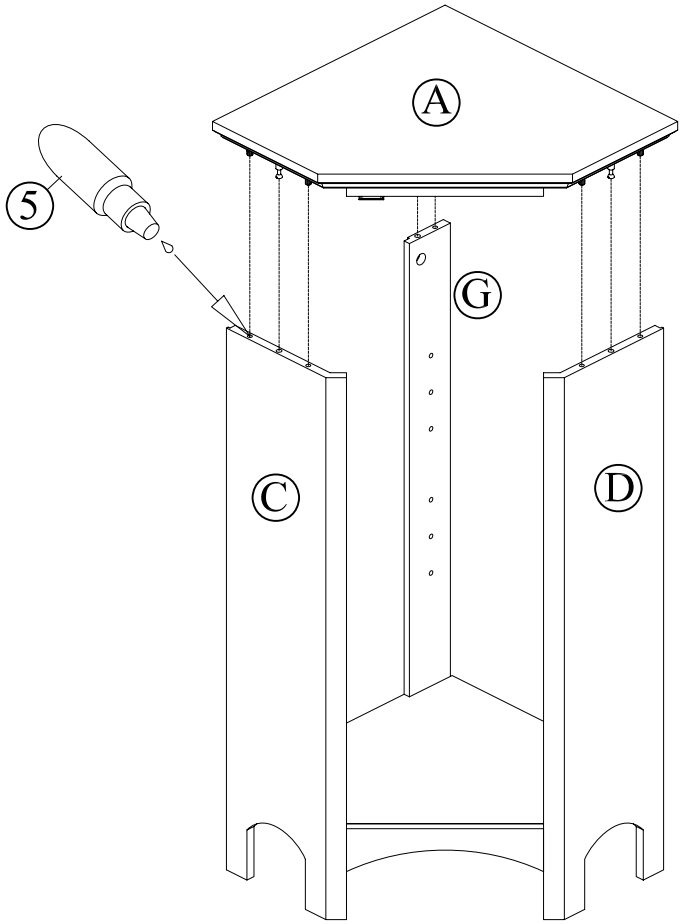

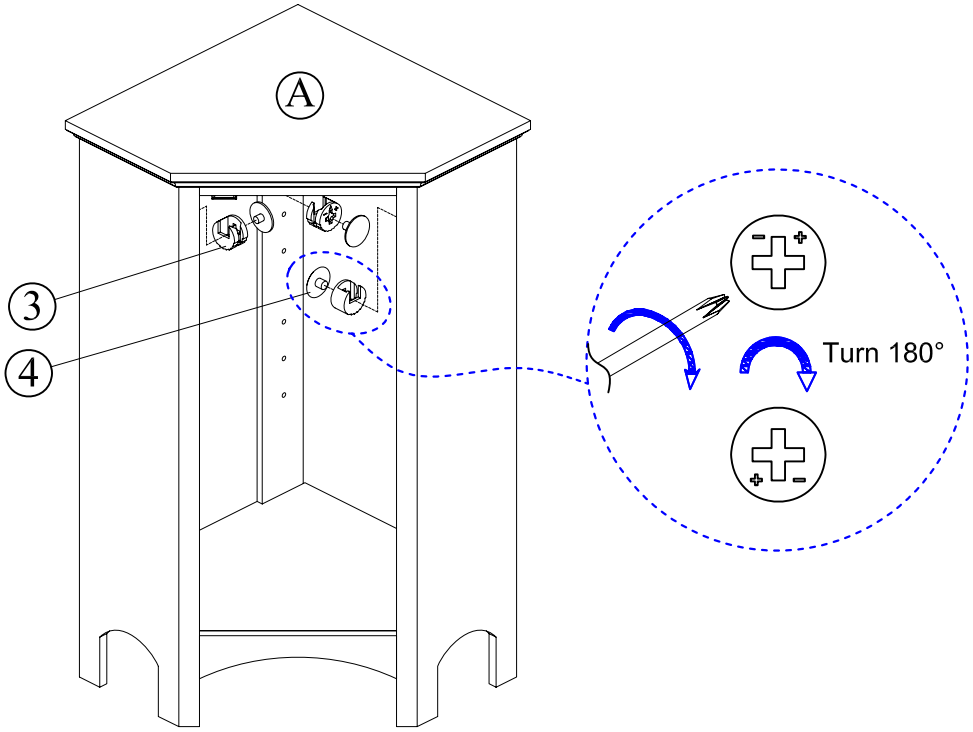

STEP 5:

1. Fill dowel hole half way with Glue #5.
   Wooden Dowel #1 may push out excess glue-wipe off excess glue.
2. Connect the Top Shelf A to the Side Panel-Left C & the Side Panel-Right D & the Rear Rail G with the Wooden Dowel #1 and the Pin #2.
3. Insert the Cam Lock #3 into the hole on the Side Panel-Left C & the Side Panel-Right D & the Rear Rail G.
4. Tighten the Cam Lock #3 to the Pin #2, insert the Cam Lock Cap #4 when finish.

6

8

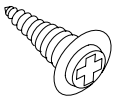

ϕ3*12 mm

22pcs

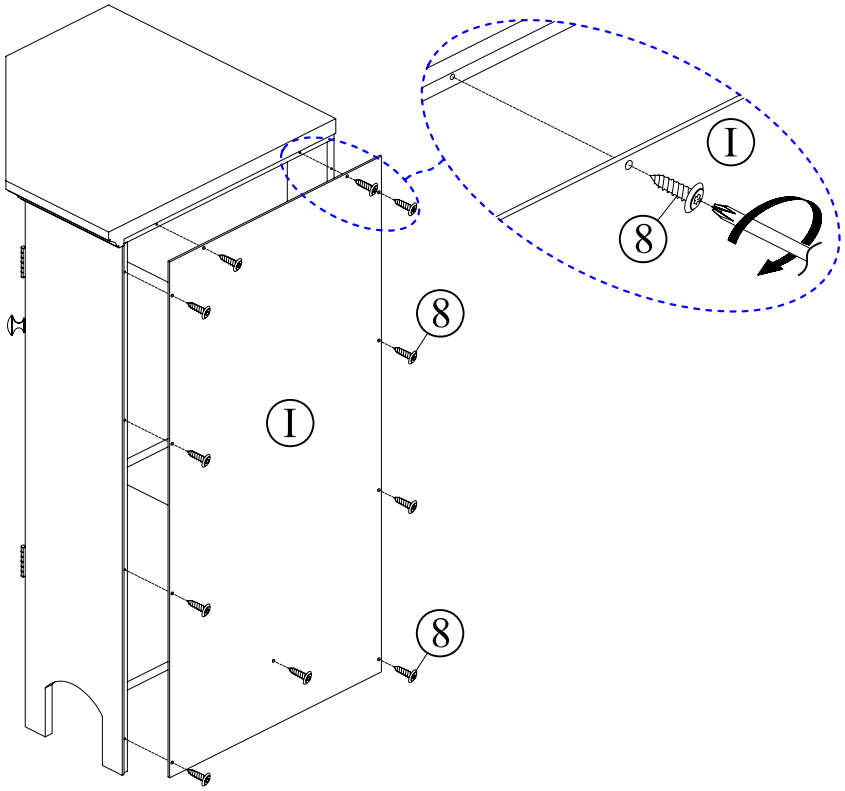

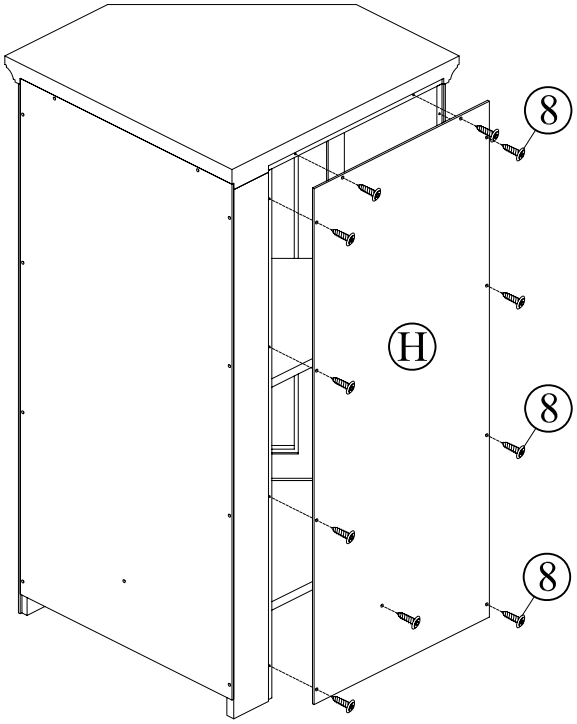

STEP 6:

1. Connect the Back Right Panel I and the main body with the Screw #8, tighten the Screw #8.
2. Connect the Back Left Panel H and the main body with the Screw #8, tighten the Screw #8.

7

6

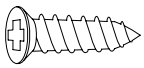

ϕ3*11 mm

4pcs

7

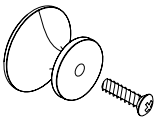

1set

9

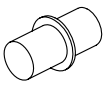

10pcs

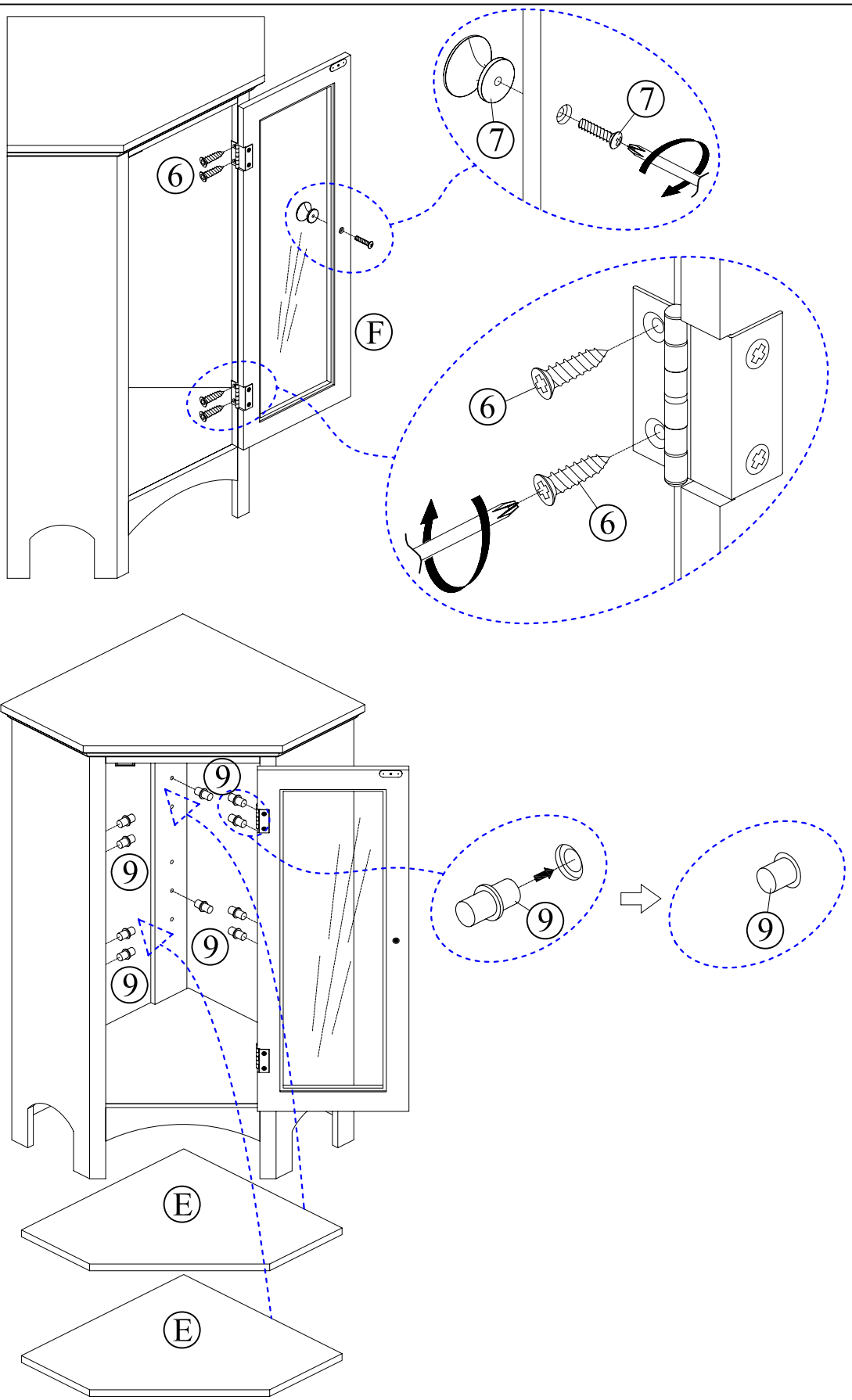

California Proposition 65 Warning

WARNING: This product may contains chemicals known to the state of california to cause cancer,and birth defects or other reproductive harm.

ADVERTENCIA: Este producto puede contener sustancias químicas conocidas en el estado de california como causantes de cáncer,defectos de nacimiento u otros daños reproductivos.

For more information: https://oehha.ca.gov/proposition-65

STEP 7:

1. Connect the Door F and the Side Panel-Right D with the Screw #6,and the Screw #6 pass through the hole on the hinge , then tighten the Screw #6.
2. Attach the Knob #7 to the Door F with the Bolt #7,then tighten the Bolt #7.
3. Insert the Shelf Pin #9 into the hole on the Side Panel-Left C and the Side Panel-Right D and the Rear Rail G.
4. Placed the Adjustable Shelf E on the Shelf Pin #9.