SHIMANO

Bantam

22BTMHR

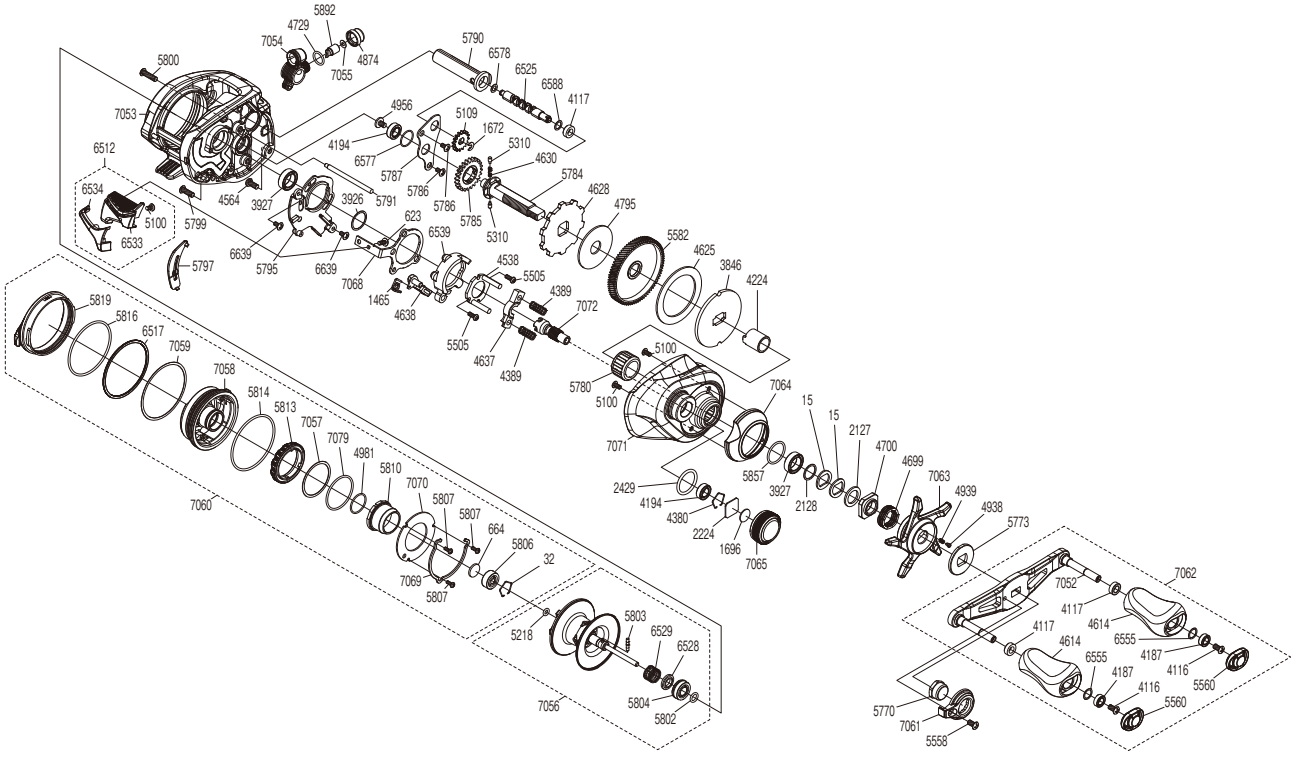

(51RL503A30X)

#	Part No.	Description	#	Part No.	Description	#	Part No.	Description
0015	10D60	Drag Spring Washer	4956	10PVT	Screw	6517	10SKT	Washer
0032	10GEW	Bearing Retainer	4981	10LA8	O Ring	6525	10EET	Worm Shaft
0623	103C0	Screw	5100	1055J	Screw	6528	10SWZ	Bushing
0664	1057S	Spacer B	5109	10FNX	Idle Gear	6529	10SJF	Bearing Pressure Spring
1465	10N1Z	Clutch Pawl Spring	5218	10EZ7	O Ring	6533	10RLD	Clutch Button
1672	105NC	E Lock	5310	10HJG	Idle Gear Pin	6534	10RNZ	Clutch Button Cover
1696	10896	Cast Control Spacer	5505	10LVJ	Screw	6539	10SX6	Clutch Cam
2127	10J1N	Star Drag Spacer	5558	10R1Q	Screw	6555	104FH	Washer
2128	105PW	Bearing Washer	5560	10FMM	Handle Knob Seal	6577	10SZ4	O Ring
2224	1085F	Cast Control Spacer	5582	1021G	Drive Gear	6578	10GFG	Washer
2429	108WK	O Ring	5770	1007H	Handle Nut	6588	100T8	Washer
3846	10D3N	Pressure Plate	5773	1007F	Star Drag Click Plate	6639	100BD	Screw
3926	10G8C	Washer	5780	1005E	Roller Clutch Bearing	7052	101PU	Handle Shank Assembly
3927	10EX8	Ball Bearing	5784	10059	Drive Shaft	7053	101PY	Frame Assembly
4116	103E9	Screw	5785	10057	Idle Gear	7054	101PW	Line Guide Pawl Holder Assembly
4117	10PXY	Bushing	5786	10MT4	Screw	7055	10T9Y	Washer
4187	104VX	Ball Bearing	5787	1005S	Drive Shaft Retainer	7056	101PX	Spool Assembly(With Bearing)
4194	105BP	Ball Bearing	5790	1005Z	Level Wind Guard	7057	10T9R	Washer
4224	10BN3	Roller Clutch Inner Tube	5791	1006J	Level Wind Guide	7058	101PV	Dial Case Assembly
4380	1057X	Retainer	5795	1001J	Clutch Guard	7059	10E72	Washer
4389	104BU	Yoke Spring	5797	1000Z	Clutch Bar Guide	7060	10E70	Left Side Plate Assembly
4538	10F42	Clutch Cam Retainer	5799	101GQ	Screw	7061	10S80	Handle Nut Plate
4564	10LZD	Screw	5800	103LN	Screw	7062	10E71	Handle Assembly
4614	10329	Handle Knob	5802	10TNF	O Ring	7063	100PT	Star Drag
4625	106XT	Drag Washer	5803	10MD0	Spool Clutch Pin	7064	100PU	Clutch Button Attachment
4628	10D6Y	Anti-Reverse Ratchet	5804	1005D	Ball Bearing	7065	10TA3	Cast Control Cap
4630	10JDX	Idle Gear Spring	5806	10S37	Ball Bearing	7068	10T9H	Clutch Plate
4637	1046T	Yoke	5807	1026U	Screw	7069	10TUC	Cam Lever Retainer
4638	105ZU	Clutch Pawl	5810	10TB6	Brake Pipe Gear Assembly	7070	10RDM	Br Dial Retainer Plate
4699	10A71	Star Drag Spring	5813	1000Y	Br Dial	7071	1019P	Right Side Plate
4700	10A0B	Star Drag Nut	5814	108WZ	O Ring	7072	100PS	Pinion Gear
4729	108WQ	O Ring	5816	1006P	O Ring	7079	10CG0	O Ring
4795	10CJ1	Drag Washer	5819	10013	Left Side Plate Cam Lever			
4874	10FJB	Pawl Cap	5857	1027V	O Ring			
4938	10B27	Click Pin	5892	10211	Line Guide Pawl			
4939	10988	Click Spring	6512	100J3	Clutch Button Assembly	4692	10LQ0	B-100 Oil (Accessory)

Please note that the number of adjusting washers may not be the same as shown in the exploded views.
(Adjustment will vary with each individual product.)

(230904)_004