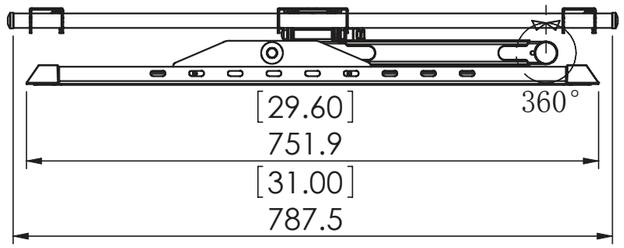

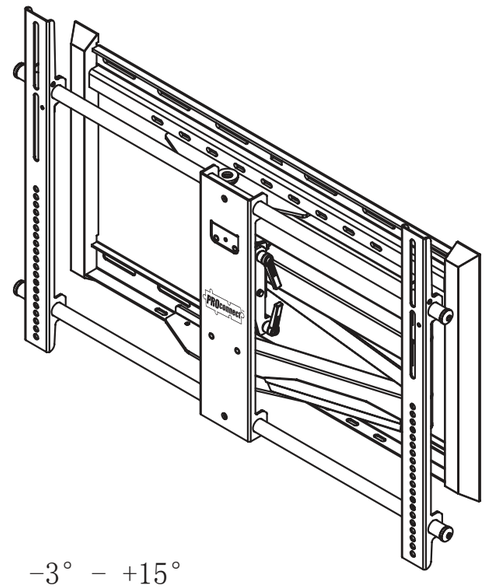

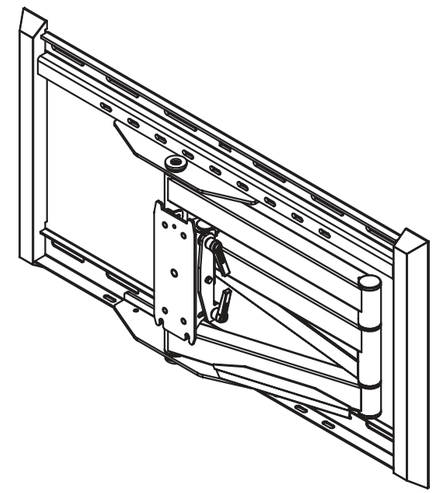

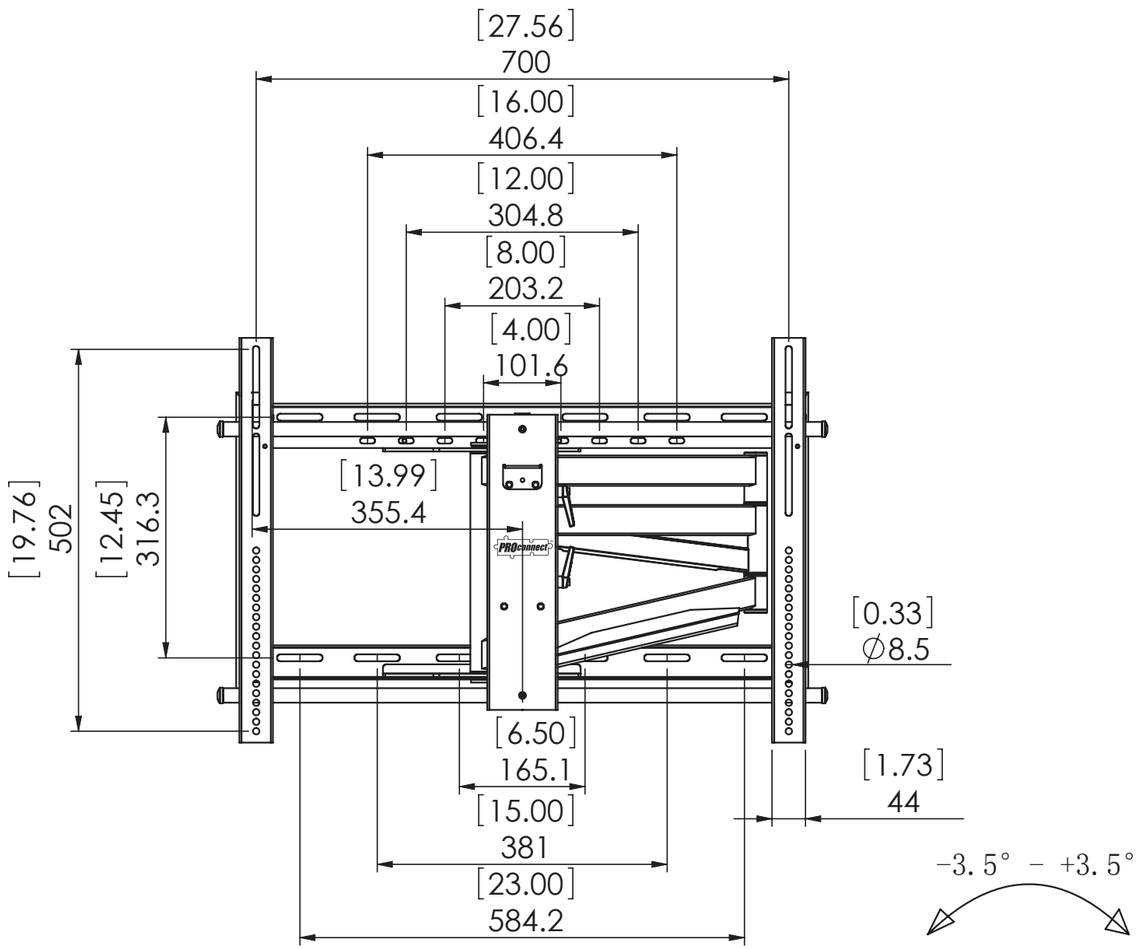

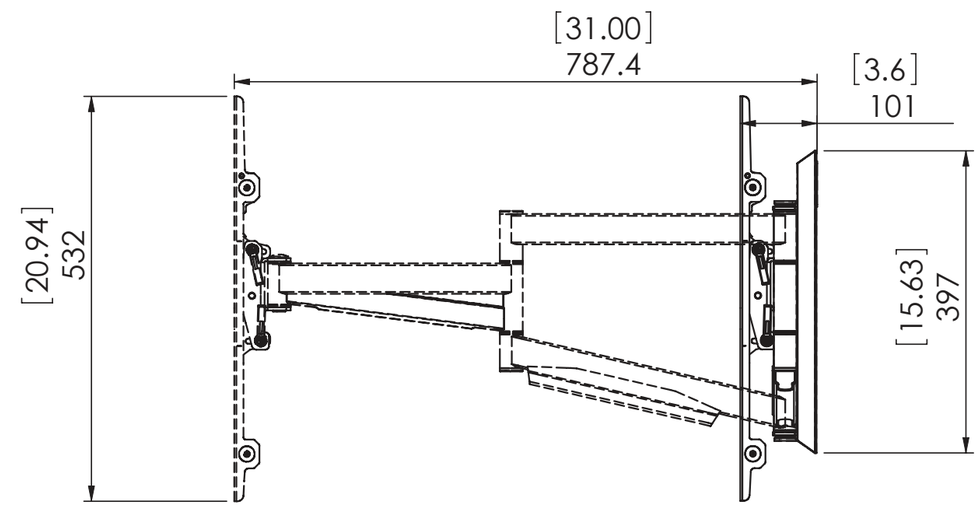

NOTES: UNLESS OTHERWISE SPECIFIED

1. VESA STANDARD COMPATABILITY (WIDTH X HEIGHT): 200X100 /200X200 200X400 / 300X400 / 400X400 /600X400/700X500
2. MAXIMUM VESA MOUNTING CONFIGURATION: 700X500 MM
3. SCREEN SIZE COMPATABILITY: MOST 42"-85" SCREENS
4. MAXIMUM WEIGHT CAPACITY: 150 LBS (68 KG)
5. 8" OF LATERAL ADJUSTMENTS
6. PRODUCT COLOR: BLACK
7. VIEWING ANGLE INCREMENTS: -3.5° , +3.5° , -3° , +15°

PCTCL15075